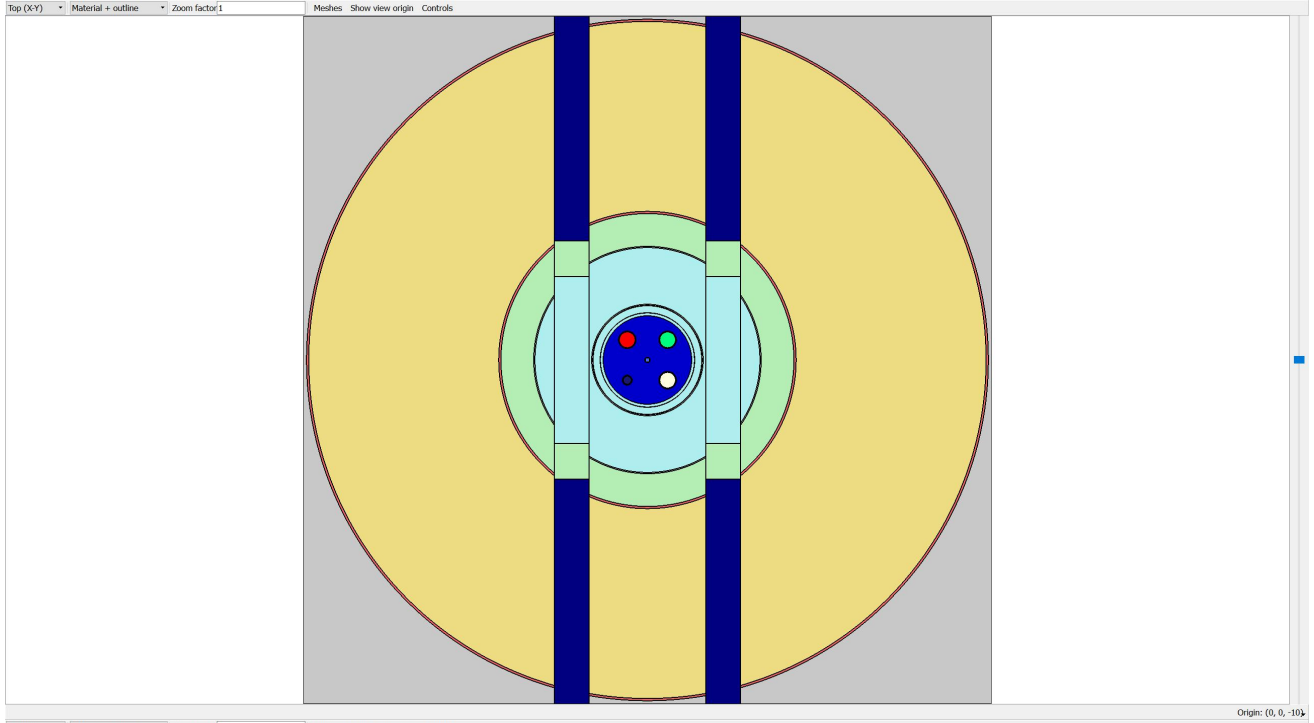

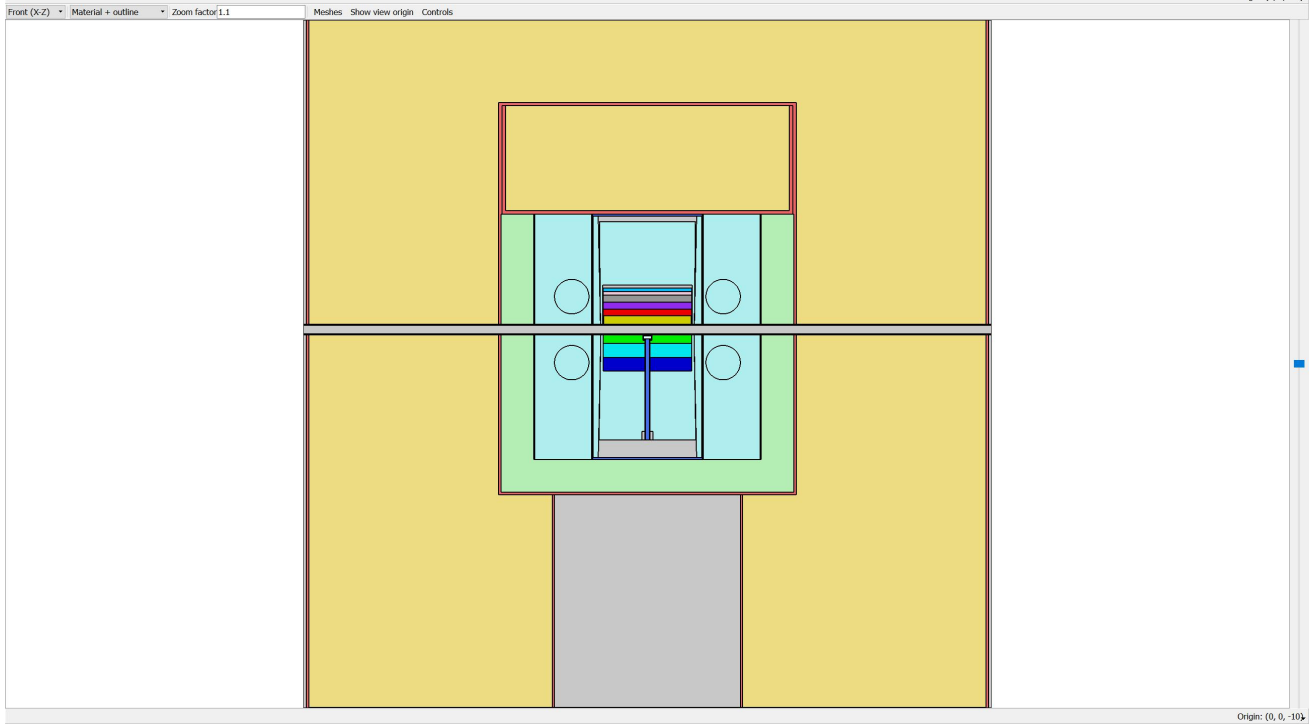

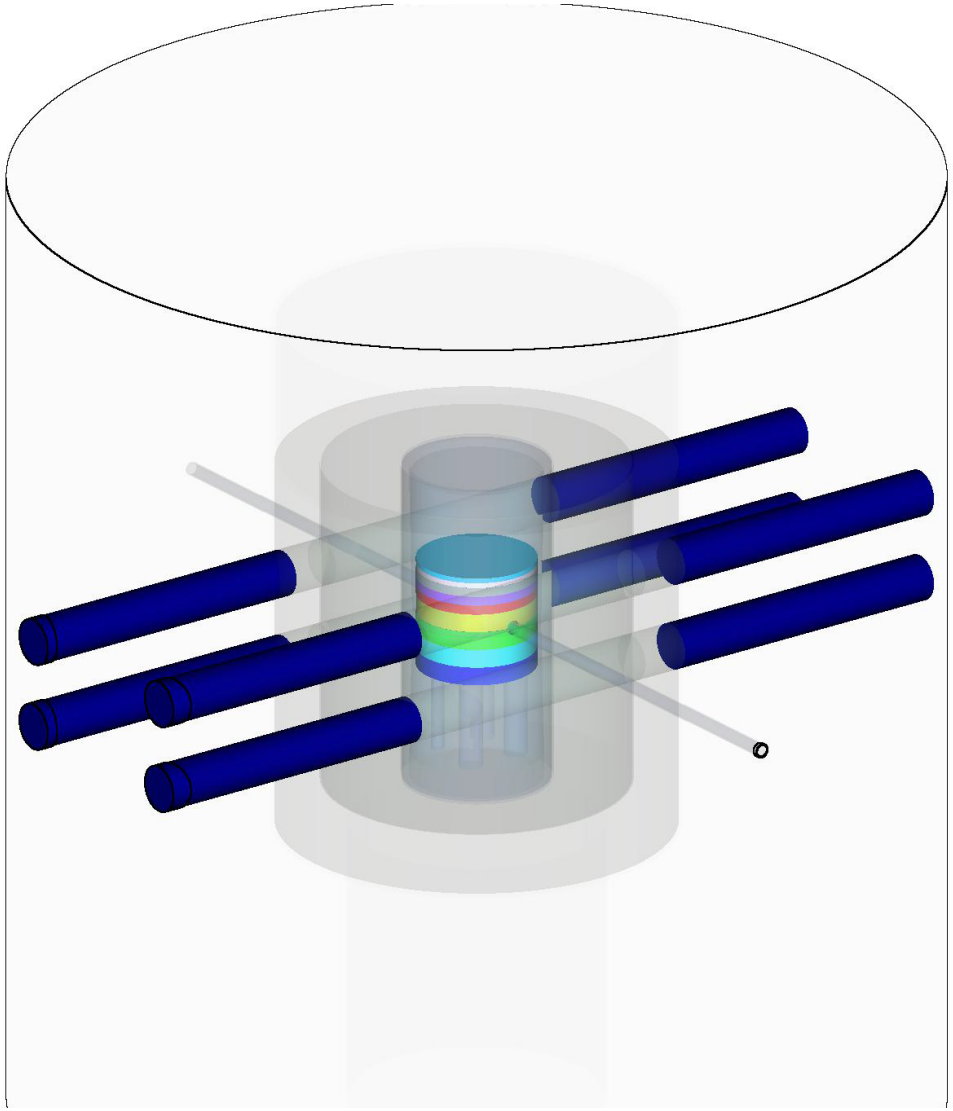

AGN-201 University of New Mexico
Larry L. Wetzel, BWXT
rendered with SCALE 6.3.12b