ornl

ORNL/TM-1999/86

OAK RIDGE
NATIONAL
LABORATORY

LOCKHEED MARTIN

Final Oak Ridge National Laboratory Site Assessment Report on the Storage of ^{233}U

P. J. Bereolos
L. K. Yong

MANAGED AND OPERATED BY
LOCKHEED MARTIN ENERGY RESEARCH CORPORATION
FOR THE UNITED STATES
DEPARTMENT OF ENERGY

ORNL-27 (3-96)

ORNL/TM-1999/86

FINAL OAK RIDGE NATIONAL LABORATORY SITE ASSESSMENT REPORT ON THE STORAGE OF ^{233}U

P. J. Bereolos
L. K. Yong

ADVANCED INTEGRATED MANAGEMENT SERVICES, INC.
702 S. Illinois Avenue, Suite B-203
Oak Ridge, TN 37830

A. R. Sadlowe
D. W. Ramey
A. M. Krichinsky

OAK RIDGE NATIONAL LABORATORY
Oak Ridge, Tennessee 37831
operated by
LOCKHEED MARTIN ENERGY RESEARCH CORP.
for the
UNITED STATES DEPARTMENT OF ENERGY
under contract DE-AC05-96OR22464

June 1999

CONTENTS

LIST OF FIGURES v
LIST OF TABLES vii
ACRONYMS AND ABBREVIATIONS ix
EXECUTIVE SUMMARY xi
1. INTRODUCTION 1
1.1 PURPOSE 1
1.2 SCOPE 1
2. BACKGROUND 5
2.1 INVENTORY 5
2.2 STORAGE TUBE VAULTS 8
2.3 P-24 TANK 11
2.4 VENTILATION SYSTEMS 11
2.4.1 Laboratory Off-Gas (LOG) System 15
2.4.2 Cell Off-Gas (COG) System 15
2.4.3 Glove Box Off-Gas (GBOG) System 17
2.4.4 Vessel Off-Gas (VOG) System 18
2.5 POWER AND ELECTRICAL 18
2.6 FACILITY AUTHORIZATION BASIS (FAB) 18
2.6.1 Current FAB 18
2.6.2 Facility Authorization Basis Update 19
2.7 VULNERABILITIES 19
3. MATERIAL AND PACKAGING ASSESSMENT 21
3.1 VULNERABILITIES 21
3.2 INITIAL ACTIVITIES 22
3.2.1 Analysis of Dropped-Container Accident Scenario 22
3.2.2 Analysis of Transfers from Tank P-24 22
3.2.3 Video Examination of Storage Tube Vault 22
3.2.4 Risk-Based Characterization 23
3.2.5 Initial Package Inspections 27
4. PLANNED INSPECTION AND REPACKAGING ACTIVITIES 35
4.1 INSPECTION PLAN 35
4.1.1 Container and Material Evaluation Strategy 35
4.1.2 Container Evaluation 36
4.1.3 Stabilization 36
4.1.4 Repackaging 36
4.1.5 Personnel 43
4.2 EQUIPMENT 43
4.3 READINESS 43
4.4 RADIOLOGICAL AND INDUSTRIAL HAZARD EVALUATION 48
5. STORAGE SYSTEM EVALUATION 50
5.1 NUCLEAR CRITICALITY SAFETY 50
5.1.1 Description 50
5.1.2 Inspections 51
5.2 RADIATION AND SHIELDING 51
5.2.1 Description 51
5.2.2 Inspections 52

LIST OF FIGURES

Fig. 1.1. Aerial view of Building 3019 3
Fig. 2.1. Building 3019 storage configuration. 9
Fig. 2.2. Cell 4 storage tube vaults. 10
Fig. 2.3. Cells 2 and 3 storage tube vaults. 12
Fig. 2.4. Tank P-24 bunker. 13
Fig. 2.5. Building 3019 ventilation systems. 16
Fig. 3.1. Results of risk model of cans in Building 3019 storage tube vaults. 26
Fig. 3.2. Unshielded containment box. 29
Fig. 3.3. RCP-10-1 outer container. 31
Fig. 3.4. RCP-10-1 and RCP-10-2 inner containers. 33
Fig. 4.1. ^{233}U package inspection paths. 37
Fig. 4.2. Inspection and repackaging plan. 40
Fig. 4.3. Shielded inspection chamber 46
Fig. 5.1. Cell 4 tube vaults off-gas manifold. 54
Fig. 5.2. Tops of empty storage tube vaults. 56
Fig. 5.3. Off-gas sampling unit 61
Fig. A.1. LANL package assembly A-1
Fig. A.2. Savannah River SRO-9 package assembly A-2
Fig. A.3. Savannah River LZB package assembly A-3
Fig. A.4. ORNL-RDF samples package assembly A-4
Fig. A.5. RCP-04 (enrichment capsule) package assembly A-5
Fig. A.6. RCP-04 (MSRE fuel can) package assembly A-6
Fig. A.7. RCP-04 (T-2 vessel heel) package assembly A-7
Fig. A.8. CEUSP package assembly A-8
Fig. A.9. Savannah River aluminum package assembly A-9
Fig. A.10. Short oxide-product can package assembly A-10
Fig. A.11. Tall oxide-product can package assembly A-11
Fig. A.12. Mound package assembly A-12
Fig. A.13. ANL-ZPR (5 packet) package assembly A-13
Fig. A.14. ANL-ZPR (12 packet) package assembly A-14
Fig. A.15. ANL-ZPR (16 packet) package assembly A-15
Fig. A.16. ANL-ZPR (metal) package assembly A-16
Fig. A.17. Oxide package assembly A-17
Fig. A.18. Oxide scrap package assembly A-18
Fig. A.19. Metal scrap package assembly A-19
Fig. A.20. ADU scrap package assembly A-20
Fig. A.21. Hanford HUA-2 package assembly A-21
Fig. A.22. LANL AUA-84 package assembly A-22
Fig. A.23. ORNL-RDF misc. samples package assembly A-23
Fig. A.24. ORNL-RDF archive samples package assembly A-24
Fig. A.25. ADU product package assembly A-25
Fig. A.26. KZA-8 package assembly A-26
Fig. A.27. ARF-32 package assembly A-27
Fig. A.28. FZA-88 package assembly A-28

LIST OF TABLES

Table 2.1. Uranium-233 in Building 3019 storage tube vaults 6
Table 3.1. Scoring of chemical and physical forms 24
Table 3.2. Scoring of packaging material 24
Table 3.3. Inspected material 27
Table 4.1. Inspection sequence 42
Table 4.2. Uranium-233 inspection and repackaging staffing requirements 44
Table 5.1. Applicability of command media to ventilation systems requirements 64
Table 5.2. Types of weaknesses in ventilation requirements 65
Table 6.1. Building 3019 upgrade requirements for ^{233}U operations 2000-2004 70

ACRONYMS AND ABBREVIATIONS

ADU	ammonium diuranate
ANL	Argonne National Laboratory
ALARA	as low as reasonably achievable
BIO	Basis for Interim Operations
CEUSP	Consolidated Edison Uranium Solidification Project
COG	Cell Off-Gas
D&D	decontamination & decomissioning
DAC	Design & Analysis Calculation
DBA	Design Basis Accident
DBE	Design Basis Earthquake
DBT	Design Basis Tornado
DNFSB	Defense Nuclear Facilities Safety Board
DOE	U.S. Department of Energy
EBE	Evaluation Basis Event
ES&H	Environmental Safety & Health
FAB	Facility Authorization Basis
FY	fiscal year
GBOG	Glove Box Off-Gas
HDBK	handbook
HEPA	High-Efficiency Particulate Air
HEU	highly enriched uranium
IP	Implementation Plan
JHE	Job Hazard Evaluation
LANL	Los Alamos National Laboratory
LOG	Laboratory Off-Gas
MCCs	Motor Control Centers
MSRE	Molten Salt Reactor Experiment
NCSA	Nuclear Criticality Safety Assessment
NDA	Nondestructive assay
NDE	Nondestructive examination
NPH	natural phenomena hazards
NDA	non-destructive analysis
NDE	non-destructive examination
ORNL	Oak Ridge National Laboratory
ORR	Operational Readiness Review
OSR	Operational Safety Requirements
PC3	Performance Category 3
POA	Plan of Action
RCV	Radiation Confinement Ventilation
RDF	Radiochemical Development Facility
SAR	Safety Analysis Report
SNM	Strategic Nuclear Material
SS	stainless steel
SSP	Safeguards and Security Plan
TSR	Technical Safety Requirements
USQD	Unreviewed Safety Question Determination

EXECUTIVE SUMMARY

This assessment characterizes the ^{233}U inventories and storage facility at Oak Ridge National Laboratory (ORNL). This assessment is a commitment in the U.S. Department of Energy (DOE) Implementation Plan (IP), "Safe Storage of Uranium-233," in response to the Defense Nuclear Facilities Safety Board's Recommendation 97-1.

The ^{233}U storage facility at ORNL is Building 3019. As of April 1999, the inventory stored in Building 3019 consisted of 446 kg of ^{233}U contained in 1410 kg of total uranium. The inventory is primarily in the form of uranium oxides; however, uranium metal and other compounds are also stored. The bulk of the inventory is contained in 1004 packages stored in tube vaults within the facility. A tank of thorium nitrate solution, the P-24 Tank, contains 0.13 kg of ^{233}U in ~4000 gal. of solution. The facility is receiving additional ^{233}U for storage from the remediation of the Molten Salt Reactor Experiment at ORNL. Consolidation of material from sites outside of ORNL with small-quantity holdings is also adding to the ^{233}U inventory. Additionally, small quantities (<50 g total) of ^{233}U are in other research facilities at ORNL.

A risk ranking process was chosen to evaluate the stored material and packages based on available package records. The risk scenario that was considered was the hypothetical failure of a package in the Building 3019 inventory. The probability of such a failure depends on packaging factors such as the package age and material of container construction. The consequence of such a failure depends on the amount and form of the material within the packages. One thousand and four packages were categorized with this methodology. The results showed 856 lower-risk packages, 147 medium-risk packages, and 1 higher-risk package.

Based on this risk ranking and operational considerations, a sample of ^{233}U containers in Building 3019 will be inspected (a) to characterize the inventory's material condition, quantity, and type and (b) to assess the condition of each type of storage container. An inspection plan has been developed that divides the inspections into two phases. In Phase I, primarily lower-risk packages will be inspected. The intent of this phase is build experience while looking at a portion of the inventory that represents a wide variety of package types. As the contents of each storage tube vault are accessed, the inventory data for each tube vault will be verified. Inspection of the containers may include smear sampling, weighing, radiography, nondestructive assay, and gamma scanning.

Equipment for the inspections is being installed in Building 3019. A shielded inspection chamber will allow examination of the cans within confinement. A laser-etching system will engrave a permanent label on the cans. A radiographic imaging system will allow the inner containers to be examined without destroying the outer packaging. A nondestructive-assay station will allow verification of the radioactive content. Preparations for an operational readiness review has been initiated, and the inspections are scheduled to begin late in fiscal year 1999.

Phase II will include both inspection and repackaging. The inspection results will be compared with the requirements of the ^{233}U storage standard, which is being developed as a part of the IP. If the material and container characteristics meet the standard, no destructive analysis will be performed, and the container will be returned to the Building 3019 storage tube vaults. Corrective actions will be taken on containers that show degradation or that do not meet the storage

A natural phenomena analysis has also been performed. The Building 3019 storage area, the supporting facility structure, and the 3020 Stack have all been analyzed and found acceptable. A walkdown of the facility identified weaknesses in the seismic resistance of portions of the GBOG system. Formal analysis was deferred, because of obvious interaction with unreinforced, partition masonry walls. The design of ventilation upgrades will address the seismic requirements.

Building 3019 has initiated an update of its Facility Authorization Basis (FAB). The result of this update will be a Safety Analysis Report and Technical Safety Requirements that are compliant with DOE Orders. These two documents are scheduled to be submitted to DOE for approval by 9/30/99.

The *DOE Environmental Safety and Health Highly Enriched Uranium Vulnerability Assessment* identified six vulnerabilities associated with ^{233}U storage at Building 3019. Three of these vulnerabilities were linked to natural phenomena. Two other vulnerabilities address potential failure of cans of ^{233}U in the tube vaults. The final vulnerability involves potential solution release from Tank P-24. A complete natural phenomena hazard analysis is being performed as part of the FAB update. One of the vulnerabilities linked to possible can failure will be corrected by performing a physical inspection of the material. The other will be corrected by employing engineered safety features to protect workers from a potential failure of cans during handling. A procedure requirement for periodic monitoring during material transfer from the P-24 tank has mitigated the third potential vulnerability.

1. INTRODUCTION

1.1 PURPOSE

The purpose of this assessment is to characterize the ^{233}U currently stored within Oak Ridge National Laboratory (ORNL) Building 3019 (Fig. 1.1) and provide information on the condition of the facilities in which this material is housed. This assessment was identified as a commitment in the U.S. Department of Energy (DOE) Implementation Plan (IP), *Safe Storage of Uranium-233* (DOE 1997), in response to Recommendation 97-1 of the Defense Nuclear Facilities Safety Board (DNFSB) (DNFSB 1997*a*). This recommendation, which addresses the safe storage of ^{233}U-bearing material, was issued by the DNFSB on Mar. 3, 1997. The U.S. Secretary of Energy accepted the DNFSB's Recommendation on Apr. 25, 1997.

1.2 SCOPE

Recommendation 97-1 describes actions that the DNFSB considers necessary to ensure the safe storage of ^{233}U-bearing materials in the interim and the longer term. Those actions are detailed in eight subrecommendations. The site assessment addresses the following four of the eight subrecommendations:

Subrecommendation 3: "Characterize the items of ^{233}U presently in storage in DOE's defense nuclear facilities as to material, quantity, and type and condition of storage container" (DNFSB 1997*a*).

Subrecommendation 4: "Evaluate the conditions and appropriateness of the vaults and other storage systems used for the ^{233}U at the DOE's defense nuclear facilities" (DNFSB 1997*a*).

Subrecommendation 5: "Assess the state of storage of the items of ^{233}U in light of the standards mentioned in recommendation 2 above" (DNFSB 1997*a*)

Subrecommendation 6: "Initiate a program to remedy any observed shortfalls in ability to maintain the items of ^{233}U in acceptable interim storage" (DNFSB 1997*a*)

Recommendation 97-1 was based on a DNFSB technical report in which the safety of ^{233}U stored at various sites in the DOE complex was evaluated (DNFSB 1997*b*). Both the Recommendation and the report acknowledged the Highly Enriched Uranium (HEU) Vulnerability Assessment (VA) conducted for DOE's Office of Environmental Safety and Health (ES&H) (DOE 1996). Because of the results of the VA, DOE was aware of the legacy issues surrounding the storage of ^{233}U-bearing materials. In addition, at the time Recommendation 97-1 was issued, the DOE was developing the HEU Vulnerability Management Plan to correct the vulnerabilities identified in the VA (DOE 1997*b*). The corrective actions identified in the Vulnerability Management Plan are incorporated within this assessment.

ORNL PHOTO 1701-98 R1

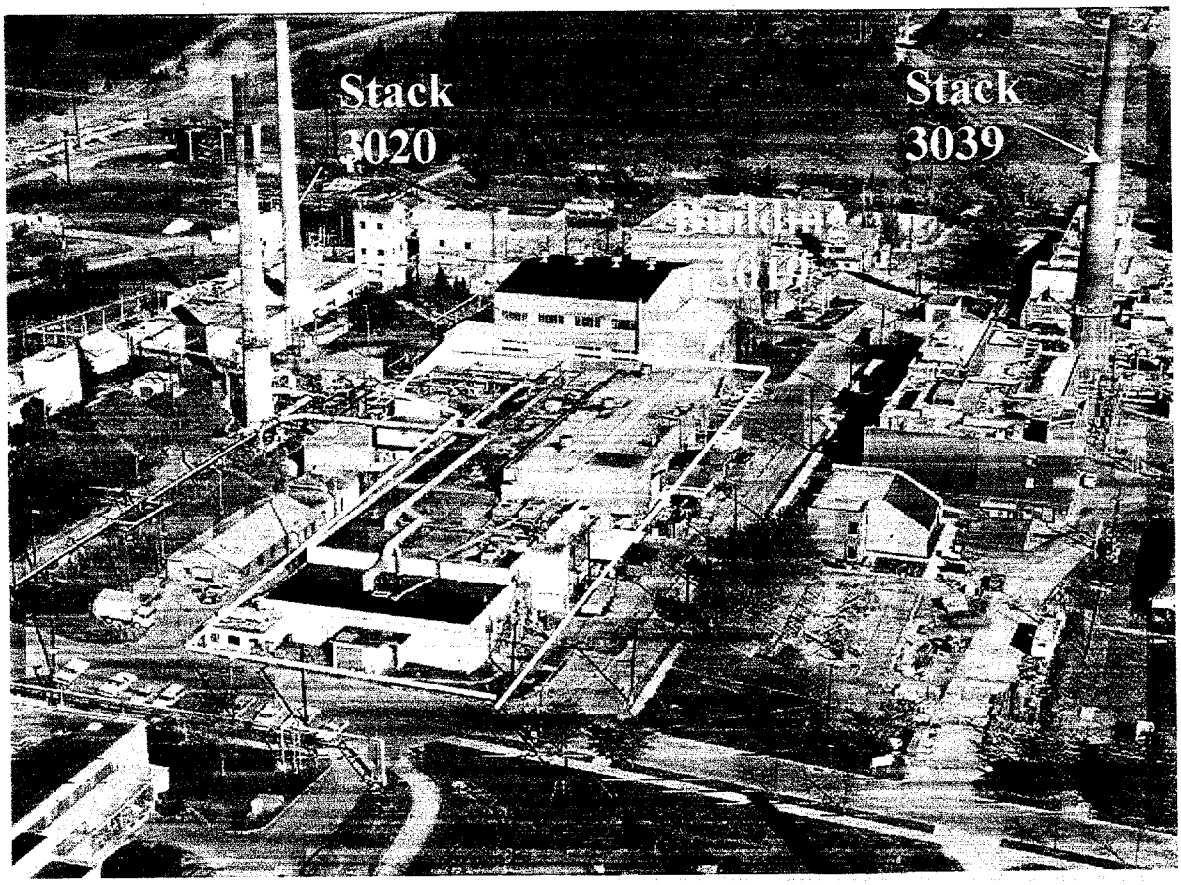

Fig. 1.1. Aerial view of Building 3019.

2. BACKGROUND

Building 3019 was built during the Manhattan Project to separate plutonium from irradiated reactor fuel and to demonstrate other nuclear fuel processes on a pilot scale (Brooksbank et al. 1994). The current mission of Building 3019 is to serve as the DOE National Repository for ^{233}U. This mission requires Building 3019 to be able to handle, store, and process multikilogram quantities of ^{233}U. ORNL has been storing ^{233}U-bearing materials since 1962 and has been operating Building 3019 in compliance with an approved Facility Authorization Basis (FAB), nuclear criticality safety program, and radiation protection program.

2.1 INVENTORY

As of April 1999, the inventory at Building 3019 consisted of 446.4 kg of ^{233}U in 1410.4 kg of total uranium. Almost all of this material is stored in 1004 outer packages located in the Building 3019 storage tube vaults (described in Sect. 2.2). In some instances, these outer packages contain multiple inner packages. The material exists in a variety of chemical and physical forms and in a variety of packages, (Table 2.1). Drawings of the packaging forms are provided in Appendix A.

Tank P-24 stores 0.13 kg of ^{233}U diluted in ~4000 gal of thorium nitrate solution. Small quantities of ^{233}U (<2 kg) for research are stored or are in process in other areas of Building 3019. A small amount of residual contamination is in historical processing equipment. The Building 3019 inventory is increasing as ^{233}U is recovered from the remediation of the Molten Salt Reactor Experiment (MSRE) and as consolidation of material from sites with small holdings of ^{233}U continues.

Uranium-233 from the MSRE is currently being recovered as part of a DOE remediation project. This material consists of 31.01 kg ^{233}U and 0.94 kg ^{235}U with a total elemental uranium mass of 37.4 kg. The uranium exists as UF_4 and is slowly being converted to UF_6 as the UF_4 reacts with radiolytically produced elemental fluorine from fluoride salts in the fuel. This UF_6 is being trapped on NaF pellets and shipped to Building 3019 for storage. These chemical traps are stored in double-contained, heavy-wall packages.

Through April 1999, 25 traps have been received at Building 3019. These traps contain 19.179 kg ^{233}U in 22.857 kg total uranium. Twenty-three of these traps are stored in the Building 3019 tube vaults. The other two traps are being stored in Cell 1, where they are monitored for pressure buildup from radiolytically generated fluorine. The first transfer of traps from Building 3019 to Building 4501, where a conversion process is being installed to stabilize this uranium as an oxide, is scheduled for the August–September 2000 timeframe.

In addition to the material being recovered from the MSRE, other small quantities of ^{233}U at ORNL are not in Building 3019. For example, the Building 3027 vault is currently holding 16 g of very high-quality (very low ^{232}U) ^{233}U. Research quantities (<1 g) of ^{233}U are contained in Buildings 3525 and 4501. Additionally, 12 kg of ^{233}U are managed as waste and are tracked in the ORNL Waste Management and Remedial Action Division waste-tracking system. This material is stored in over 5000 packages consisting of vaults, drums, and boxes.

Storage can reference figure	Material form	Package assembly identification	Package configuration	No. of outer packages	^{233}U (kg)	^{232}U (ppm)	Total U (kg)	Risk category	Initial inspection plan
Fig. A.23	U Oxide Microspheres	ORNL-RDF misc. samples	Plastic-bagged glass in cardboard within tin-plated steel	3	0.39	7	0.40	Lower	Repackage
Fig. A.24	U Oxide Powder	ORNL-RDF archive samples	Tin-plated steel over plastic bagged sample vials	9	0.70	6-10	0.71	Lower	Repackage
Fig. A.25	Ammonium Diuranate Powder	ADU Product	Tin-plated steel over plastic-bagged SS	1	0.09	7	0.10	Lower	Stabilize
Fig. A.26	UO_2 Powder	KZA-8	Tin-plated steel over tin-plated steel	1	0.19	2.5	0.20	Lower	Repackage
Fig. A.27	U Oxide Powder	ARF-32	Tin-plated steel over SS	1	0.07	7	0.08	Lower	Overpack
Fig. A.28	U_3O_8 Powder	FZA-88	Tin-plated steel over unknown	2	0.02	5	0.02	Lower	Repackage
Fig. A.29	U Foil	CZA-90	Tin-plated steel over welded SS	1	0.57	5	0.58	Lower	Stabilize
Fig. A.30	U Metal	ARF-33 Metal	Tin-plated steel over tin-plated steel	4	1.43	7	1.46	Lower	Repackage
Fig. A.31	U Oxides and U Foil	CZD-G (CZ)	Tin-plated steel over glass	1	0.09	1	0.09	Lower	Stabilize
Fig. A.32	U Foil	CZD-G (CX)	Tin-plated steel over plastic	1	0.01	6	0.01	Lower	Stabilize
Fig. A.33	U Metal	SNM-4031	Tin-plated steel over glass	1	0.03	1	0.03	Lower	Repackage
Fig. A.34	U Metal Button & Plates	CZA-93(U-233-4)	Tin-plated steel over glass	1	1.25	5	1.28	Lower	Repackage
Fig. A.34	Oxides & Metal Pieces & Foil	CZA-93(U-233-5)	Welded SS over tin-plated steel	1	1.06	42	1.08	Lower	Stabilize
Fig. A.35	U Metal	AUA-84 (Jar)	Welded SS over unknown	2	0.46	8	0.47	Lower	Repackage
Fig. A.36	U Metal	CZA-91	Tin-plated steel over welded SS	1	0.86	42	0.88	Lower	Overpack
Fig. A.37	U Metal	KZA-G1B	Welded SS in welded SS	3	0.24	5	0.24	Lower	NDE
Fig. A.38	U Metal	SNM-9514 & LAE-03	Tin-plated steel over unknown	2	0.02	50	0.02	Lower	Repackage
Fig. A.39	U Metal	LAW-40	Tin-plated steel over plastic	1	0.52	4	0.53	Lower	Repackage
Fig. A.40	U Oxide Powder	PZA-126	SS in welded SS	1	0.28	1	0.28	Lower	NDE
Fig. A.41	U Oxide Powder	ARF-33 Oxide	SS in SS	2	1.21	7	1.24	Lower	NDE
Fig. A.42	U Oxide Powder	ASA-94 (233-1,2,3-74)	Tin-plated steel over plastic	3	1.43	7	1.46	Lower	Repackage
Fig. A.43	U Oxide Powder	ASA-94 (233-4-74)	Tin-plated steel over tin-plated steel	1	0.24	7	0.24	Lower	Repackage
Fig. A.44	UO_2 Powder	CZA-92	Welded SS in welded SS	1	2.25	5	2.29	Lower	NDE
Fig. A.45	U Oxide Powder	LZB-18	Tin-plated steel over welded SS	3	1.04	7	1.06	Lower	Overpack
Fig. A.46	U Oxide Microspheres	MM-4899	Tin-plated steel over glass	1	0.13	7	0.14	Lower	Repackage
Fig. A.47	UF_4 Powder	CZD-G (CY)	Tin-plated steel over glass	1	0.02	70	0.02	Lower	Stabilize
Totals				1004	425.83		1386.15		

[a]as of 4/30/99. Does not include material recovered from MSRE. The MSRE material will become part of the scope of Recommendation 97-1 when it is stabilized.

ORNL DWG 99-4805

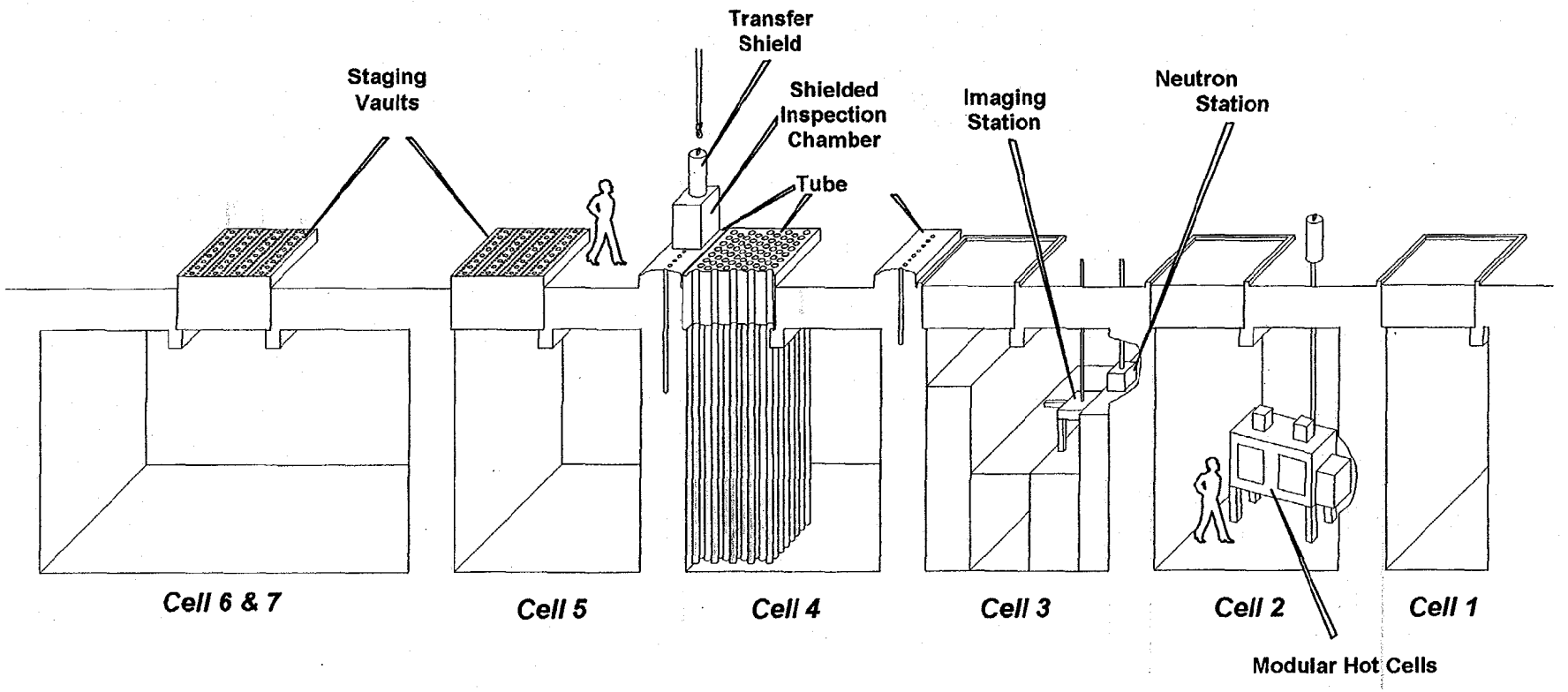

Fig. 2.1. Building 3019 storage configuration.

The tube vaults between Cells 3 and 4 and between Cells 4 and 5 are single rows of tube vaults positioned ~3 in. from the center plane of the between-cell shield walls. The off-center placement avoids a construction joint located in the center plane of the concrete wall that is equidistant from the cell interiors. The tube vaults between Cells 2 and 3 are oriented in two rows in a nominal 18-in. triangular pattern, with each row being closer to the adjacent cell interior (Fig. 2.3). Therefore, for this positioning, the concrete walls did not provide shielding sufficient for high gamma radiation. Thus, larger holes were drilled, and lead shot was added to the annulus surrounding the storage tubes to augment shielding.

Cans containing ^{233}U-bearing materials are placed into or retrieved from the storage tube vaults by one of several types of lifting or handling devices that are actuated by vacuum, electromagnet, or mechanical linkage (or a combination of actuators). These devices can be used also to transfer cans to a shielded transfer cask. A 10-ton crane provides the means for moving the shielded transfer cask within the Penthouse.

2.3 P-24 TANK

In addition to the tube vaults, which store ^{233}U in solid form, a small amount of ^{233}U is stored in thorium nitrate solution in tank P-24. This 9-ft-diam. tank with ellipsoidal heads has a capacity of 10,000 gal and is oriented horizontally below ground level. The tank currently contains ~4,000 gal of thorium nitrate solution contaminated with 0.1 kg of ^{233}U. It is recognized that solutions are an unacceptable form for long-term storage.

Tank P-24 is located in a bunker external to Building 3019 (Fig 2.4). The bunker consists of 16-in.-thick concrete walls and 12-in.-thick roof plugs. Two spare tanks, P-23 (10,000 gal) and P-25 (5,000 gal) also occupy the bunker and are available for backup storage. The bunker is equipped with a sump and is vented through the VOG system.

2.4 VENTILATION SYSTEMS

Building 3019 is ventilated by four off-gas systems designated as the *ventilation confinement network* (Fig. 2.5): (1) Laboratory Off-Gas system (LOG), (2) Cell Off-Gas system (COG), (3) Glove Box Off-Gas system (GBOG), and (4) VOG. This network is designed to confine radioactive materials within the radiochemical laboratories, hot cells, glove boxes, process cells, vessels, and storage tube vaults. Only the GBOG is considered a candidate safety class system.

In high specific-alpha-activity nuclear facilities, it is a customary and safe practice to maintain reliable ventilation that causes air to flow from areas of low (potential) contamination to areas of higher (potential) contamination before high-efficiency particulate air (HEPA) filtration, ES&H monitoring, and discharge to the environment. At Building 3019, air is continuously drawn from outdoors into the building's secondary confinement structure and on through primary confinement boundaries. Air is exhausted through the network of ventilation systems composed of ductwork headers, HEPA filters, ES&H monitors, and discharged primarily to Stack 3020.

ORNL PHOTO 1702-98

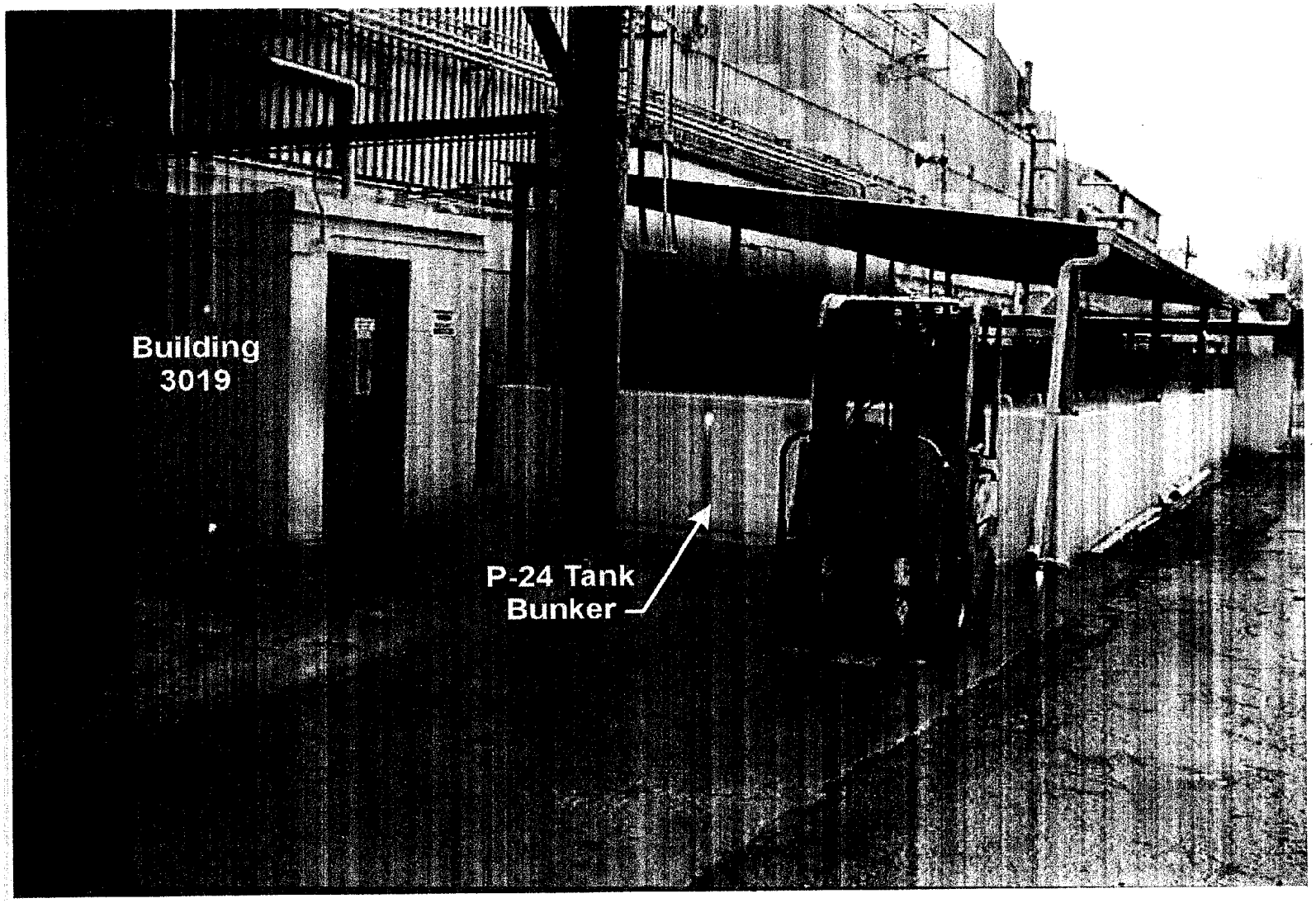

Fig. 2.4. Tank P-24 bunker.

2.4.1 Laboratory Off-Gas (LOG) System

The LOG system primarily routes exhaust from the Building 3019 laboratory hoods to the inlet of Filter House 3108. The LOG System parallels and is connected to the COG system (see Sect. 2.4.2) at about the mid-roof point. This connection was originally installed to allow the COG system to provide exhaust ventilation service to the areas normally served by the LOG system, while the replacement of the LOG fans and ductwork was performed as part of the Stack 3020 Improvement Project, which was completed in 1985. The cross-connect duct now serves permanently as the normal and emergency cross-connect duct between the two systems.

2.4.2 Cell Off-Gas (COG) System

The COG system is located at the middle and east end of Building 3019 and serves as the central collection for the process cell effluent. This service begins with a rectangular concrete duct that serves as an exhaust plenum for the seven remote process cells in the building. The concrete duct is formed on the top of the process cells and runs from the west end of Cell 7 to just east of Cell 1. The concrete duct is connected to a carbon-steel duct, which directs exhaust to the east side of Stack 3020 via HEPA filters located in Filter House 3091.

As cited in Sect. 2.4.1, the COG and LOG systems are connected at the midcell location. Although these two systems are distinct in their physical locations and discharge paths, many common areas are essentially served by both the LOG and COG systems because of the infiltration occurring between adjacent areas within Building 3019.

Two electrically driven fans, installed in parallel for redundancy, are located in each of these two systems downstream of their respective filter houses. One fan in the COG system and one fan in the LOG system are normally operated, and the second fan in each system serves as a backup.

2.4.3 Glove Box Off-Gas (GBOG) System

The GBOG system, which was installed in Building 3019 during the early 1970s to provide HEPA- filtered exhaust ventilation from the glove boxes in which radioactive materials were processed. The GBOG system consists of ductwork, valves, dampers, filters, and fans that provide exhaust ventilation from glove boxes located throughout the Building 3019 complex and discharges to Stack 3020. The main GBOG header, which is on the roof of Building 3019, directs the flow from two branch headers to the GBOG final filter. In addition, a connection from the Building 3100 branch header joins the main header; however, no glove boxes are currently connected to this branch. The main header was installed with a steam-heating coil, which is no longer functional and is disconnected from the steam supply.

HEPA filters, located at each glove-box outlet, provide initial filtration of the air leaving the glove boxes. Dampers installed throughout the system provide manual shutoff and volume adjustment capability in all major portions of the system to allow a diverse array of operating and maintenance configurations. Back-pressure dampers are provided in the discharge duct of each fan to minimize flow reversals in case of improper pressure differentials or upset conditions. The GBOG system provides vacuum relief to the glove boxes via two vacuum-relief valves installed between the first and final stage of HEPA filtration. Should the header vacuum exceed the set-point value, the relief valve lifts off its seat and allows the inflow of air, thus relieving the high-vacuum condition. Inlet air to the relief valves is HEPA filtered. A fire barrier is installed in each of the final filter housing inlet ducts. These fire barriers provide flame-arresting capability to prevent damage to the final HEPA filter media should a fire or explosion occur in the GBOG system.

The GBOG system was modified in 1998 to install a new HEPA filter bank inside Room 145, which is within the building secondary confinement boundary. This modification also provided a new ductwork header in Rooms 145 and 147 along with connections available for future processing systems to be installed in Cells 1–3. The new HEPA filter bank consists of three parallel HEPA filtration units, with each unit having two HEPA filtration stages arranged in series. This configuration provides redundancy and permits maintenance activities (e.g., such as filter changeout and in-place leak-testing), without terminating ongoing operations. Instrumentation has been provided to monitor pre- and postfiltration-system static vacuum, filter differential pressure, air mass flow, and temperature measurements. In addition, a beta-gamma monitor was positioned on the north wall of Room 145 to measure the dose rate (if any) in the area of the HEPA filter banks. The filtration units are constructed of SS. The units were connected to the GBOG system east branch in Room 145 after the primary HEPA filter bank.

Three fans service the GBOG. One fan operates, one fan is in standby mode, and one fan is off-line. The functionality of the three fans is rotated on a monthly basis. One redundancy feature incorporates the use of two motor control centers (MCCs). With this arrangement, should one MCC lose power, the system turns on the standby fan that is served by the other MCC. (Functional rotation of the three fans is done in a manner that ensures that both the operating and standby fans are not powered by the same MCC.) The control system for the GBOG is designed such that each fan has its own control system. The failure of one fan's control system will not affect the others. A Photohelic® device performs the automatic transfer of normal to standby fans. There are three such devices, one to serve each of the three fans. The GBOB system also includes

1999. These documents are reviewed on an annual basis and updated, as necessary, to incorporate changes to the facility configuration or operations. The 1999 revisions currently are in the process of being implemented at the facility.

Changes are subjected to the Safety Evaluation/Unreviewed Safety Question Determination (USQD) process as they occur. Several new USQDs are being prepared to specifically address activities associated with the inspection and repackaging effort. The first USQD address the removal of some existing pieces of equipment from Cell 3, installation of the inspection equipment on the mezzanine level of Cell 3, the core drilling of holes in the roofs of Cells 2 and 3, and the installation of transfer chutes in the cells. Two additional USQDs address testing of the Cell 3 nondestructive examination (NDE) and nondestructive assay (NDA) equipment. The final two USQDs address inspection operations and repackaging operations, respectively.

2.6.2 Facility Authorization Basis Update

Since the BIO is intended as an interim document, Building 3019 has initiated an update of its FAB. The result of this update will be a Safety Analysis Report (SAR) that is compliant with DOE Order 5480.23 and Technical Safety Requirements (TSR) that are compliant with DOE Order 5480.22. These two documents are scheduled to be submitted to DOE for approval by September 30, 1999.

2.7 VULNERABILITIES

The DOE *ES&H Highly Enriched Uranium Vulnerability Assessment* identified six vulnerabilities in the Building 3019 complex (DOE 1996). Three of the vulnerabilities focus on potential failures caused by natural phenomena. Two additional vulnerabilities address potential failures of packages containing ^{233}U. The remaining vulnerability is the potential for leakage from Tank P-24 during solution transfer. Each vulnerability is relevant to the material, containers, or the storage system. The details and planned corrective actions for the natural phenomena vulnerabilities are discussed in the facility evaluation (Sect. 5). The other three vulnerabilities and the respective corrective actions are described in the material and packaging assessment (Sect. 3).

3. MATERIAL AND PACKAGING ASSESSMENT

The third subrecommendation from the DNFSB is to characterize the items of ^{233}U currently in storage in DOE's defense nuclear facilities in terms of material, quantity, and type and condition of storage. At ORNL, a two-pronged approach is being taken to this characterization: (1) analysis of risk scenarios and investigation of material and packaging records and (2) physical inspection of the material in the tube vaults.

The first portion of the assessment has been completed. An analysis of risk scenarios has been done as a part of the corrective actions identified in the *DOE Vulnerability Management Plan* (DOE 1997b). Investigation of material receipts and inventory records was used to rank the relative risk of each can in storage. This information will be used as input to the planning for physical inspections.

The physical inspections will consist of opening the Building 3019 storage tube vaults and examining a sampling of the stored packages. The package conditions will be evaluated, compared to a storage standard, and repackaged, as required. The details of the inspection and repackaging plan are discussed in Sect. 4.

3.1 VULNERABILITIES

Three vulnerabilities were identified in the DOE *ES&H Highly Enriched Uranium Vulnerability Assessment* for situations in which ^{233}U could be released from its place in storage by methods not involving natural phenomena. Two vulnerabilities address failure of cans of ^{233}U in the tube vaults. The third involves release from Tank P-24.

One material/packaging vulnerability is a potential container failure within a storage tube vault. This failure might be caused by corrosion from long periods of storage or by overpressurization resulting from radiation effects on the materials inside the can. Because of the lack of shielded inspection capabilities, most packages have not been removed since they were placed in the tube vaults. The longest dormant storage time is 34 years. The average is 16 years. A physical inspection of the material (with subsequent overpacking and repackaging, as necessary) will be the corrective action to this vulnerability.

The other vulnerability associated with containers of ^{233}U is the possibility that a deteriorated container could fail while being handled. The most likely scenario for such an event could occur if the container were dropped while being lifted from a tube vault. This vulnerability, which is more of an operational issue than a storage issue, which is being addressed in the Building 3019 safety basis and inspection equipment preparations.

A vulnerability associated with the P-24 tank is the potential of a spill during solution transfer. At some time in the future, it may be necessary to pump the entire liquid contents of P-24 into an adjoining tank or even into a nearby temporary tank. If the transfer were to be performed unattended and a leak in the line were to develop, the entire contents could be released to the environment as they are pumped. This vulnerability is being addressed through procedural controls discussed in Sect. 3.2.2.

arrangement consists of a canister followed by spacers followed by another canister and spacers. The only exception to this arrangement is with the CEUSP canisters. Because of this configuration in most tube vaults, no useful information can be obtained from this type of video examination.

To use this technique in the storage tube vaults where the CEUSP material is stored, each canister would need to be forced to the one side of the tube vault to provide a straight-path, off-centered annulus for the camera. Because the CEUSP canisters are quite heavy (~30 kg), it would be very difficult to position more than two or three canisters to insert the camera. Even positioning only one canister may actually damage the canister side wall during movement. Furthermore, such a tight configuration would result in the camera lens virtually touching the canister sides, which would severely limit the field of view and possibly degrade image resolution.

In conclusion, the camera provided a good view of the cans in testing. However, difficulty was encountered in sliding the camera past objects (e.g., spacers) in the tube vaults. The only tube vaults without spacers contain cans that will be difficult to move to allow the camera to provide a useful view of canister side walls within the tube. During the planned inspections of containers, a video examination of the top of each can will be conducted prior to lifting the container from the tube vault.

3.2.4 Risk-Based Characterization

A process analogous to risk assessment was chosen as the approach to material and packaging characterization. The "accident" scenario was considered the failure of a package (or a group of similar packages) in the Building 3019 inventory. The probability of such a failure was related to packaging factors such as the age and material of construction of the cans. The consequence of such a failure was related to the amount and form of the material within the packages.

Each group of packages was assigned a material score and a packaging score as the principal, first-order, components to risk. Other factors may contribute to risk, but are considered of lesser importance. These two scores were then combined to give the risk of each packaging group. The intention was not to assign an absolute risk factor to each group of packages, but to establish a relative risk ranking of the cans. This information will be input for decisions regarding inspection, repackaging, and storage of the material.

3.2.4.1 Material Factor

The material factor was based on four items: quantity of material, amount of ^{232}U impurity, chemical form, and physical form. All items were given scores, which were then combined to give a material factor for each package group. Lower factors correspond to lower consequence. Scoring was calculated as follows

- Quantity of ^{233}U per can = mass in kilograms. For groups of similar packages, the average quantity per can was used.

- Amount of ^{232}U impurity = (ppm ^{232}U/25) + 1. The basis for this expression was that at 25 ppm, the inhalation hazard from ^{232}U and its decay products is roughly equal to that of ^{233}U and its decay products. Thus, multiplying this factor by the amount of ^{233}U gave the total equivalent inhalation hazard in terms of kg of ^{233}U.

3.2.4.3 Risk-Based Characterization Results

Figure 3.1 shows the results of evaluating the 1004 packages currently in the Building 3019 storage tube vaults. Numbers are not included on this figure to emphasize the qualitative nature of the results. Each point on the figure represents a group of similar packages ranging from several single packages to 403 packages for the CEUSP material. Because some groups (e.g., the CEUSP) have large numbers of similar packages, a normal distribution was not expected.

The graph is broken into three regions. Those in the bottom left portion of the graph are deemed lower risk (low material score and low package score), while those in the upper right are deemed higher risk. The lines delimiting regions of risk represent the product of the material and packaging factors equaling arbitrarily selected constants. The fact that the majority of the packages are in the lower-risk category indicates that most of the packages that are poor (i.e., will not meet the ^{233}U storage standard) have relatively low-consequence material in them, while the most dangerous material is in higher-quality packages.

The single package in the higher risk group is one of the four assemblies labeled RCP-04 (Fig. A.6, Appendix A). Unlike, the other RCP-04 packages, this package is doubly contained in unwelded aluminum canisters, which have been deemed to be less robust than SS or nickel containers. This material has been in storage for over 30 years. This ranks the material as among the oldest in storage. In addition to these packaging factors, the material in this package is in an undesirable form (fluoride salt) with 220 ppm ^{232}U (calculated to be 161 ppm in 1999). Finally, the amount of material in this package (1.6 kg) is more than three times the amount in any of the other RCP-04 packages.

The other three RCP-04 assemblies are in the medium risk category (Figs. A.5 and A.7, Appendix A). They all have the undesirable, fluoride salt material form with 161 ppm ^{232}U in 1999. However, unlike the high-risk package, the amount of ^{233}U in each of these packages is less than 0.5 kg. Also, all of these assemblies have at least one packaging layer constructed of SS or nickel.

Another group in the medium risk category consists of the two LANL assemblies (Fig. A.1, Appendix A). These have only one packaging layer. Each package contains ~3 kg of ^{233}U metal, the two largest quantities in the ORNL inventory. These materials have a ^{232}U content of 33 ppm (in 1999).

The two metal scrap assemblies labeled RCP-20(Nos. 2 & 3) (Fig. A.19, Appendix A) are also in the medium risk category. Each package contains ~2 kg of ^{233}U metal in two layers of tinplated packaging. This material has a ^{232}U impurity of 29 ppm (in 1999).

The largest batch of packages in the medium-risk group consists of the 140 Savannah River aluminum assemblies labeled RCP-03 (Fig. A.9, Appendix A). Like the high-risk RCP-04 material, this material is doubly contained in aluminum cans, the packages have been in storage for over 30 years, and the ^{232}U content is 156 ppm in 1999. However, there are two reasons the material is not in the higher risk category: (1) both layers of cans are welded shut and (2) the material is oxide powder rather than fluoride salt.

3.2.5 Initial Package Inspections

In 1998, five cans were removed from the tube vaults for programmatic use (Table 3.3). All of these were low-risk cans involving small quantities of ^{233}U with low ppm levels of ^{232}U. Therefore, radiation fields were low, and an unshielded containment box could be used to address the concerns of potential release from a damaged can or by dropping a can down a tube vault (Fig. 3.2).

Table 3.3. Inspected material

ID	Date Removed	Form	^{233}U (g)	^{232}U (ppm)	Storage time (y)
RCP-10-1	5/28/98	Oxide Powder	239	4	14
RCP-10-2	5/28/98	Oxide Powder	143	4	14
BA-35-1	5/28/98	Oxide Powder	4	1	14
TAR-LB1	5/28/98	Metal	122	0.45	14
MURO-18	7/15/98	Oxide Powder	199	2	2

3.2.5.1 RCP-10

The two cans labeled RCP-10 were removed from the tube vaults for recovery of ^{229}Th. The tinplated-steel outer cans were in excellent condition with no deleterious (i.e., only some surface tarnishing was evident) signs of corrosion. The masking tape label on RCP-10-1 showed signs of discoloration (Fig. 3.3). The innermost containers of these packages consisted of polystyrene jars in direct contact with the material. Although such packaging is discouraged by the draft ^{233}U standard (DOE 1998), the packages showed no structural problems, although they were discolored (Fig 3.4). About 11 mCi of ^{229}Th were recovered from these two cans.

3.2.5.2 BA-35-1

The BA-35-1 material is a small batch of some of the purest ^{233}U in the inventory. The tinplated outer can was again in excellent condition. This material was removed for ^{229}Th recovery. However, it has been held in reserve because of its low quantity and exceptional quality.

3.2.5.3 TAR-LB1

The material labeled TAR-LB1 consists of very high-quality ^{233}U metal in the form of wafers. This material was removed for criticality studies in conjunction with the response to DNFSB's Recommendation 97-2. The tinplated outer can showed no deleterious signs of corrosion. The package assembly proved heavier than expected because the inner packaging, which was described in inventory records as "capsules," consisted of two nested SS containers.

3.2.5.4 MURO-18

The material labeled MURO-18 was part of the shipment of ^{233}U from Mound Laboratory in 1996. This package had been placed in storage recently, and the SS outer packaging was still in excellent condition. This material was also removed for ^{229}Th recovery. About 4 mCi ^{229}Th were recovered.

ORNL PHOTO 2085-99

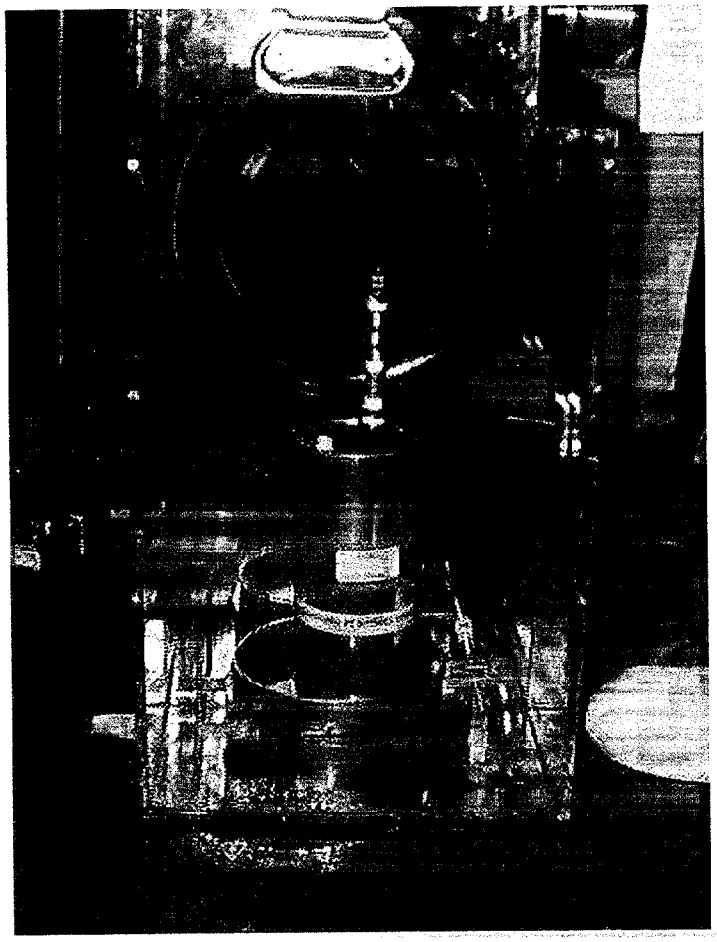

Fig. 3.2. Unshielded containment box.

ORNL PHOTO 2086-99

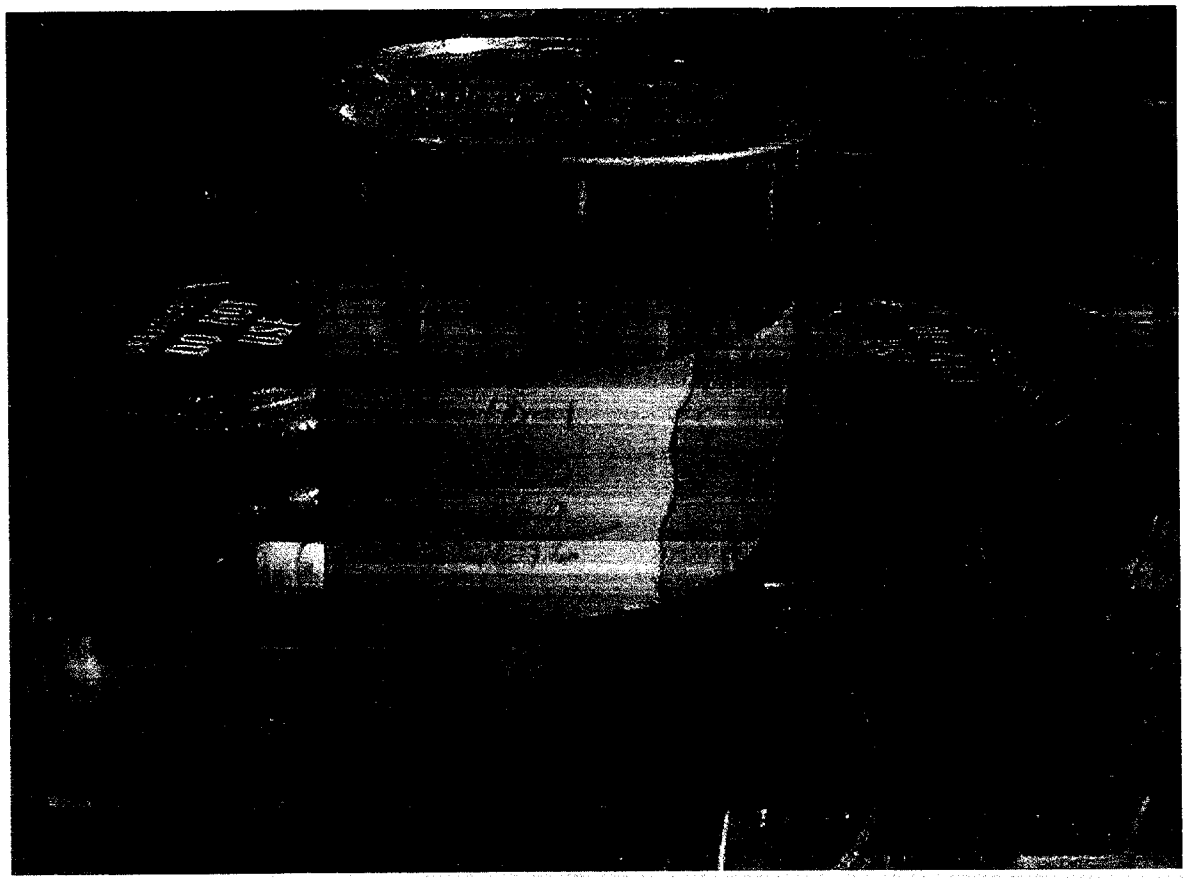

Fig. 3.3. RCP-10-1 outer container.

ORNL PHOTO 2087-99

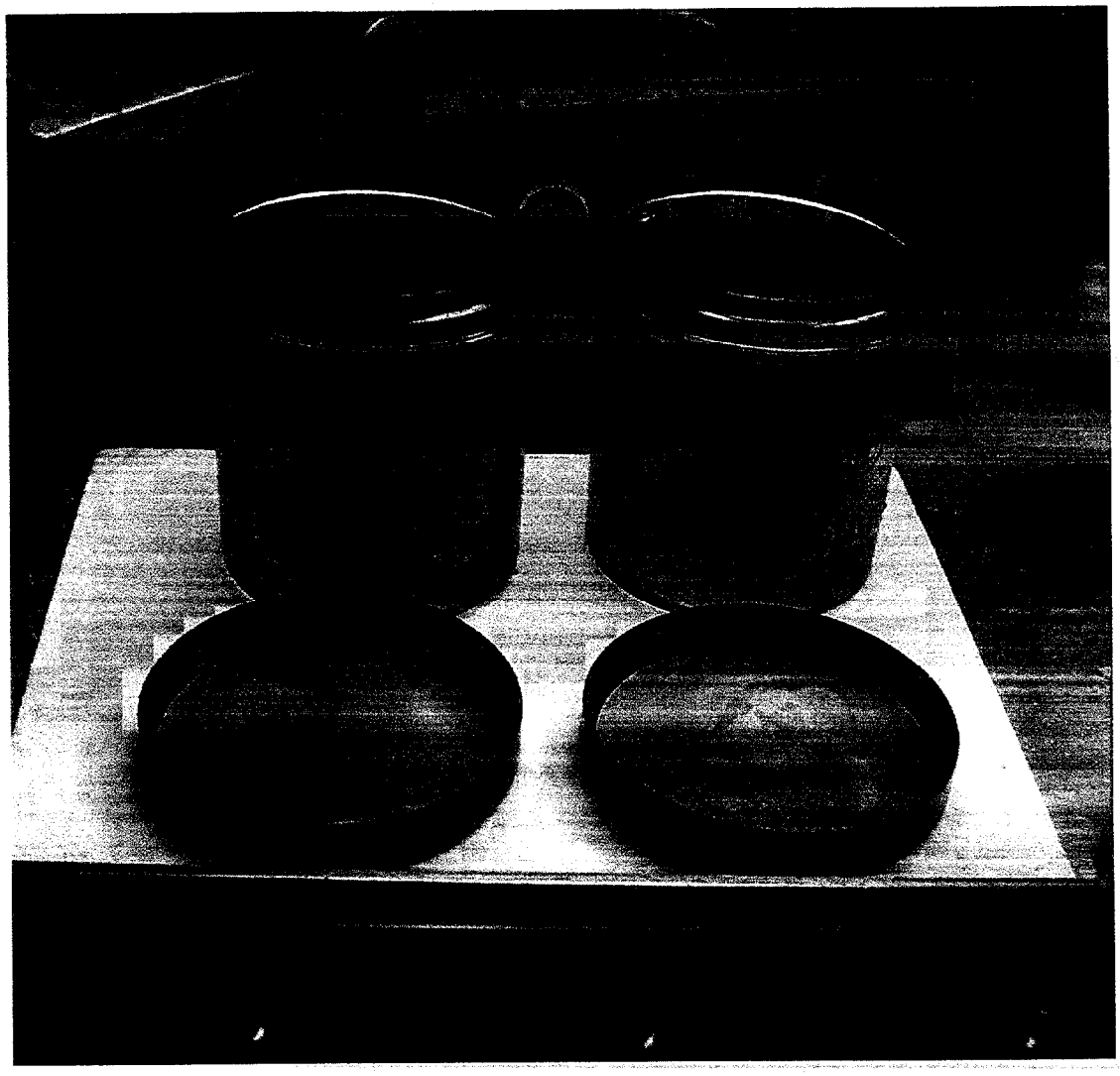

Fig. 3.4. RCP-10-1 and RCP-10-2 inner containers.

4. PLANNED INSPECTION AND REPACKAGING ACTIVITIES

A safe storage standard for ^{233}U currently is being developed and has been issued in draft form (DOE 1998). A sampling of ^{233}U containers in Building 3019 will be inspected and repackaged as necessary to meet the draft standard. Other ^{233}U containers may be added to the sample as a result of these inspections. The inspections will also characterize the inventory's material condition, quantity, and type and will assess the condition of each type of storage container and, as necessary, initiate corrective measures.

4.1 INSPECTION PLAN

4.1.1 Container and Material Evaluation Strategy

Inspection of the containers will include smear sampling, weighing, radiography, and gamma and neutron characterization (Fig. 4.1). The gross weight of the container can be compared with inventory records. Information from the radiography (^{192}Ir gamma imaging) analysis can be used to verify container integrity and, to verify the internal configurations of the primary container(s). Information from the radiography evaluation may also spot potential problems, such as bulging from pressurization. Nondestructive methods for quantitative measurement of ^{233}U content are still being investigated. The neutron and gamma characterization will provide a material signature for nuclear material control and accounting.

The draft storage and packaging criteria for ^{233}U-bearing materials will be used to evaluate the packages. Upon conclusion of the inspection and repackaging program, all packages will meet these criteria. To plan the activity needed for each package, inventory records were compared to the draft storage criteria.

Packages were evaluated on the basis of material form, type of packaging, and package closure. Packages that did not contain an acceptable material form were designated for stabilization and repackaging. The group includes fluoride salts and thin foils. Packages with an acceptable material form (metals or oxides) that were not in welded packages were designated for repackaging, with consolidation wherever possible. Packages that had metal or oxide powder with only one welded layer were designated for overpackaging. Packages containing metal or oxide powder within two welded SS or Al packages, or packages containing oxide monoliths with one welded SS package were deemed to meet the draft criteria and designated for NDE only. Additionally, since the NDE group contained two large populations of package assemblies (CEUSP and RCP-03) it is planned to sample these two groups on a statistical basis. Figure 4.2 summarizes these plans, which are also included in Table 2.1. As information is gained during the package inspections, the plan will be modified as appropriate.

The inspection and repackaging will be conducted in two phases. In Phase I, 100 canisters are planned to be inspected. The 100 canisters were chosen based on the following criteria: Tube vaults that contain Category III quantities or less (< 2 kg oxide; < 0.4 kg metal) of material and tube vaults with a wide variety of packages that should not require repackaging were given highest priority. The inspection order in each phase was chosen to emphasize examination of lower ppm ^{232}U material earlier in the inspections.

ORNL DWG 99-4806

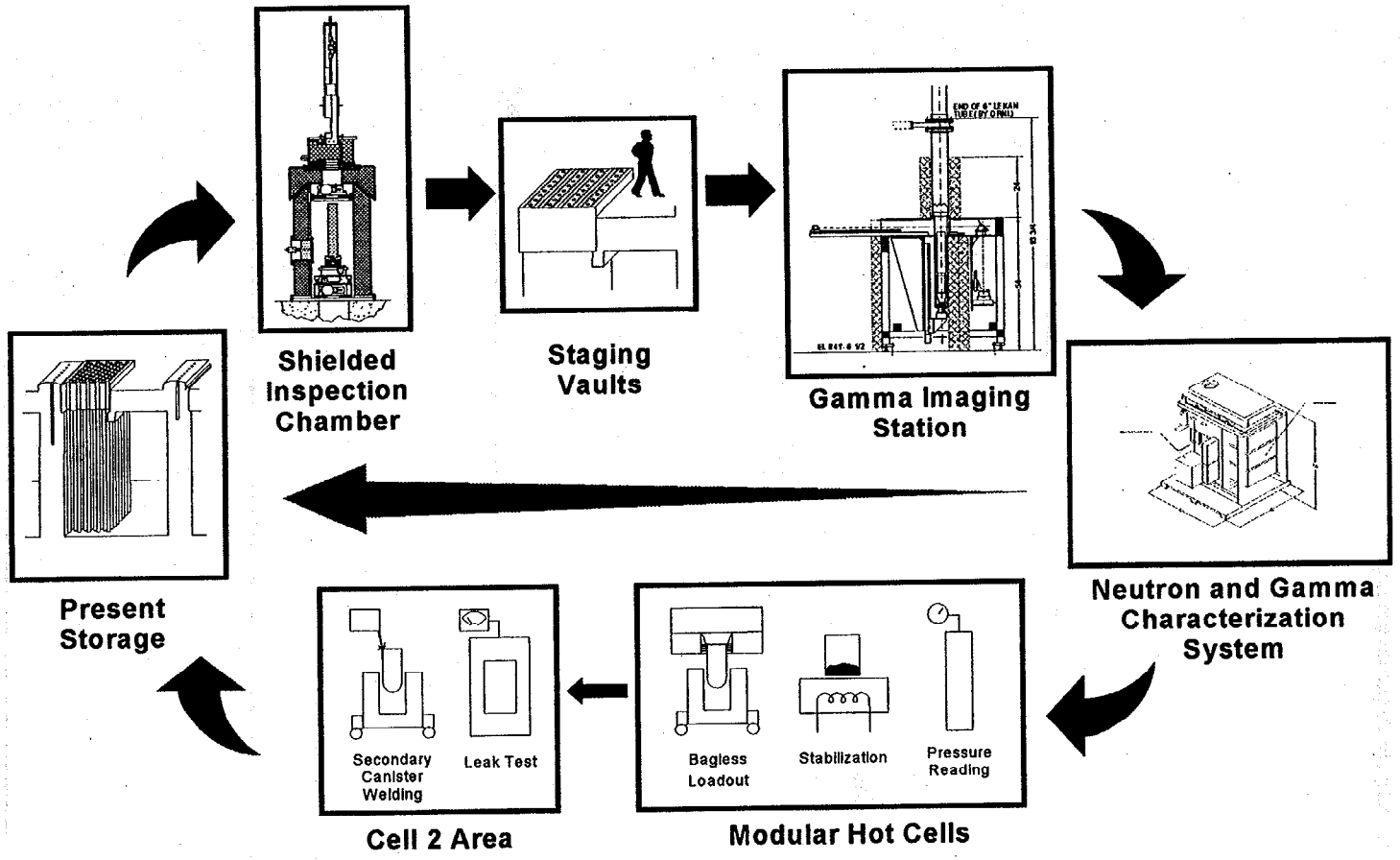

Fig. 4.1. ^{233}U package inspection paths.

ORNL DWG 99-4926

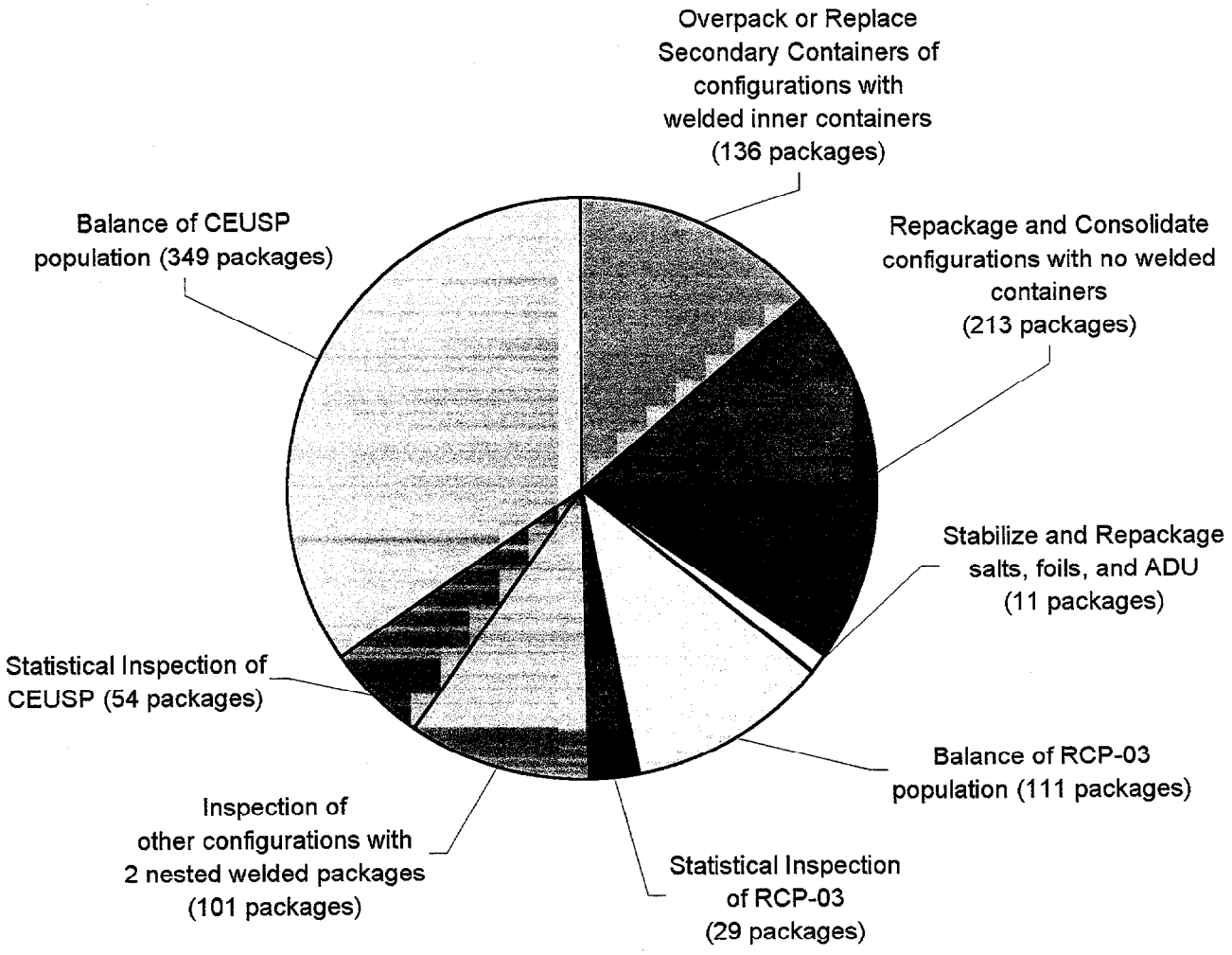

Fig. 4.2. Inspection and repackaging plan.

Table 4.1. Inspection sequence

Tube vault sequence	Can ID range	Total number of cans	Nominal dose range @ 1 ft (rem/h)	Strategic Nuclear Material (SNM) category	Transfer shield required?	Figure numbers
1	832-839	8	0.2	III	N	5 × A.21, 2 × A.19, 1 × A.38
2	918-926	9	0.1	III	N	9 × A.12
3	928-937	10	<0.1	III	N	10 × A.12
4	938-942	5	12–<0.1	III	Y×2	1 × A.10, 1 × A.25, 3 × A.8
5	915-917	3	<0.1	IV	N	3 × A.24
6	845-856	12	4	II	Y	12 × A.8
7	869-880	12	4.5	I	Y	12 × A.8
8	330-341	12	25	I	Y	12 × A.8
9	968-996	29	0.2	I	N	29 × A.11
Phase I Total Cans		100				
10	296-329	34	0.2	I	N	20 × A.14, 2 × A.15, 6 × A.2, 6 × A.3
11	220-260	41	0.2	I	N	33 × A.14, 7 × A.15, 1 × A.16
12	178-219	42	0.2	I	N	30 × A.14, 12 × A.15
13	261-295	35	8@1.8– 0.3	I	Y×8	18 × A.14, 6 × A.9, 6 × A.15, 3 × A.19, 2 × A.18
14	796-827	32	0.2	I	N	22 × A.10, 2 × A.28, 1 × A.26, 1 × A.31, 1 × A.32, 1 × A.33, 1 × A.38, 1 × A.39, 1 × A.40, 1 ×
15 (3)	928-937	n/a	5	III	N	10 × A.12
16 (9)	968-996	n/a	0.2	I	N	29 × A.11
17 (1)	832-839	n/a	0.2	III	N	5 × A.21, 2 × A.19, 1 × A.38
18	714-747	34	0.2	I	N	33 × A.10, 1 empty
19	762-795	34	1@0.5–0.3	I	N	3 × A.10, 5 × A.17, 1 × A.19, 1 × A.21, 3 × A.23, 2 × A.24, 1 × A.27, 4 × A.30, 3 × A.37, 2 × A.41, 3 × A.42, 1 × A.43, 3 × A.45, 1 × A.46, 1 empty
20	748-761	14	6@0.5– <0.1	I	N	6 × A.18, 3 × A.24, 2 × A.13, 2 × A.10, 1 × A.20
21	997-1011	15	0.3	I	N	15 × A.11
22	943-967	25	0.3	I	N	25 × A.11
23 (5)	915-917	n/a	<0.1	IV	N	3 × A.24
24	883-914	32	0.4	I	Y	2 × A.11, 1 × A.24, 29 × A.10
25 (2)	918-926	n/a	0.1	III	N	9 × A.12
26 (4)	938-942	n/a	12 – <0.1	III	Y×2	1 × A.10, 1 × A.25, 3 × A.8
27	366-377	12	25	I	Y	12 × A.8
28	342-353	12	25	I	Y	12 × A.8
29	354-365	12	25	I	Y	12 × A.8
30	840-844	5	4	II	Y	5 × A.8
31	881-882	2	6	II	Y	2 × A.8
32	60-71	12	6	II	Y	12 × A.9
33	72-83	12	6	II	Y	12 × A.9
34	142-159	18	6	II	Y	18 × A.9
35	160-177	18	17	I	Y	18 × A.9
36	84-94	11	5	II	Y	11 × A.9
37	125-133	9	2@3.5– <0.1	I	Y×2	2 × A.1, 2 × A.35, 3 × A.22, 2 × A.34
38	134-141	8	19–1@0.1	I	Y×7	2 × A.5, 1 × A.6, 1 × A.7, 1 × A.9, 1 × A.29, 1 × A.36, 1 × A.44
Phase II Total Cans		469				
Grand total cans		569				

Parentheses in the tube vault sequence indicate material in tubes from Phase I that may be rehandled in Phase II.

Table 4.2. Uranium-233 inspection and repackaging staffing requirements

Staffing requirements[1]	Inspection activities performed	Project specific training
Operating Group (3) Supervisor Technicians	Retrieve material from storage Perform inspection chamber operations Transfer material to imaging/laser equipment Transfer material to characterization equipment Transfer material back to storage	Inspection chamber operation Shielded carrier operation Material receipt and storage operation Material access and retrieval operation
Technical Support (1) Engineers/ Technicians	Operate video/imaging/laser equipment Operate neutron/gamma characterization equipment	Laser engraving operation Imaging operation Neutron/gamma characterization operation Inspection chamber operation
MBA Rep/ Alternate (1)	Monitor material retrievals from storage Monitor material transfers for inspection Monitor material transfers back to storage	Inspection chamber operation Receipt and storage operation Material access and retrieval operation
Radiation Control Technicians (1)	Support material retrieval activities	Inspection chamber operation Shielded carrier operation Receipt and storage operation Material access and retrieval operation
Millwrights (1)	Support material retrieval activities	Material access and retrieval operation
Facility Management (1)	Oversee material retrieval, inspection and restorage activities	Inspection chamber operation Shielded carrier operation Receipt and storage operation Material access and retrieval operation
Security	Security for material access operations	Receipt and storage operation Material access and retrieval operation SSP, pre-job briefing
Fire Protection	Isolate fire sprinklers during material access	Pre-job briefings

[1]Numbers in parentheses indicate minimum number of staff required in each grouping to perform operations. Security & Fire Protection at required levels. The total staffing level is approximately double the numbers in parentheses to provide backups, training time and pre- and post- inspection operations.

ORNL PHOTO 2088-99

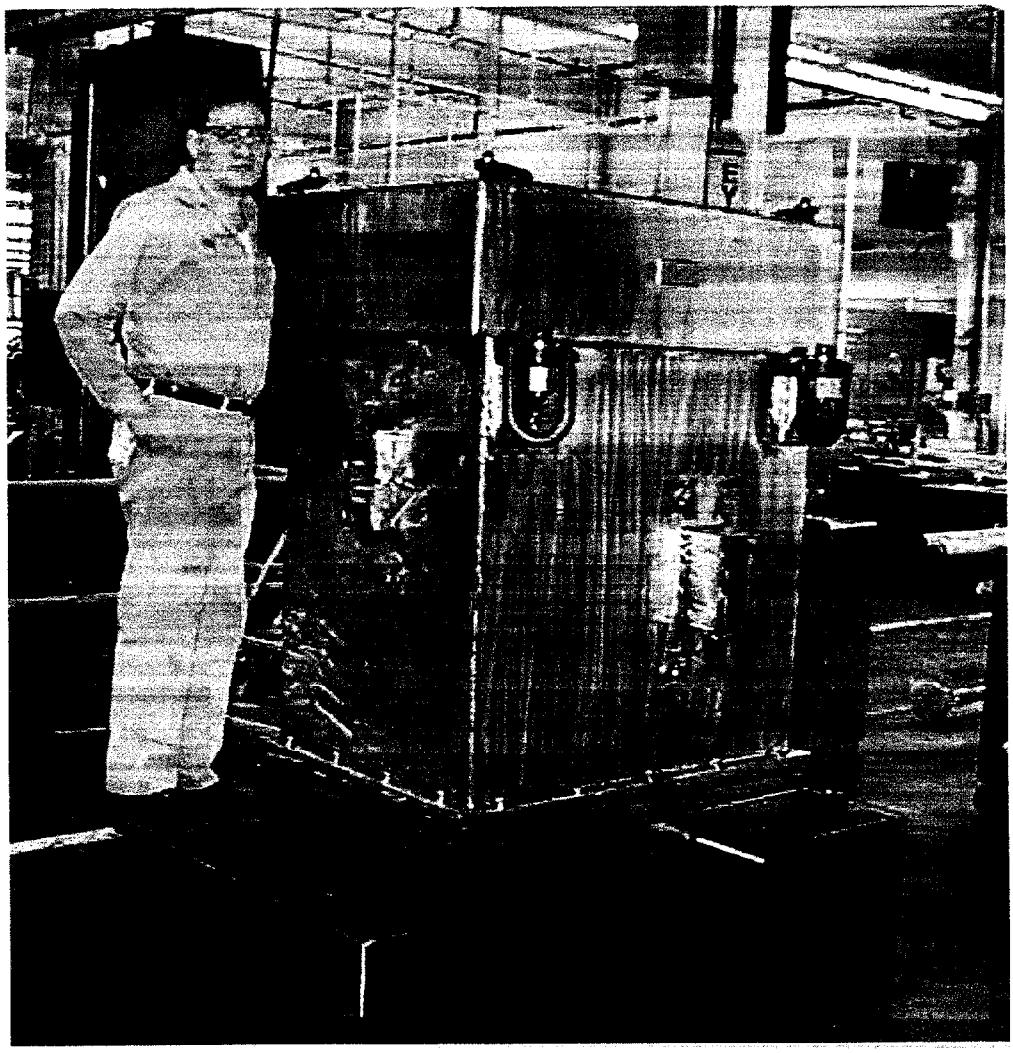

Fig. 4.3. Shielded inspection chamber

4.4 RADIOLOGICAL AND INDUSTRIAL HAZARD EVALUATION

As discussed in Sect. 2.6, the BIO provides facility bounding accident analysis and the USQD process provides task specific accident analysis. Nuclear criticality safety will be discussed in Sect. 5.1. Other task specific radiological and industrial hazards are identified and evaluated by a job hazard evaluation (JHE).

A JHE was performed for the use of the preliminary inspection chamber. The physical hazards involved with this activity include tripping or falling, compressed gas cylinders, heat stress, and lifting. Additional construction hazards consist of hoisting or rigging, cranes (mobile and crawler), crushing, material handling, and housekeeping. Ionizing radiation hazards are encountered in this activity. Administrative controls include a Hoisting and Rigging Plan and a Radiation Work Permit. Protective clothing for most operations will require company clothing and lab coats. Goggles and face shields are required when handling liquid nitrogen (for the freeze-plug overpacking system) as well as latex gloves, steel-toed boots, and shoe covers. Heat stress during the summer months is an additional hazard.

A JHE was also performed for the hazards associated with the operations of the ^{233}U canister radiography station and the gamma and neutron characterization equipment. The operations of these systems will be performed remotely. Thus, the interlocks and engineered safety features were evaluated in-depth. Most hazards are involved with maintenance procedures rather than operations. The hazards involved with operating the imaging station and characterization equipment are oxygen deficiency in the control area (because of the presence of a liquid nitrogen dewar) and an elevated gamma radiation field when a gamma source is out of the vault. Unique considerations for entry into Cell 3 are oxygen deficiency, gamma sources, the Class 4 laser used in the canister labeling system, neutron sources, and isolation of the Cell 3 fire sprinkler system during the presence of material.

5. STORAGE SYSTEM EVALUATION

The storage systems in Building 3019 are being evaluated as to their appropriateness for the storage of ^{233}U. Because of its unique characteristics, ^{233}U requires special handling and storage (Bereolos et al. 1997). The basic facility requirements for storage of fissile materials are criticality control, shielding, ventilation, and safeguards. Additionally, resistance to natural phenomena has an impact on the design of criticality control, ventilation and shielding. A specialized facility for ^{233}U is needed because of the differences from the other special nuclear materials (i.e., Pu and HEU), especially with regard to ventilation and shielding.

Ventilation is used as a means of physical confinement. In terms of alpha specific activity, ^{233}U is more active than HEU, but less active than most Pu isotopes. However, ^{233}U also has a unique ventilation requirement imposed by the decay chain of its associated isotope, ^{232}U. Part of the ^{232}U decay chain includes the gas ^{220}Rn. Thus, storage facilities for ^{233}U must consider the presence of this gas so that high concentrations of radon in a mobile environment (such as a sparged liquid) can be retained (before final filtration) until it decays into a particulate form that may be filtered. The retention time should be on the order of ten minutes based on the 55-second half-life of ^{220}Rn and depending on the concentration of ^{220}Rn to be handled.

Uranium-232 is always present with ^{233}U and has as part of its decay chain ^{208}Tl, which emits a highly penetrating 2.6-MeV gamma-ray accompanying its beta decay to stable ^{208}Pb. Because of this emission, ^{233}U requires special shielding and remote handling.

In this section, the current condition for each storage attribute is described with a focus on any areas of concern. Next, the results of inspections to address these concerns are described and followed by the planned future activities.

5.1 NUCLEAR CRITICALITY SAFETY

5.1.1 Description

Nuclear criticality safety in Building 3019 is maintained by (a) a combination of passive and active systems and (b) administrative controls. Criticality safety analysis is an integral part of operations and is based on the approved Nuclear Criticality Safety Assessments (NCSAs), ORNL procedures, and criticality safety studies (Primm 1992, Primm 1993). As part of the criticality safety program, ORNL continually reviews potential accident and operational scenarios for their possible impacts on criticality safety.

NCSAs are used to prescribe (a) moderation and loading limits and (b) handling controls for criticality prevention. Several moderation limits and controls can be applied when accessing wells. The fire header is always isolated and drained in the Penthouse when accessing loaded wells. Only a limited number of wells are opened at the same time. Limits are placed on the size of containers and presence of moderating liquids in the Penthouse. Bounding calculations are used to determine the spacing of containers in the wells to preserve at least two independent safety contingencies against an in-well criticality. Material or container limits, as well as other factors, are imposed to prevent an out-of-well criticality.

Periodic radiation surveys verify conditions and identify potentially unacceptable radiation levels. Periodic smear sampling is done to determine transferable contamination levels.

ORNL radiation protection personnel routinely survey and sample the ^{233}U storage areas and systems to verify the continuing adequacy of the shielding, to identify any changes in ^{233}U container integrity, and to identify the level of contamination. Gamma surveys are conducted in the storage areas to search for and quantify gamma radiation fields and to detect changed conditions. Only one area in the Penthouse has elevated readings (up to 70 mR/h on contact) that are attributed to ^{233}U in storage. This occurs at the south end of the tube vaults between Cells 4 and 5. The elevated reading at this point has been stable for decades and is attributed to the original shielding design and not due to legacy contamination or a weakness in the structure. This area is posted according to radiation procedures to alert workers of the radiation fields. Stacked lead bricks are located on the Penthouse floor adjacent to this and other in-wall tube vaults to reduce radiation levels near the top of the tube vaults.

5.2.2 Inspections

Video inspection of Cell 4 allowed a full view of the east face of the eastern-most row of concrete storage columns from top to bottom. The floor area did display indications that paint (possibly from the cell wall and ceiling areas) has begun to separate and flake off from upper surfaces. However, this paint is not associated with the tube vaults, which are cast in concrete that has not been painted. The condition of the concrete appeared to be excellent from this video inspection. Overall, no evidence of concrete deterioration was indicated.

5.2.3 Personnel Exposure

From 1996 through February 1998, the total exposure to personnel in Building 3019 from routine surveillance and maintenance was 1579 mR for 22,846 person-hours of work (0.069 mR/person-hour). Activities similar to those that will be performed during the inspection took place during material receipt in 1996, material shipment in 1991, and tube vault transfers and material shipment in 1988. For the 1996 material receipt, the collective exposure to all workers involved was 73 mR for 110 person-hours of work (0.66 mR/ person-hour). For the 1991 material shipment, the total exposure was 312 mR for 60.5 person-hours of work (5.16 mR/person-hour). The 1988 transfers and shipment resulted in an exposure of 284 mR in 163 person-hours (1.74 mR/person-hour). These exposure rates were well within standard limits.

A plan to keep exposures as low as reasonably achievable (ALARA) has been prepared for the Phase I inspection of ^{233}U canisters. The plan addresses the setup of the inspection chamber, the initial canister inspection, material transfers from storage vaults to other inspection stations, transfers to and from staging vaults, NDA, and NDE of canisters. The total collective dose for Phase I has been calculated to be 1.34 rem for all personnel involved. The estimated doses per package are lower than previous operations because of additional engineered controls (e.g., the shielded inspection chamber) and the remote operation to the inspection equipment.

An additional ALARA plan will be prepared for Phase II. During Phase II exposures may be higher because material will not only be accessed and handled, but also processed. Control factors will include a rigorous ALARA approach and upgrades of handling and processing equipment, as discussed elsewhere. Statistical sampling of the two large batches of the inventory as discussed in Sect. 4.1.1, rather than a complete inspection, will also serve to limit exposures.

ORNL PHOTO 1703-98

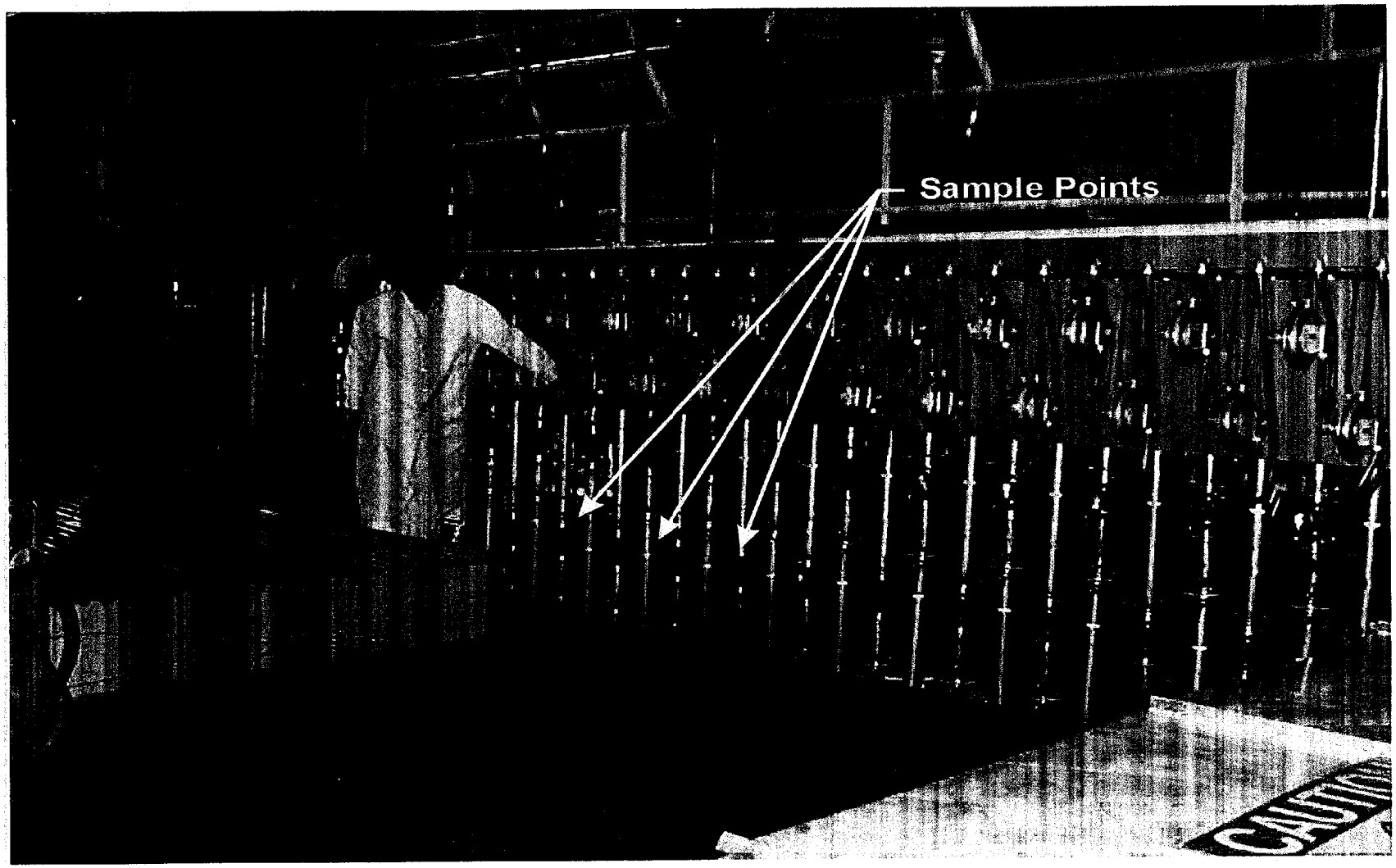

Fig. 5.1. Cell 4 tube vaults off-gas manifold.

ORNL PHOTO 1704-98

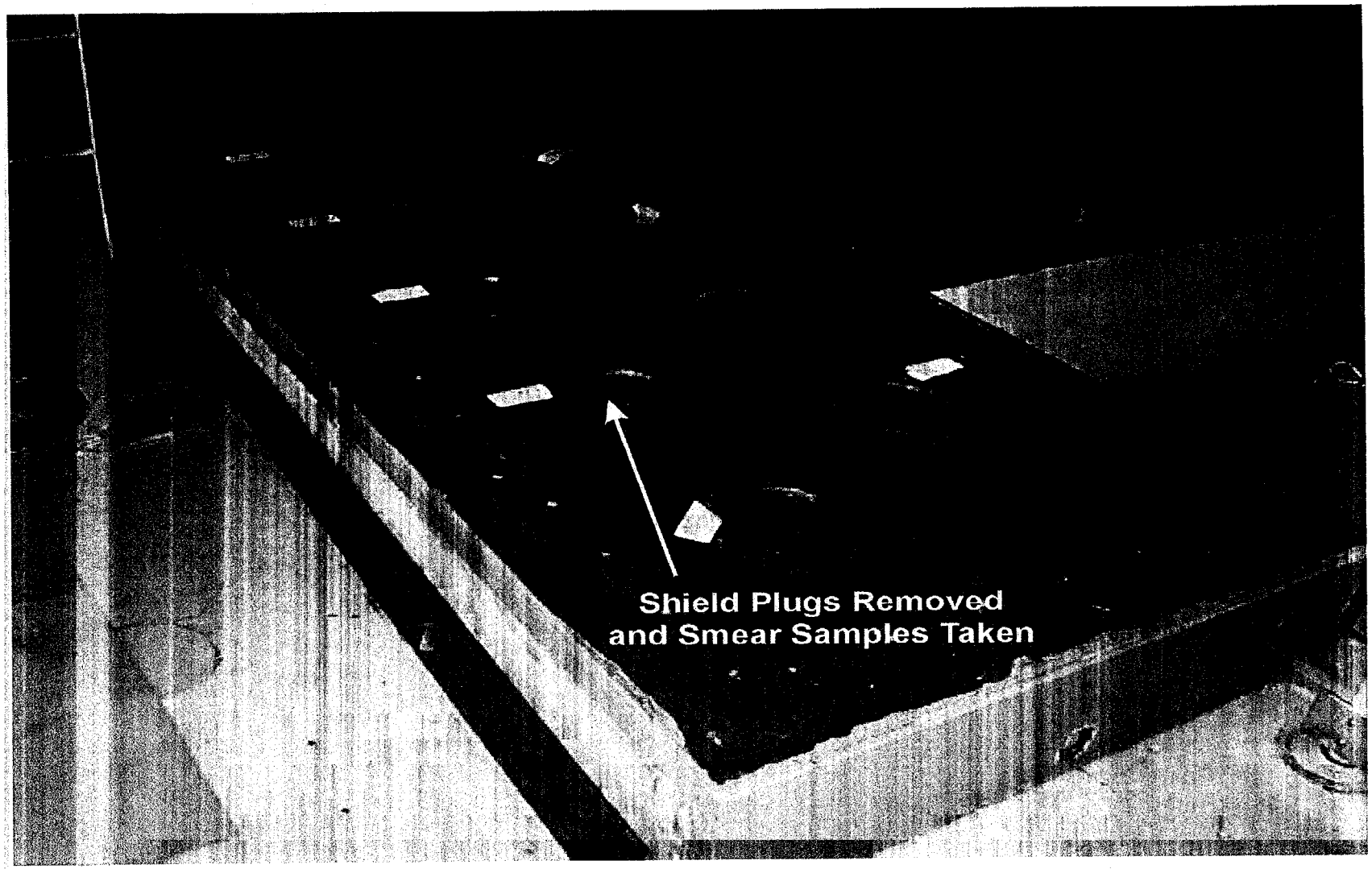

Fig. 5.2. Tops of empty storage tube vaults.

5.3.2.2 Sampling of Tube Vault Off-Gas Line

Because of the lack of sampling data from the off-gas lines, a system for residual gas sampling was developed and gas samples were taken (Fig. 5.3). Residual gas sampling is accomplished by attaching a sampling apparatus to selected points in the VOG lines that serve to maintain a negative pressure on the storage tube vaults. The sampling apparatus was connected to VOG lines in such a manner to allow diversion of off-gas flow to the apparatus while a restricting valve was closed in the main off-gas line. The sampling apparatus consisted of a mass flow meter with flow totalizer capability, a hydrogen detector, a HEPA filter, and a vent valve for venting the storage tube vaults to atmospheric pressure in a controlled manner. Air was diverted to the sampling apparatus in a controlled manner and passed through the HEPA filter, which was connected to the VOG in such a way that isolation valves could be closed and the filter element removed for analysis. Existence of activity on the HEPA filter might have been an indication of a leaking storage container.

Gas samples from the off-gas lines from the storage tube vaults showed no contamination and no hydrogen. The sampling provides a baseline for future trending of off-gas conditions. If contamination is discovered in the future, package integrity in the contaminated tube vault(s) will come into question. A limitation of this method is the low rate of air exchange in the tube vaults between the storage length of the tube and the head space of the vault where the off-gas headers connect. Particulate matter or ^{220}Rn released from a package must move up through a static air column to the head space through relatively small channels around the vault shield plugs. Thus, the sensitivity of the off-gas sampling is limited.

5.3.2.3 Trend analysis of historical off-gas monitoring data

A survey of information about off-gas analyses of the Building 3019 storage tube vaults indicates that insufficient data exists to perform a credible trend analysis of the off-gases. The existing VOG system is buried as it travels from Building 3019 to the 3039 Stack, and its exhaust is not a part of a regular sampling program. In addition, the regulatory sampling program, which is currently in place is downstream of the VOG exhaust contribution, so that any effects in the exhaust are diluted more than ten times by other flows. The sampling program is also inadequate in detecting significant species (e.g., ^{220}Rn) that would be expected in the event of a ^{233}U container failure.

5.3.2.4 Inspection of Building 3019 Tube Vault Headers

When the Building 3019 storage tube vaults are accessed for physical inspection of the material, the following activities will take place: (1) probe surveys for vapor-space contamination, (2) measurement of the penetrating radiation field, (3) smear sampling of tube head interiors, and (4) measurement of available storage space height. These measurements can give advanced warning of potential problems with containers before the containers are removed from the tube vaults.

Over the decades of material storage and occasional storage tube vault accesses, only two adjacent contaminated tubes have been encountered. One of the tubes appears to contain the source of the contamination. The second tube indicated much lower levels of contamination than the first tube. The initial investigation suggests the contamination came from the external surface contamination of a package (known to be present at the time of storage) and not necessarily a

ORNL PHOTO 1705-98

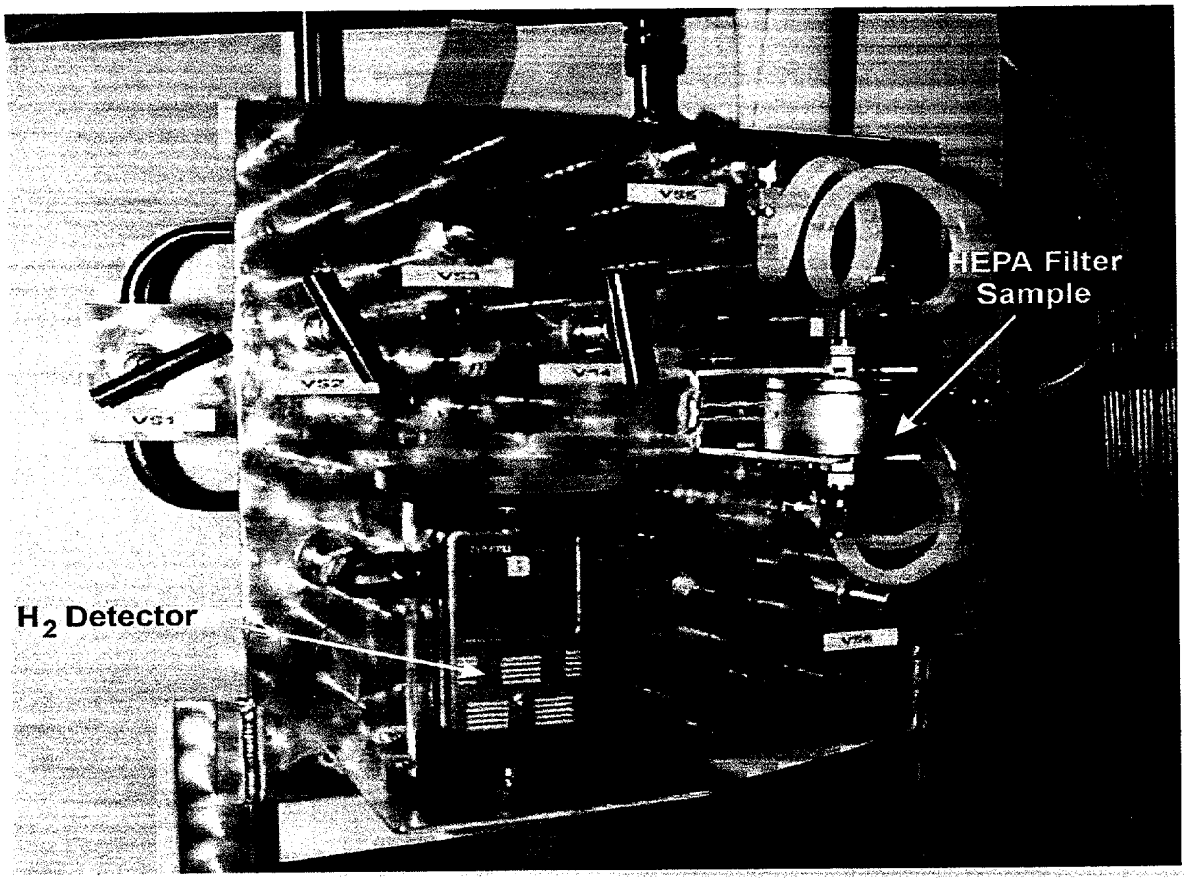

Fig. 5.3. Off-gas sampling unit.

5.3.3 Ventilation Requirements Analysis

5.3.3.1 Methodology

The historical mission of Building 3019 was the development of radiochemical processing of nuclear materials for various fuel cycles. To accommodate these programs and to address evolving ES&H requirements, the original ventilation network has been modified numerous times. Today, some portions of the ventilation network are original Manhattan Project vintage, and some portions have been added or replaced as recently as this current year. An analysis is being prepared to document the design, functional performance, interface, and regulatory requirements for the Building 3019 ventilation systems. The ventilation systems are expected to function, meet specific performance requirements, interface with other interdependent systems, and to meet modern regulatory requirements. The requirement set for this analysis was derived from the following command media:

- Building 3019 FAB
- ORNL Prime Contract with DOE
- ORNL-RDF Work Smart Standards (WSS)
- ORNL-RDF Directives and Procedures
- DOE Handbook – Design Considerations (draft)
- DOE Order 6430.1A, *General Design Criteria,* dated 4/6/89 (canceled)[1]

The requirements and stipulations from the previous list of documents were then reviewed for applicability to the Building 3019 ventilation systems. If found appropriate, the stipulations were retained as part of the source requirements for the purpose of this analysis. Requirements so identified were designated using the citing source (i.e. order or procedure numerical designation) and material identification as a prefix and sequential numbering R1, R2, etc. as a suffix. For example, the third requirement identified from DOE Order 6430.1A, Division 15, Sect. 1550-99, Subsect. 2 might be designated as 1550-99.0.2-R3.

The following matrix (Table 5.1) provides an overview as to the applicability of the command media criteria used to develop the ventilation systems requirements set. Over 260 candidate requirements were identified from these command media. Eliminating duplication and linking requirements to the various ventilation systems further refined these requirements.

---

[1] Over many years, the core of ventilation system design for high hazard nuclear facilities has been DOE Order 6430.1A, *General Design Criteria*. This document contains the culmination of many years of experience in operating nonreactor nuclear facilities. In 1996 DOE decided to simplify and revise its directive system and Order 6430.1A was identified for cancellation because it was deemed too prescriptive and rote implementation proved to be excessively costly. As a result DOE Orders 430.1, Life Cycle Asset Management, and 420.1, Facility Safety, have replaced Order 6430.1A. While Order 6430.1A contained dated material and was deemed too prescriptive, DOE concluded it did contain useful information on good design and operating practices that should not be lost. Therefore, DOE is in the process of publishing a *Design Considerations Handbook* that contains the useful lessons learned and the good practices that are contained in 6430.1A. However, none of the material in the handbook is invoked as requirements via an order but is considered guidance that the operating contractor may apply this material in a graded approach to the particular facility and the associated hazards involved.

Table 5.2. Types of weaknesses in ventilation requirements

	GBOG	COG/LOG	VOG	All Ventilation Systems	Building
Regulatory	1300-3.4-R2 1550-99.0.2-R3d	1325-4.4-R1a			
Air Flow		HDBK-1.1.6-R2m 1550-99.0.1-R2		1550-99.0.1-R3	HDBK-1.1.6-R1
Instrumentation				HDBK-1.1.6-R2j HDBK-1.1.6-R4j	
Filters and Exhausters				HDBK-1.1.6-R2d	
ALARA				1550-99.0.3-R13	
Confinement		HDBK-1.1.4-R1g 1325-4.3-R1	HDBK-1.1.4-R1f	1325-4.2-R5c	RPP-128-R5
Glove Boxes	RPP-347/B-R25				
Miscellaneous				HDBK-1.1.6-R2b HDBK-1.1.6-R2g 1550-99.0.3-R1 1550-99.0.3-R12	

5.3.3.2.2 Adequate Flow Rates and Pressure Gradient Requirements

This subset has four weaknesses (HDBK-1.1.6-R1, HDBK-1.1.6-R2m, 1550-99.0.1-R2 and 1550-99.0.1-R3) involving air flow reversal during upset conditions. These weaknesses have a common cause in that they all involve back flow prevention for secondary spaces or HVAC capacity limitations. A component of these requirements is the assurance that air flows from uncontaminated areas toward areas of increasingly higher contamination and on to treatment and filtration systems prior to atmospheric release. Directional flow of air is maintained by differential pressure gradients with the likely-to-become contaminated or contaminated areas more negative than non- or less-contaminated areas.

5.3.3.2.3 Ventilation Instrumentation and Alarm Requirements

The third subset addresses ventilation instrumentation, controls, and instrumentation taps for *in situ* filter testing needed for operators to assess the status of confinement ventilation systems. Two weaknesses were identified (HDBK-1.1.6-R2j and HDBK-1.1.6-R4j) that involved requirements for in-duct instrumentation to monitor and control the ventilation systems in the facility.

5.3.3.3 Ventilation Upgrades

Recommendations that address identified weaknesses are beyond the scope of this report but are forthcoming in the Ventilation Requirements Assessment document. As a part of its current mission, Building 3019 needs the capability to process multikilogram quantities of ^{233}U. These capabilities will be necessary during the inspection and repackaging of material stored within the tube vaults. Upgrades are currently being planned as a result of the ventilation requirements analysis to enable continuance of this capability on a routine basis.

5.4 RESISTANCE TO NATURAL PHENOMENA

5.4.1 Description and Concerns

Accidents caused by natural phenomena (e.g., earthquakes, tornadoes, or floods) can impact criticality control, radiation protection, and confinement. At Building 3019, these are of concern because three vulnerabilities that can result from natural phenomena have been identified.

The first vulnerability is a generic vulnerability for the ORNL site. Neither seismic nor wind capacity of many buildings has been evaluated per current DOE requirements. For Building 3019, this vulnerability applies to the areas outside of the storage tube vaults. This vulnerability does not indicate a lack of qualification, only a lack of evaluation.

The second vulnerability dealing with natural phenomena is a failure of HEPA filter equipment during an earthquake or a tornado. For example, tornado missiles could cause substantial damage to off-gas equipment that remains above ground, outside of Building 3019.

The final natural event vulnerability pertains to failure of Tank P-24 during an earthquake event. Tank P-24 is located in a concrete bunker next to Building 3019 and stores uranium and thorium nitrate solutions.

5.4.2 Natural Phenomena Hazards (NPH) Analysis

A complete NPH analysis for the Building 3019 complex is being performed in conjunction with the preparation of the SAR and TSR for Building 3019. This evaluation is scheduled for completion in fiscal year (FY) 1999. The analysis is a study of the hazards posed by the occurrence of natural phenomena events. The NPH analysis requires (1) an initial walk-down of all structural and safety significant components and equipment at Building 3019, (2) soil characterization and liquefaction studies, (3) building evaluations, (4) stack evaluations, (5) vault evaluations, and (6) ventilation system evaluations. Design & Analysis Calculation (DAC) packages will document the results of the analyses. Three of the DACs have been issued. All calculations except evaluation of the ventilation system are complete and are being checked. Detailed evaluation of the ventilation system was deferred pending ongoing system modifications.

X-10, Bldg. 3019 Soil Amplification and Liquefaction (DAC-CV-020327-A001) was issued on 2/25/1998. Two foundation conditions were found: rock (weathered shale) for the original cell structure inside the east end of 3019 and soil strata potentially more than 10-ft deep elsewhere. Slopes were found to be stable and the foundation soils were not susceptible to liquefaction.

6. RESPONSE TO SUBRECOMMENDATIONS

The purpose of this report was to respond to Subrecommendations 3–6 of DNFSB Recommendation 97-1. This section summarizes actions that addressed those subrecommendations and describes further work to complete the response.

6.1 SUBRECOMMENDATION 3: INVENTORY CHARACTERIZATION

The ORNL inventory is characterized with respect to material, quantity, and type of container in Table 2.1. The containers are qualitatively ranked with respect to condition by the risk assessment of Sect. 3.2.4. The inspection and repackaging program described in Sect. 4 will verify packaging details and allow further assessment of package conditions.

6.2 SUBRECOMMENDATION 4: STORAGE SYSTEM EVALUATION

The storage system evaluation is detailed in Sect. 5. A series of preliminary inspections were undertaken in an attempt to detect problems within the storage system. No abnormal conditions were observed.

Three major analyses also have examined the condition of the storage system: (1) vulnerability assessment, (2) ventilation requirements, and (3) natural phenomena analysis. Six vulnerabilities were found. Preliminary results, which are still in preparation and review, indicate numerous weaknesses with respect to ventilation requirements and NPH.

6.3 SUBRECOMMENDATION 5: ASSESSMENT OF PACKAGES VS STANDARDS.

Inventory records were compared to the draft storage standard with respect to material form, packaging type, and container closure. The results of these comparisons were used to plan the container inspections as shown in Figure 4.1. Any further discoveries during the inspection process may warrant modifications to this plan.

6.4 SUBRECOMMENDATION 6: PROGRAMS TO REMEDY SHORTFALLS

The inspection and repackaging plan is designed so that, upon its conclusion, all packages will be in compliance with the storage standard. A DOE plan is in place to remedy the vulnerabilities. Because of uncertainties in the long-term status of Building 3019 as a ^{233}U repository, actions to remedy ventilation and NPH weaknesses are difficult to project since in many cases the degree or necessity of certain upgrades are dependent on the long-term mission of Building 3019. However, a preliminary list of projects necessary for interim storage is given in Table 6.1. This set represents the minimum near-term upgrades necessary for continued safe storage.

REFERENCES

Bereolos, P. J., C. W. Forsberg, D. C. Kocher, and A. M. Krichinsky. 1998. *Strategy for Future Use and Disposition of Uranium-233: Technical Information*, ORNL/TM/, Lockheed Martin Energy Research, Oak Ridge National Laboratory, Oak Ridge, Tennessee.

Brooksbank, R. E., Sr., B. D. Patton, and A. M. Krichinsky. 1994. *Historical and Programmatic Overview of Building 3019*, ORNL/TM-12720, Oak Ridge National Laboratory, Oak Ridge, Tennessee.

Chemical Technology Division. 1996*a*. *Basis for Interim Operations (BIO) Building 3019 Complex — Radiochemical Development Facility (RDF)*, BIO/3019-CTD/SSE/R0, Oak Ridge National Laboratory, Oak Ridge, Tennessee.

Chemical Technology Division. 1996*b*. *Operational Safety Requirements for Radiochemical Development Facility*, OSR/3019-CTD/R1, Oak Ridge National Laboratory, Oak Ridge, Tennessee.

Chemical Technology Division. 1996*c*. Unreviewed Safety Question Determination for Receipt of U-233 from EG&G Mound Applied Technologies, USQD/3019-CTD/SSE/R1, Oak Ridge National Laboratory, Oak Ridge, Tennessee.

Defense Nuclear Facilities Safety Board. 1997*a*. *Recommendation 97-1 to the Secretary of Energy*, Washington, D.C.

Defense Nuclear Facilities Safety Board. 1997*b*. *Uranium-233 Storage Safety at Department of Energy Facilities*, DNFSB/TECH-13, Washington, D.C.

Department of Energy, U.S. 1996. *Highly Enriched Uranium Working Group Report on Environmental, Safety, and Health Vulnerabilities Associated with the Department's Storage of Highly Enriched Uranium*, DOE/EH-0525, Washington, D.C.

Department of Energy, U.S. 1997*a*. *Safe Storage of Uranium-233*, Washington, D.C.

Department of Energy, U.S. 1997*b*. *Environmental Safety & Health Highly Enriched Uranium Vulnerability Management Plan*.

Department of Energy, U.S. 1998. *DOE STANDARD (DRAFT). Criteria for Packaging and Storing Uranium-233-Bearing Materials*. Project No. SAFT-0067. Washington, D.C.

Forsberg, C.W., and A.M. Krichinsky. 1998. *Strategy for the Future Use and Disposition of ^{233}U: Overview*. ORNL/TM-13550, Oak Ridge National Laboratory, Oak Ridge, Tennessee.

Primm, R. T., III, C. M. Hopper, and G. R. Smolen. 1992. *Criticality Safety Studies for the Storage of Waste from Nuclear Fuel Services in Intercell Storage Wells 2 and 3 of Building 3019*, ORNL/TM-12152, Oak Ridge National Laboratory, Oak Ridge, Tennessee.

Primm, R. T., III. 1993, *Criticality Safety Studies of Building 3019 Cell 4 and In-Line Storage Wells*, ORNL/TM-12374, Oak Ridge National Laboratory, Oak Ridge, Tennessee.

Webb, O. F. December 20, 1996. "Remedial Action for Vulnerability ORNL/B3019/SAT/003," memorandum to A. M. Krichinsky, Oak Ridge National Laboratory, Oak Ridge, Tennessee.

APPENDIX A: CAN DRAWINGS

This appendix contains drawings of the packaging configuration for the packages stored in the Building 3019 tube vaults. Further details may be found in Table 2.1.

CONFIGURATION APPLIES TO AUA-67 & AUA-70 ONLY.
APPLIES TO 2 OUTER PACKAGES CONTAINING A TOTAL OF 5.9 kg ^{233}U.
(ALL DIMENSIONS ARE NOMINAL)

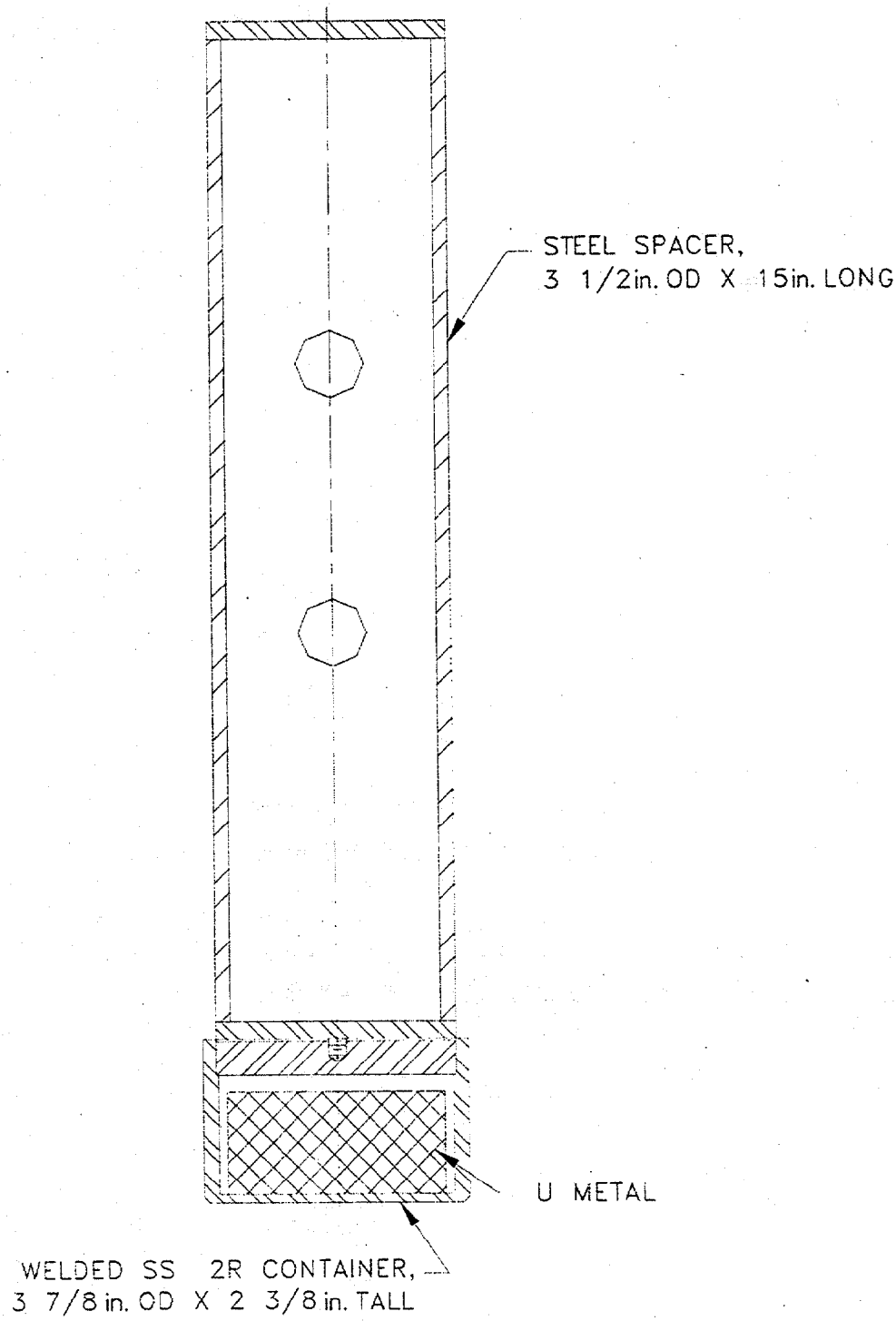

Fig. A.1. LANL package assembly

CONFIGURATION APPLIES TO LZB-22 AND LZB-22-1 ONLY.
THIS REPRESENTS THE PRESUMED CONFIGURATION.
DETAILS OF ACTUAL ASSEMBLY NOT AVAILABLE.
APPLIES TO 6 OUTER PACKAGES CONTAINING A TOTAL OF 2.9 kg ^{233}U.
(ALL DIMENSIONS ARE NOMINAL AND INFERRED FROM DESCRIPTIONS)

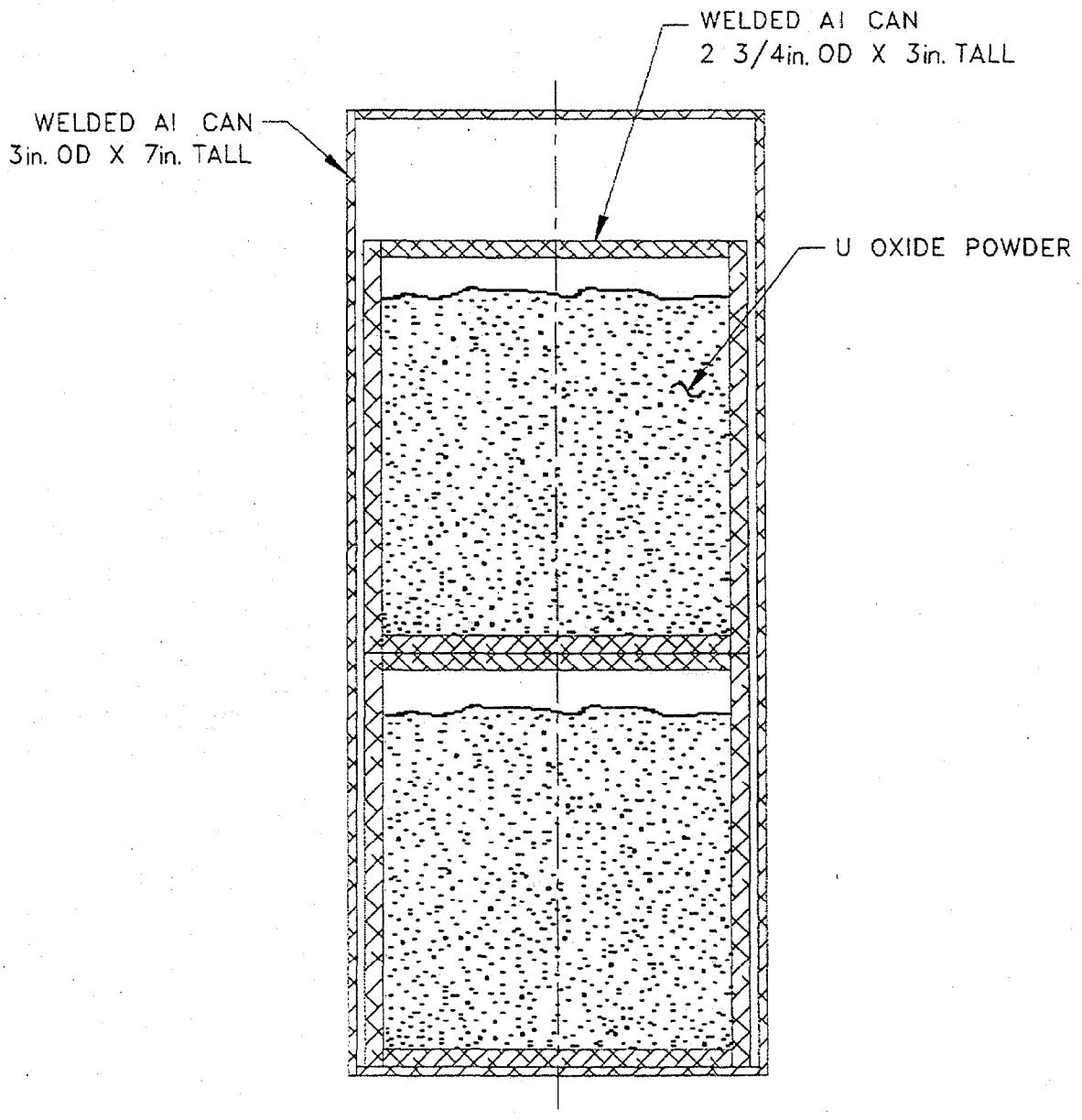

Fig. A.3. SAVANNAH RIVER LZB package assembly

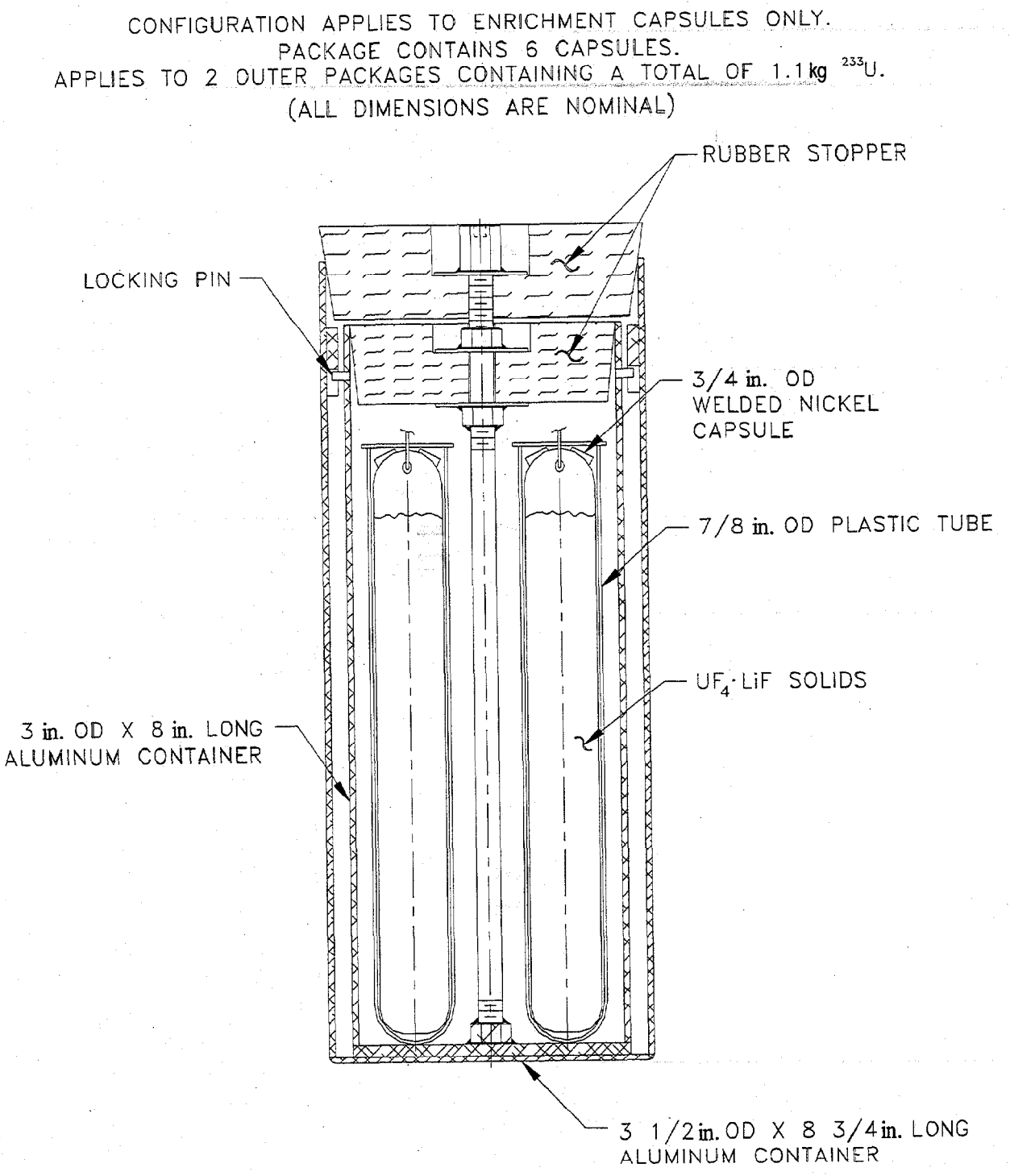

Fig. A.5. RCP-04 (ENRICHMENT CAPSULE) package assembly

CONFIGURATION APPLIES TO T-2 VESSEL HEEL ONLY.
APPLIES TO 1 OUTER PACKAGE CONTAINING A TOTAL OF 0.3 kg ^{233}U
(ALL DIMENSIONS ARE NOMINAL)

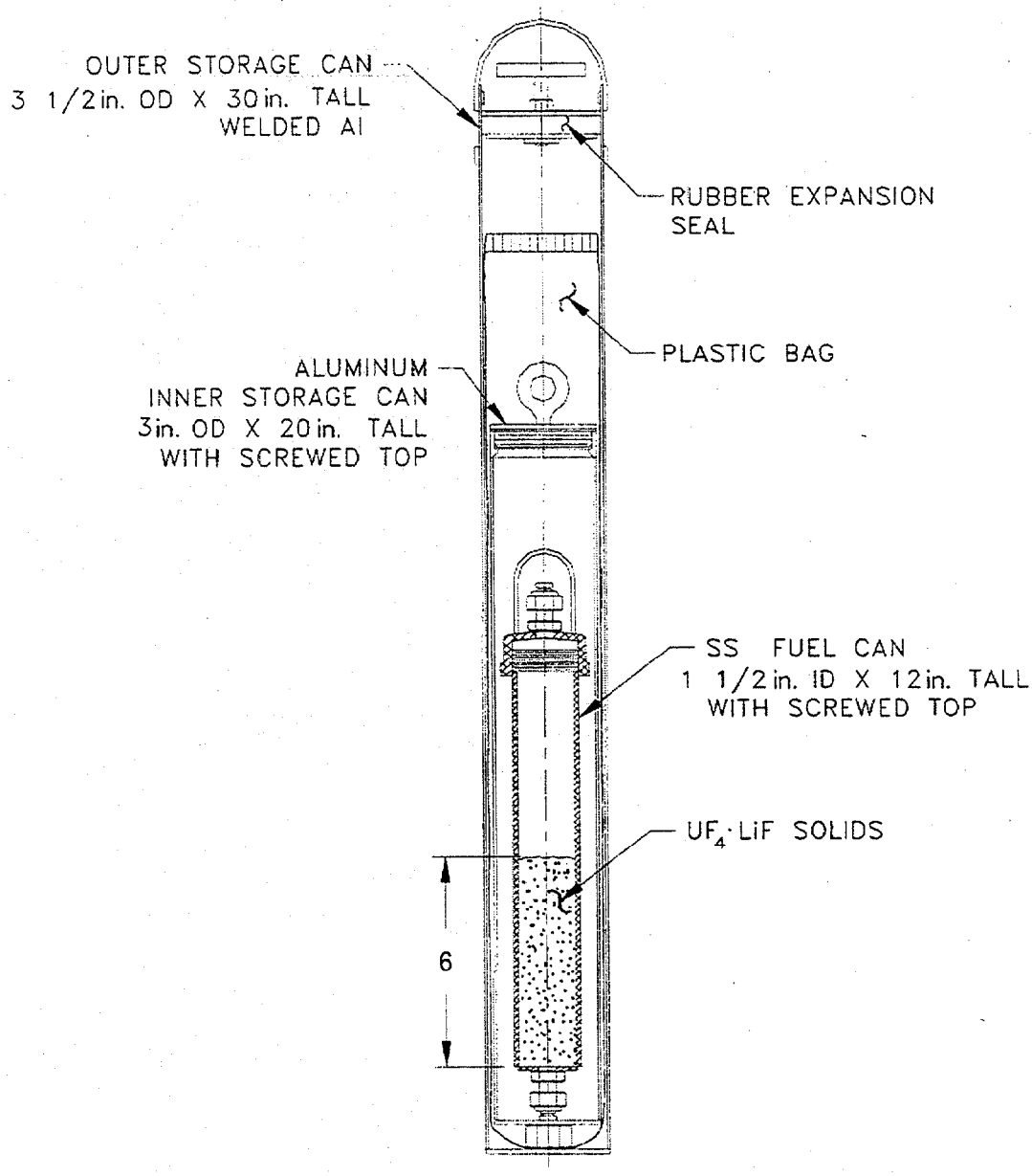

Fig. A.7. RCP-04 (T-2 VESSEL HEEL) package assembly

CONFIGURATION APPLIES TO RCP-02 AND RCP-03 ONLY.
THIS REPRESENTS THE PRESUMED CONFIGURATION.
DETAILS OF ACTUAL ASSEMBLY NOT AVAILABLE.
APPLIES TO 167 OUTER PACKAGES CONTAINING A TOTAL OF 72.3 kg ^{233}U
(ALL DIMENSIONS ARE NOMINAL AND INFERRED FROM DESCRIPTIONS)

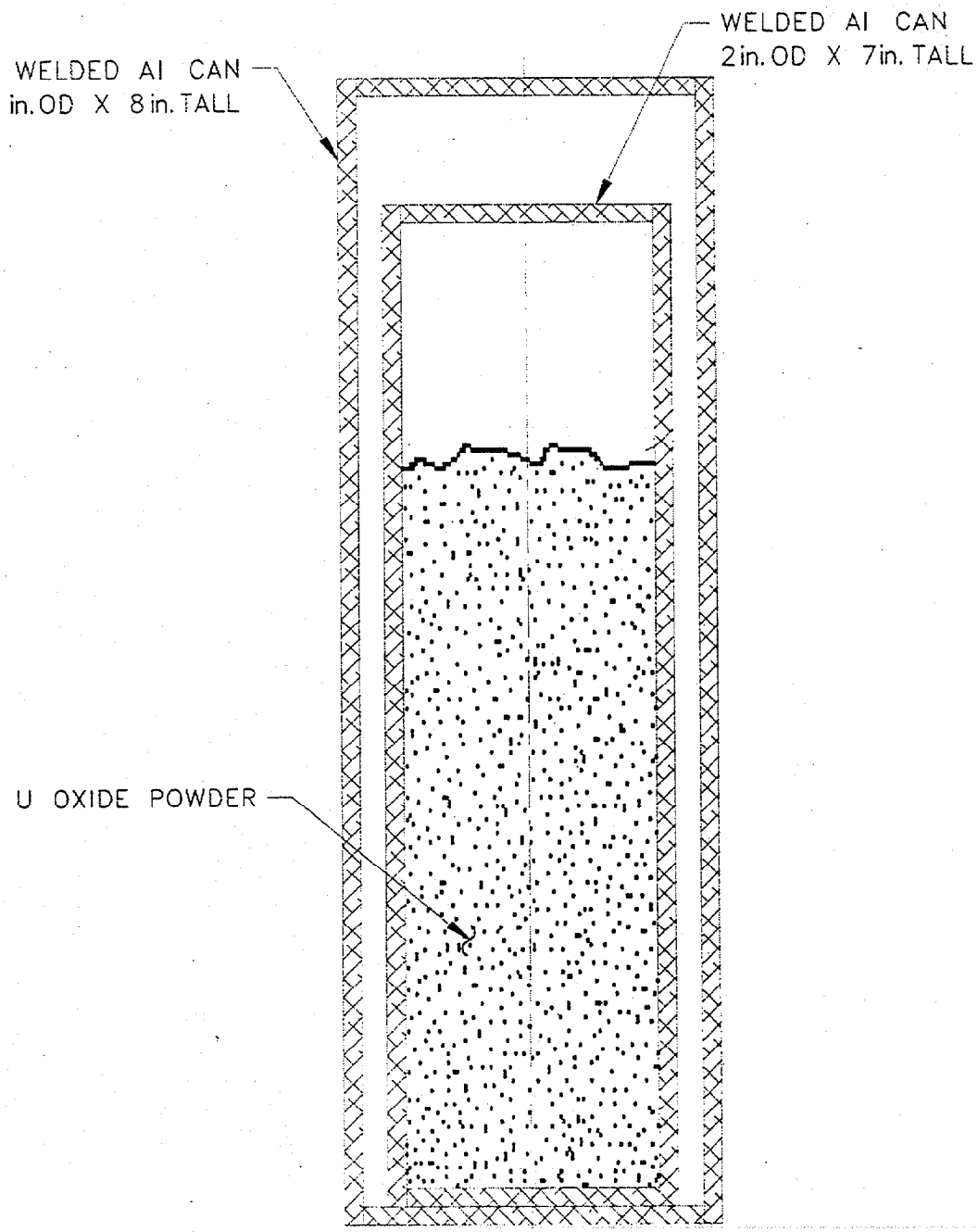

Fig. A.9. SAVANNAH RIVER ALUMINUM package assembly

ORNL DWG 99-05453

CONFIGURATION APPLIES TO OX-305, -306(-1), -306(-2), -307, AND -309 ONLY.
APPLIES TO 71 OUTER PACKAGES CONTAINING A TOTAL OF 33.5 kg ^{235}U.
(ALL DIMENSIONS ARE NOMINAL)

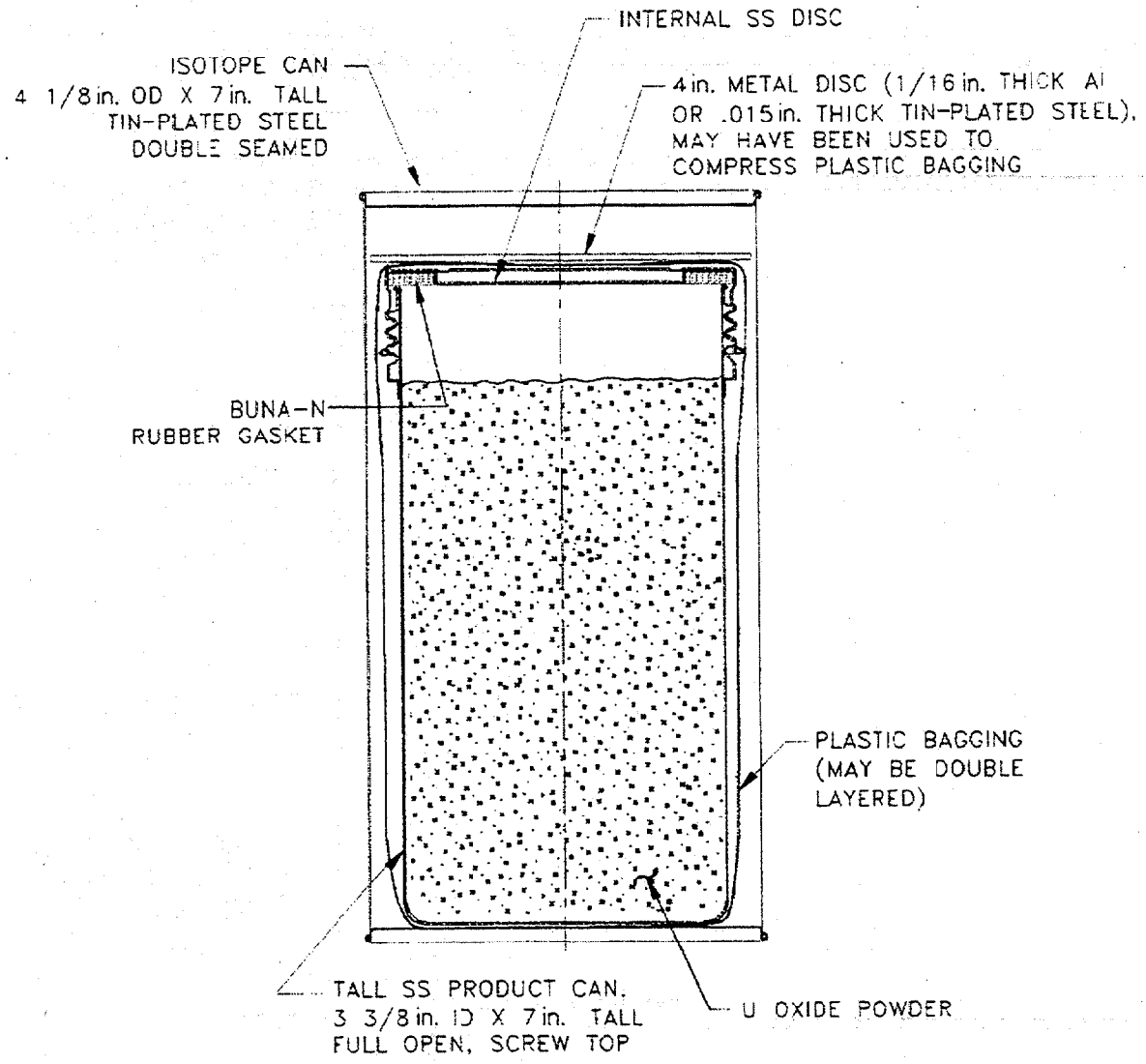

Fig. A.11. TALL OXIDE-PRODUCT CAN package assembly

CONFIGURATION APPLIES TO ANL-10B AND ANL-10D ONLY.
(5 PACKETS PER OUTER ISOTOPE CAN)
APPLIES TO 2 OUTER PACKAGES CONTAINING A TOTAL OF 0.3 kg ^{233}U.
(ALL DIMENSIONS ARE NOMINAL)

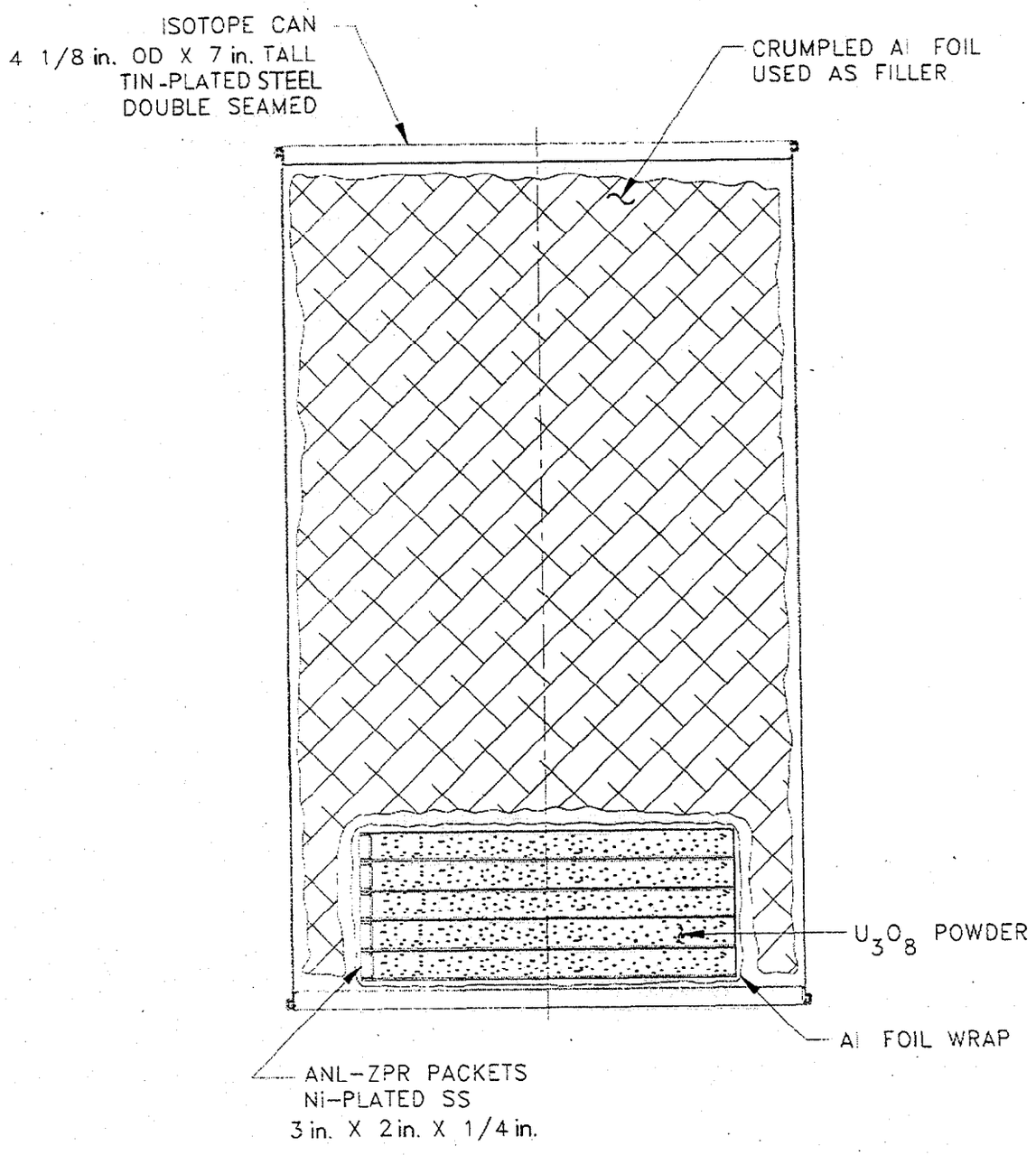

Fig. A.13. ANL-ZPR (5 PACKET) package assembly

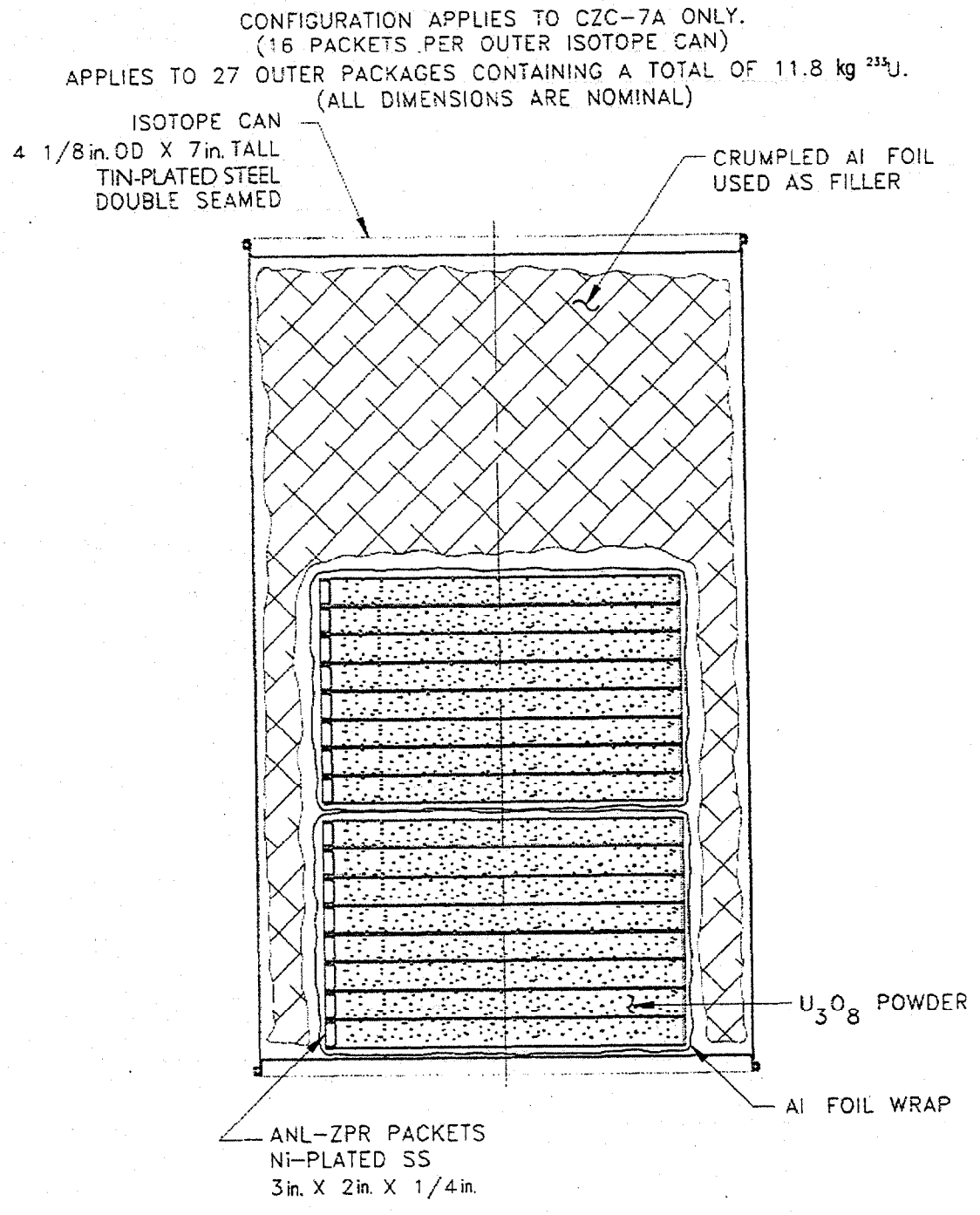

Fig. A.15. ANL-ZPR (16 PACKET) package assembly

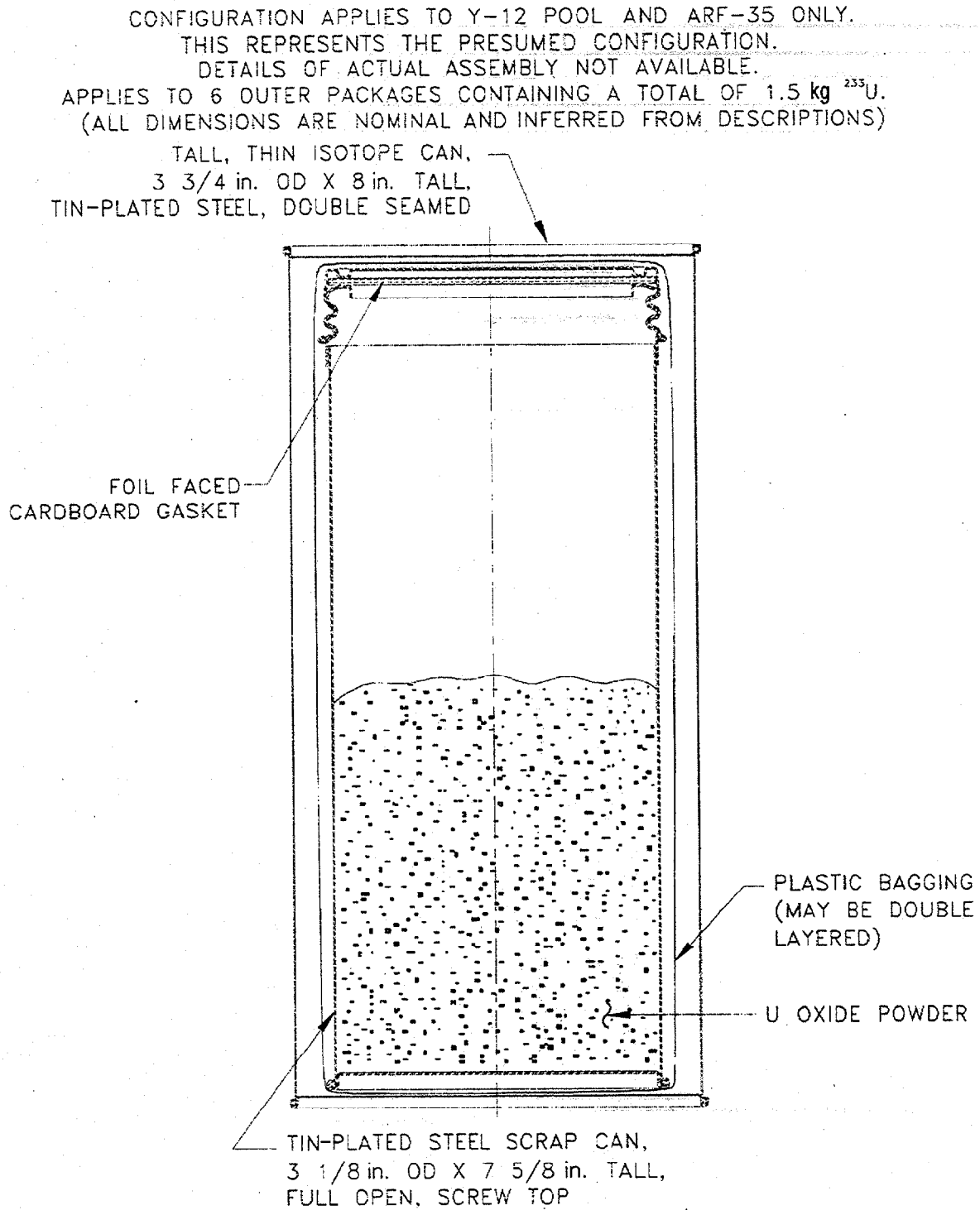

Fig. A.17. OXIDE package assembly

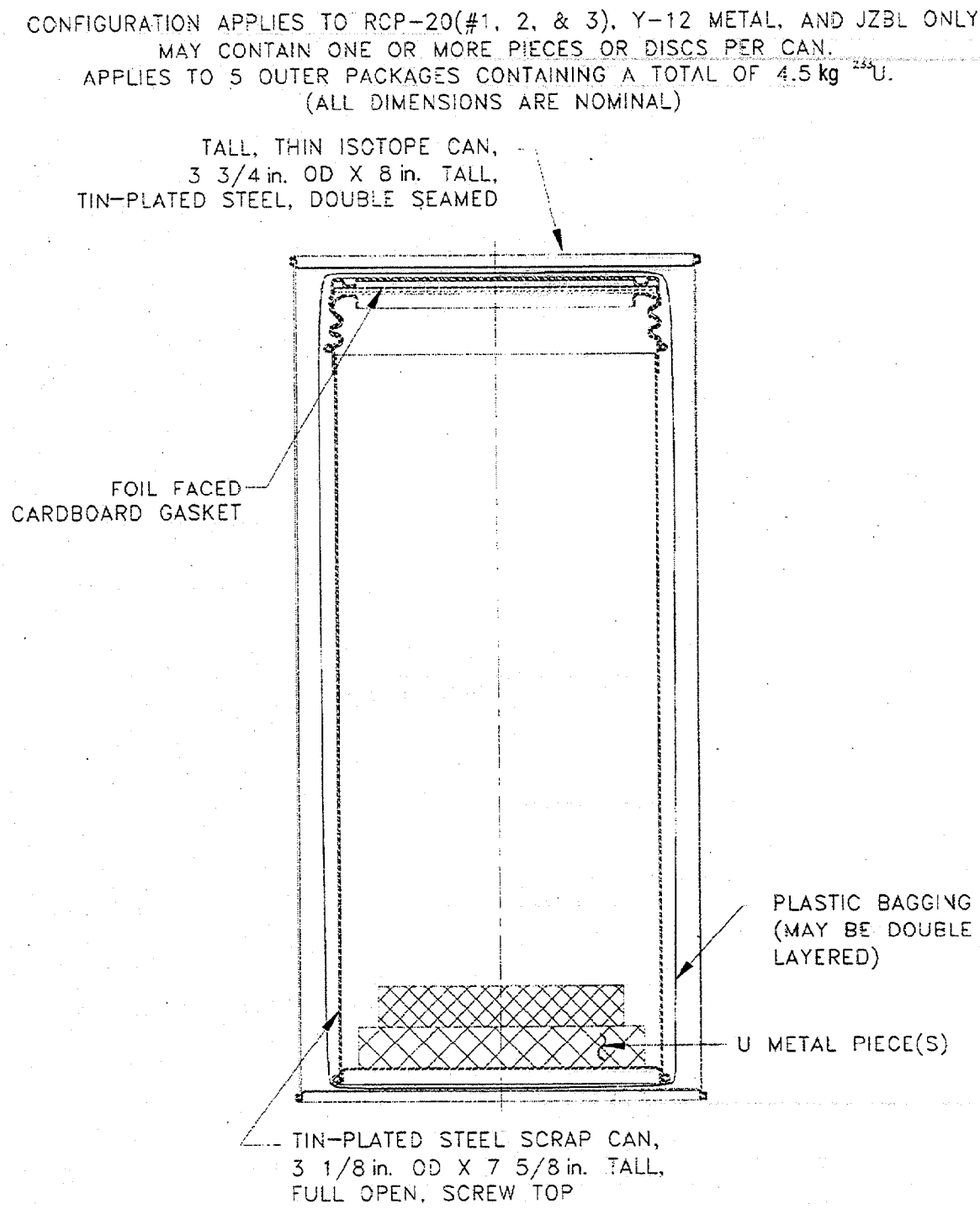

Fig. A.19. METAL SCRAP package assembly

CONFIGURATION APPLIES TO HUA-2A AND HUA-2B ONLY.
THIS REPRESENTS THE PRESUMED CONFIGURATION.
DETAILS OF ACTUAL ASSEMBLY NOT AVAILABLE.
APPLIES TO 6 OUTER PACKAGES CONTAINING A TOTAL OF 0.3 kg ^{233}U.
(ALL DIMENSIONS ARE NOMINAL AND INFERRED FROM DESCRIPTIONS.)

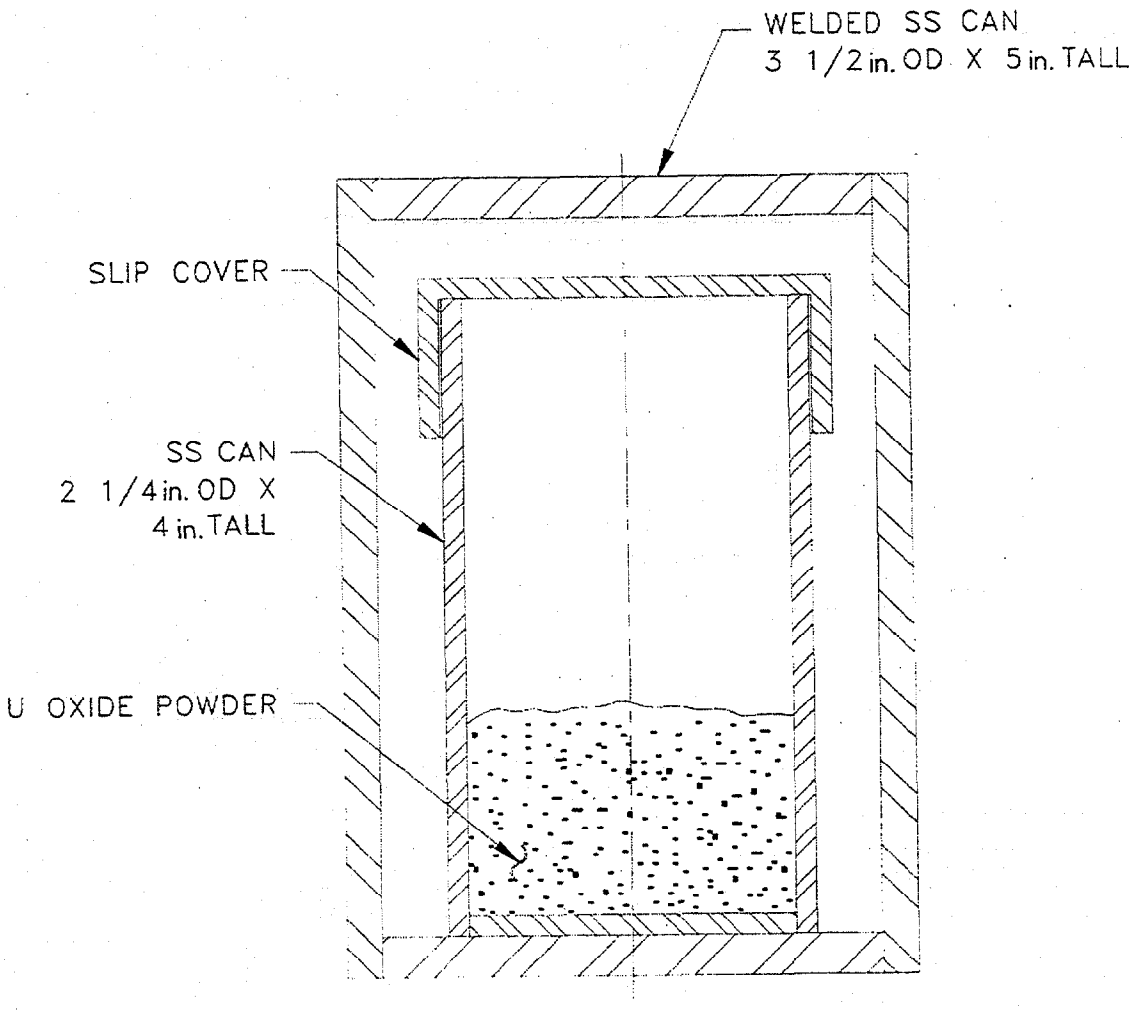

Fig. A.21. HANFORD HUA-2 package assembly

CONFIGURATION APPLIES TO U-TH-SPH AND RCP-18 ONLY.
PACKAGE MAY CONTAIN THREE OR MORE SAMPLE BOTTLES.
APPLIES TO 3 OUTER PACKAGES CONTAINING A TOTAL OF 0.4 kg ^{233}U.
(ALL DIMENSIONS ARE NOMINAL)

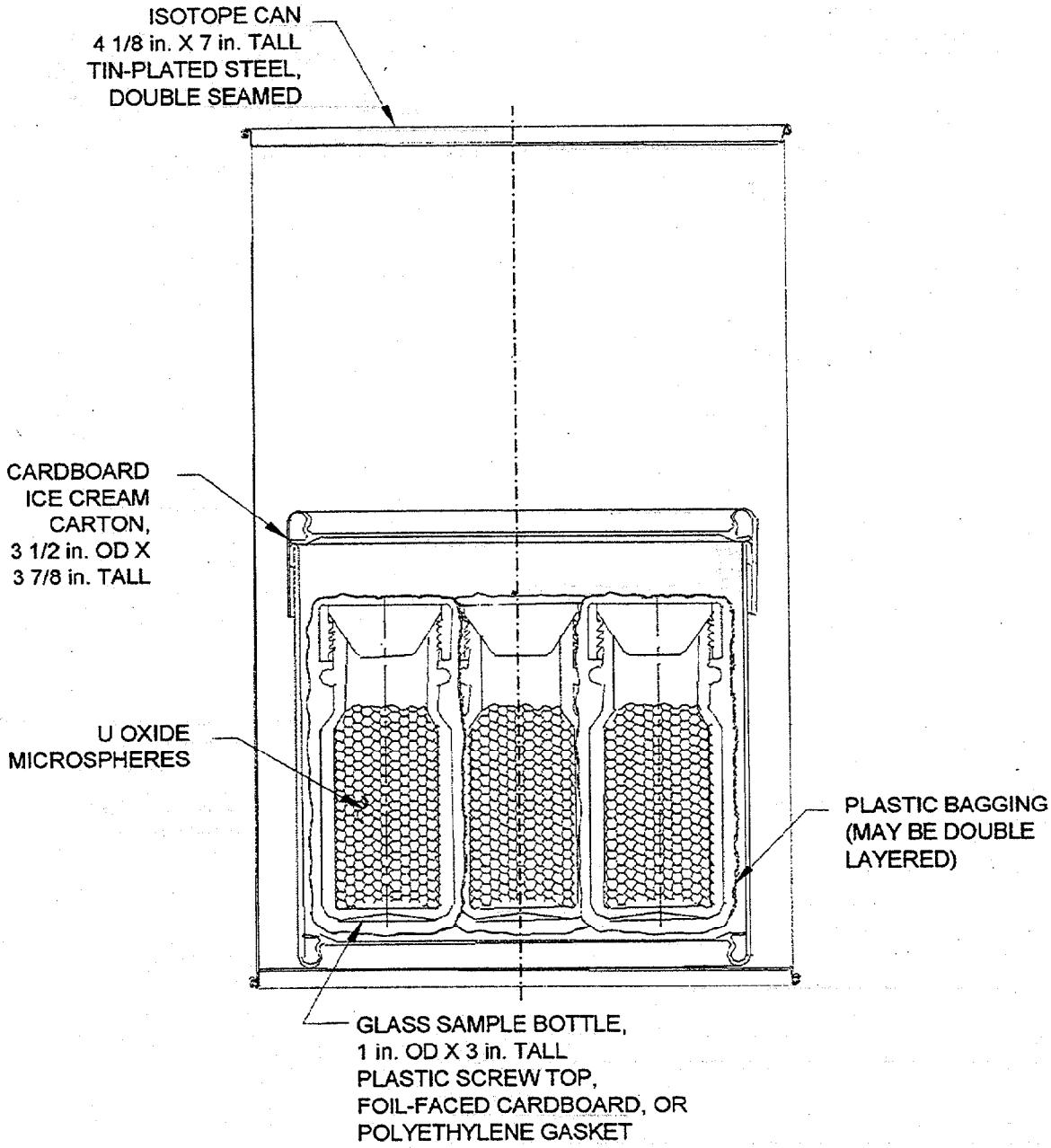

Fig. A.23. ORNL-RDF MISCELLANEOUS SAMPLES package assembly

CONFIGURATION APPLIES TO ADU-SCRAP ONLY
APPLIES TO 1 OUTER PACKAGE CONTAINING A TOTAL OF 0.1kg ^{233}U.
(ALL DIMENSIONS ARE NOMINAL)

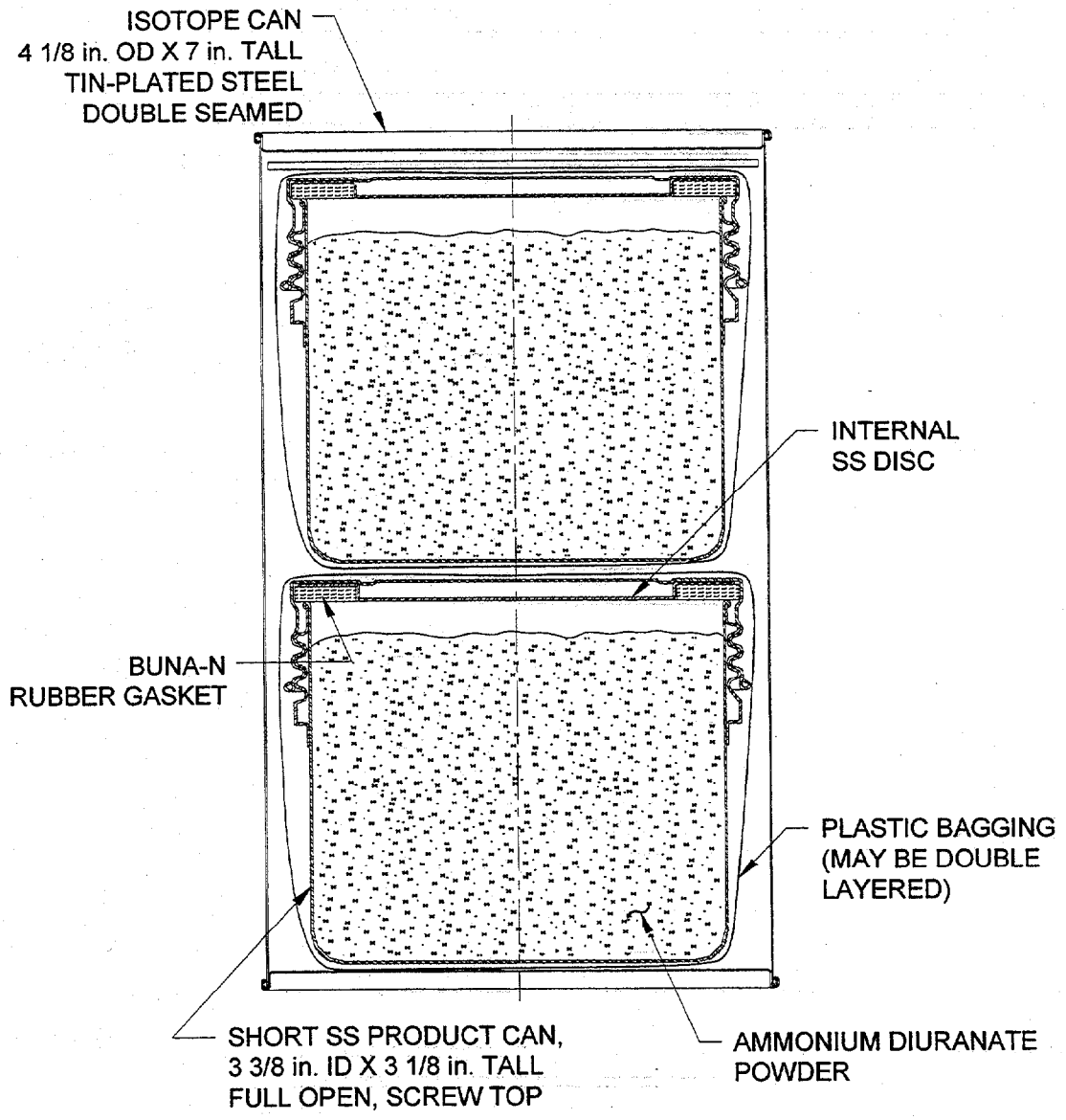

Fig. A.25. ADU PRODUCT package assembly

CONFIGURATION APPLIES TO ONE OUTER PACKAGE CONTAINING 0.073 kg ^{233}U.
THIS REPRESENTS THE PRESUMED CONFIGURATION.
DETAILS OF ACTUAL ASSEMBLY NOT AVAILABLE.
(ALL DIMENSIONS NOMINAL AND INFERRED FROM DESCRIPTIONS)

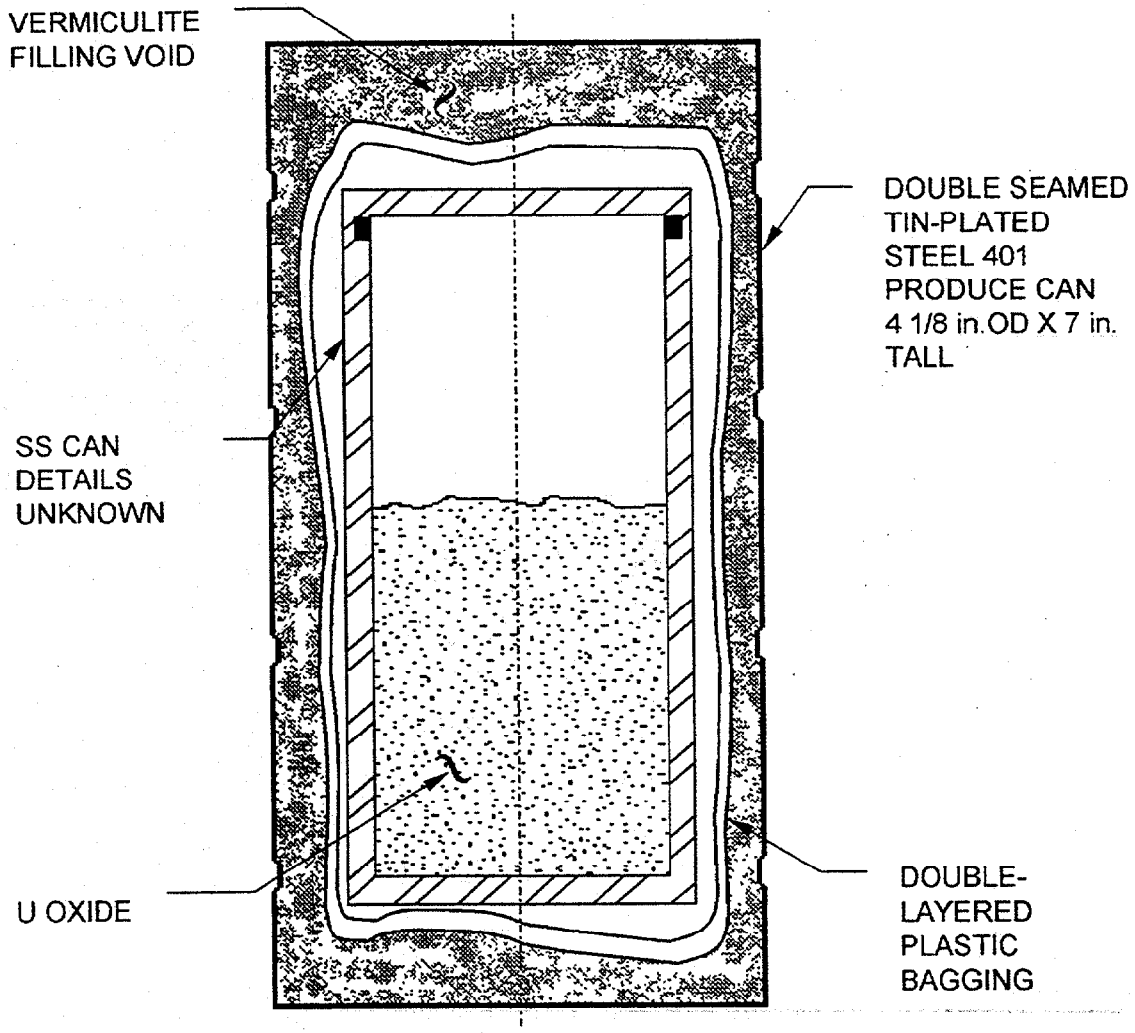

Fig. A.27. ARF-32 package assembly

APPLIES TO ONE OUTER PACKAGE CONTAINING A TOTAL OF 0.573 kg ^{233}U.
THIS REPRESENTS THE PRESUMED CONFIGURATION.
DETAILS OF ACTUAL ASSEMBLY NOT AVAILABLE.
(ALL DIMENSIONS ARE NOMINAL AND INFERRED FROM DESCRIPTIONS)

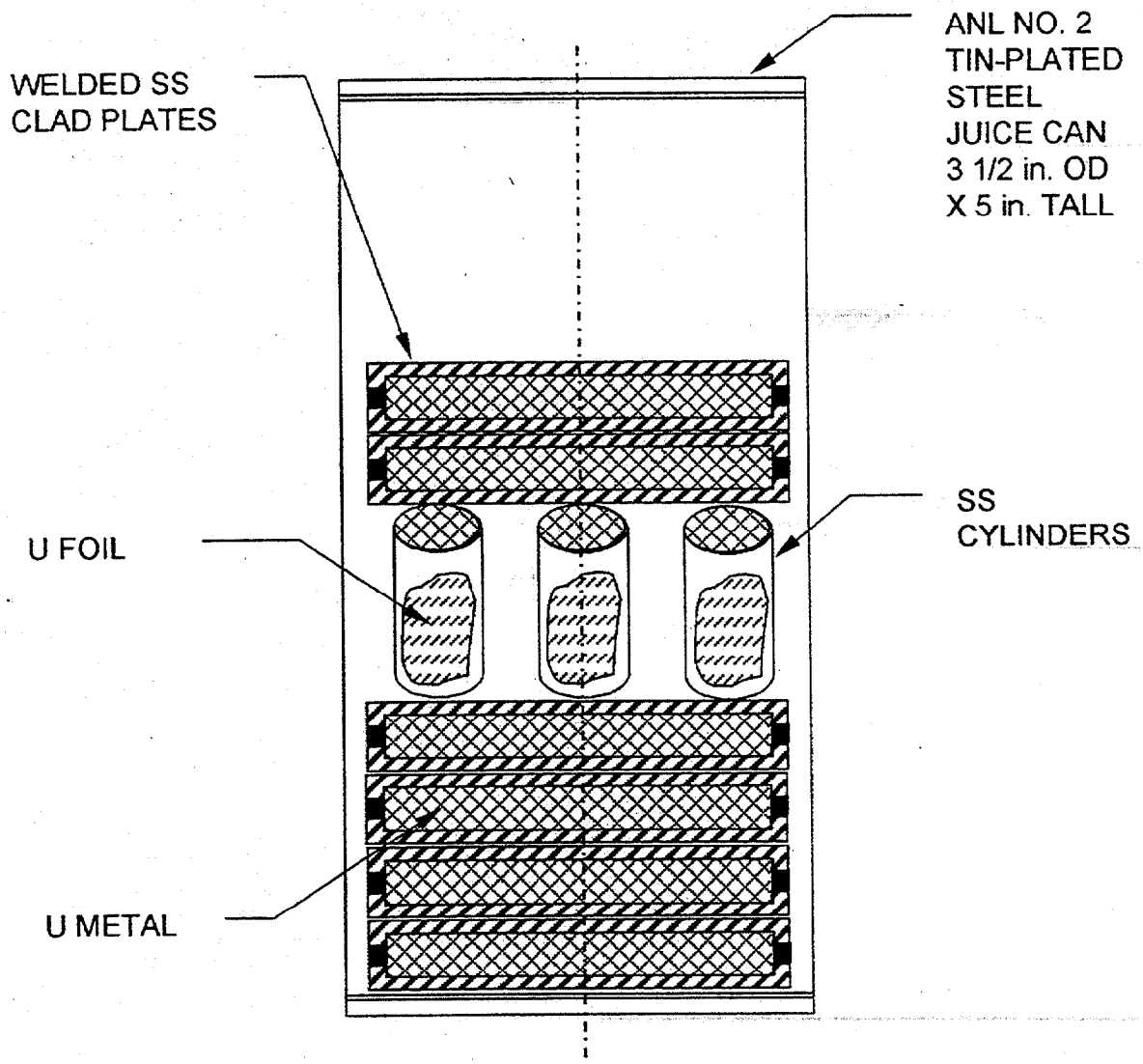

Fig. A.29. CZA-90 package assembly

APPLIES TO ONE OUTER PACKAGE CONTAINING 0.09 kg ^{233}U.
THIS REPRESENTS THE PRESUMED CONFIGURATION.
DETAILS OF ACTUAL ASSEMBLY NOT AVAILABLE.
(ALL DIMENSIONS ARE NOMINAL AND INFERRED FROM DESCRIPTIONS)

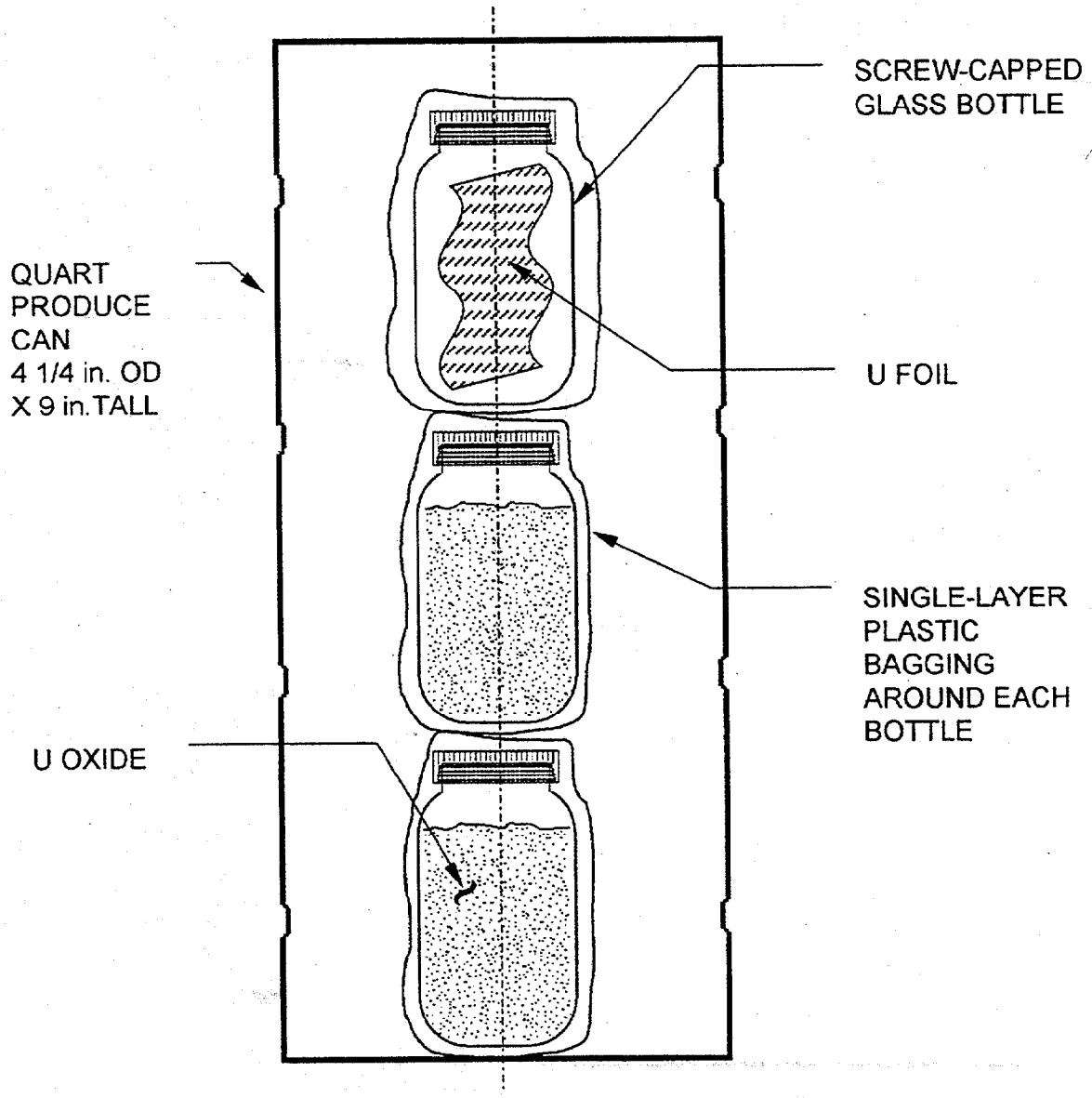

Fig. A.31. CZD-G (CZ) package assembly.

APPLIES TO ONE OUTER PACKAGE CONTAINING 0.0324 kg ^{233}U.
THIS REPRESENTS THE PRESUMED CONFIGURATION.
DETAILS OF ACTUAL ASSEMBLY NOT AVAILABLE.
(ALL DIMENSIONS ARE NOMINAL AND INFERRED FROM DESCRIPTIONS)

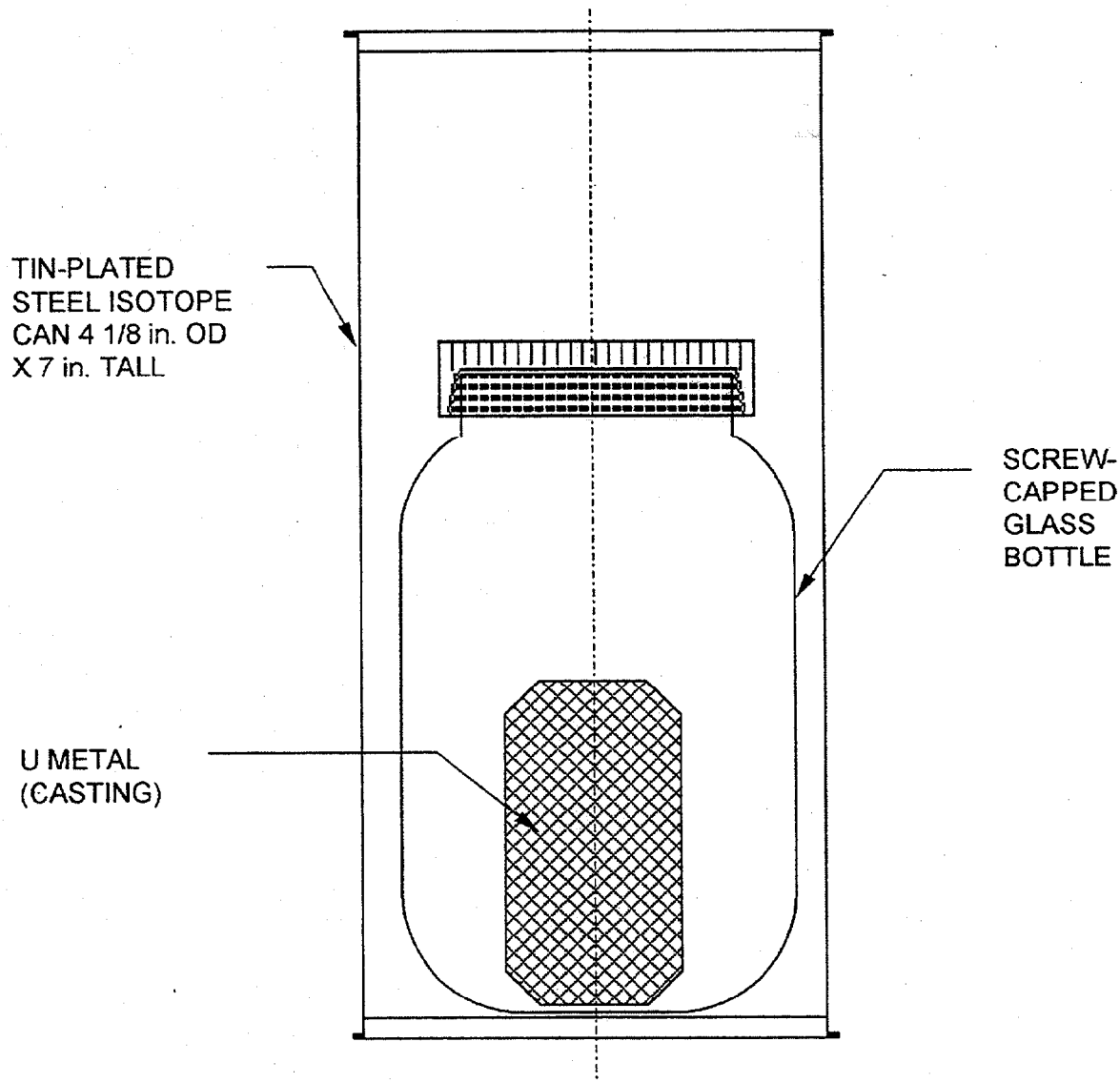

Fig. A.33. SNM-4031 package assembly

APPLIES TO TWO OUTER PACKAGES CONTAINING 0.456 kg ^{233}U.
THIS REPRESENTS THE PRESUMED CONFIGURATION.
DETAILS NOT AVAILABLE.
CONFIGURATIONS DIFFER SLIGHTLY - CONTAINER #5 IS ILLUSTRATED,
CONTAINER #6 HOLDS 1 JAR AND 2 CANS OF UNKNOWN CONSTRUCTION.
(ALL DIMENSIONS ARE NOMINAL AND INFERRED FROM DESCRIPTIONS)

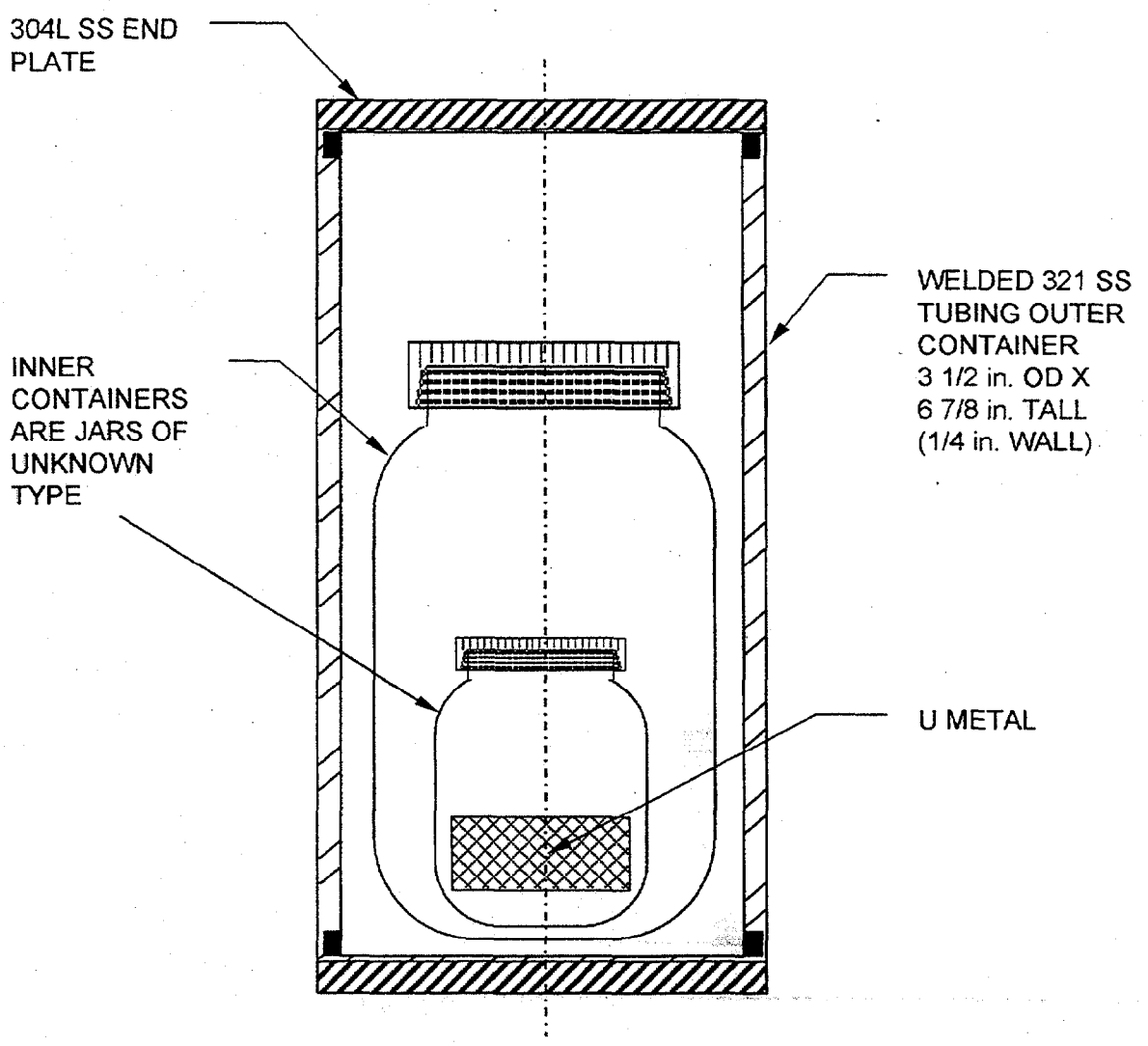

Fig. A.35. AUA-84 (JAR) package assembly

APPLIES TO THREE OUTER PACKAGES CONTAINING 0.241 kg ^{233}U.
THIS REPRESENTS THE PRESUMED CONFIGURATION.
DETAILS NOT AVAILABLE. ONE OUTER PACKAGE CONTAINS TWO INNER CANS.
(ALL DIMENSIONS ARE NOMINAL AND INFERRED FROM DESCRIPTIONS)

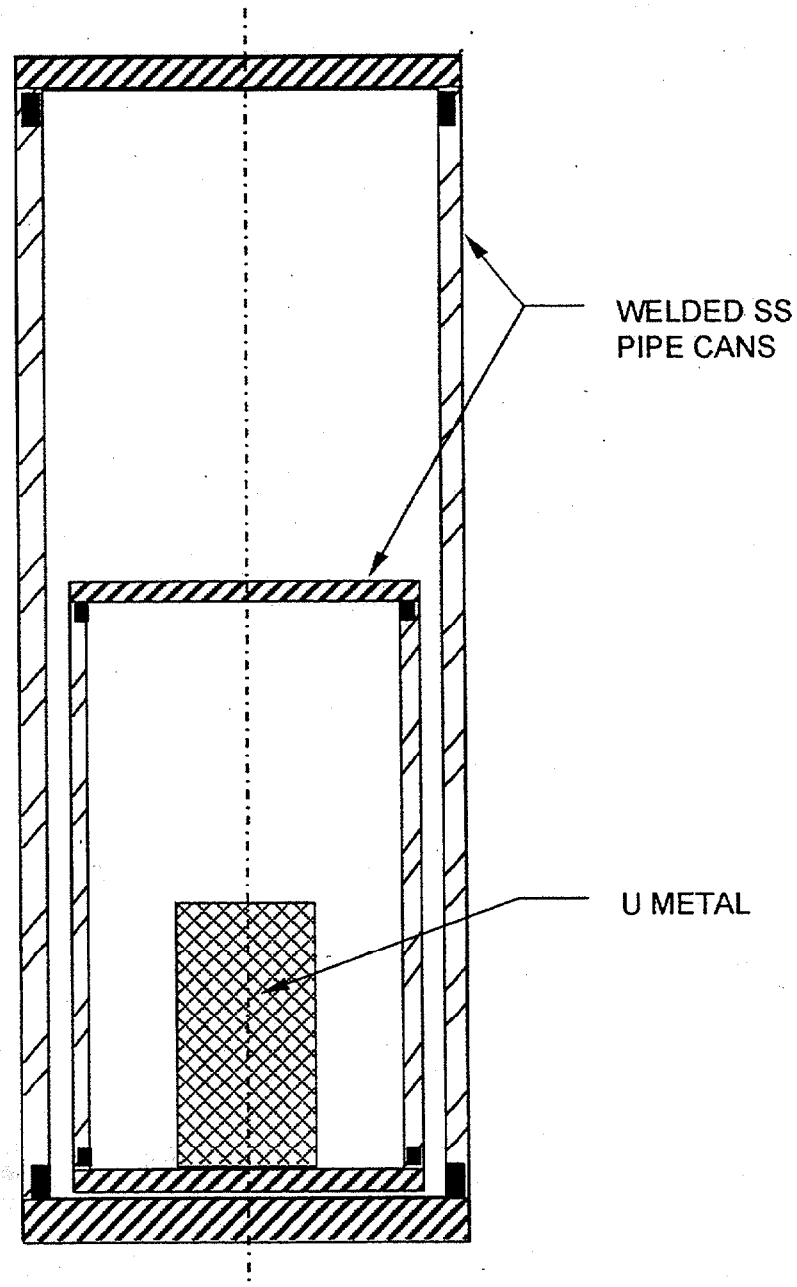

Fig. A.37. KZA-G1B package assembly

APPLIES TO ONE OUTER PACKAGE CONTAINING A TOTAL OF 0.515 kg ^{233}U.
(ALSO IDENTIFIED AS RCP-21).
(ALL DIMENSIONS ARE NOMINAL AND INFERRED FROM DESCRIPTIONS)

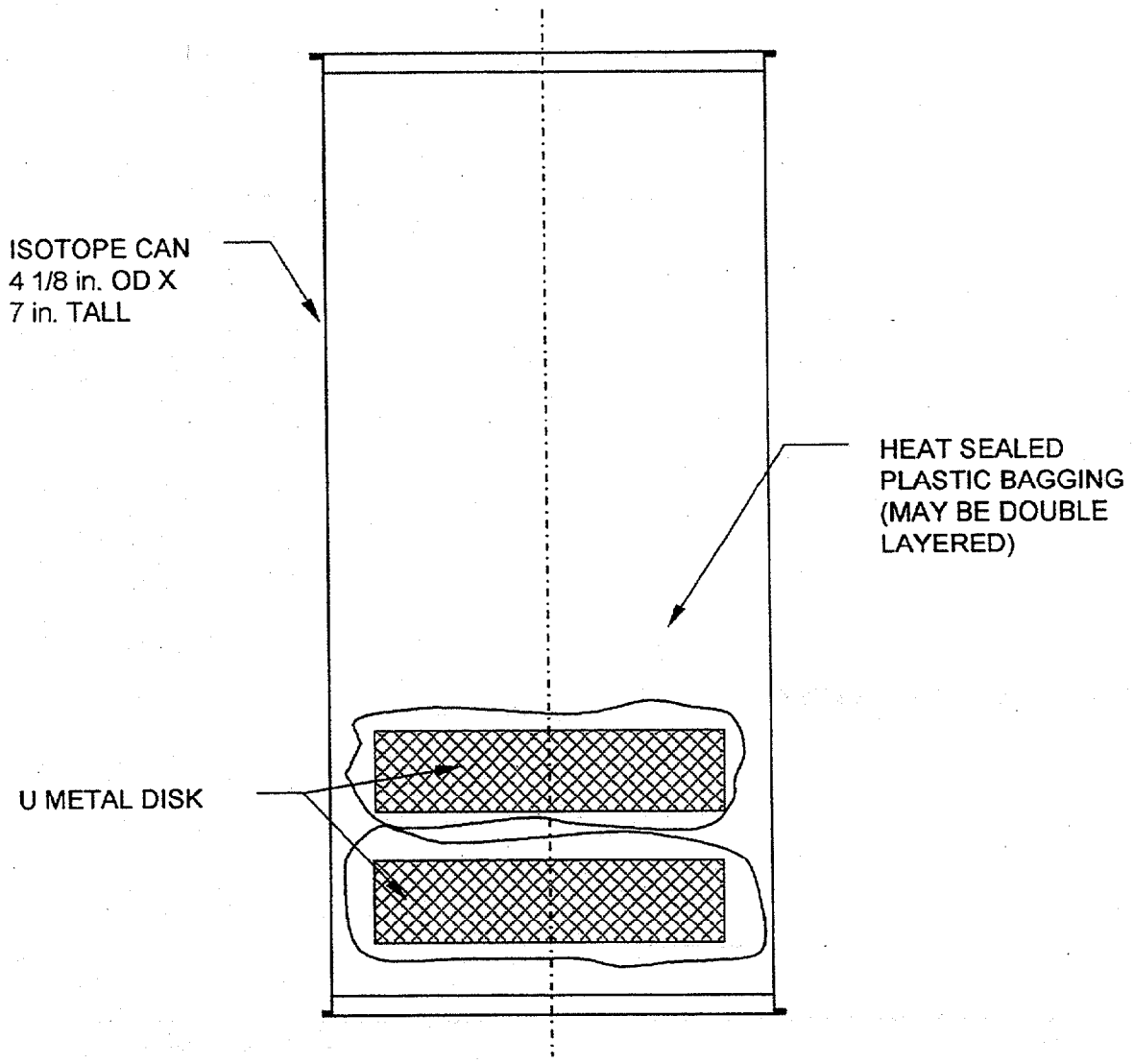

Fig. A.39. LAW-40 package assembly

APPLIES TO TWO OUTER PACKAGES CONTAINING A TOTAL OF 1.214 kg ^{233}U.
THIS REPRESENTS THE PRESUMED CONFIGURATION.
DETAILS OF ACTUAL ASSEMBLY NOT AVAILABLE
(DIMENSIONS ARE NOMINAL AND INFERRED FROM DESCRIPTIONS)

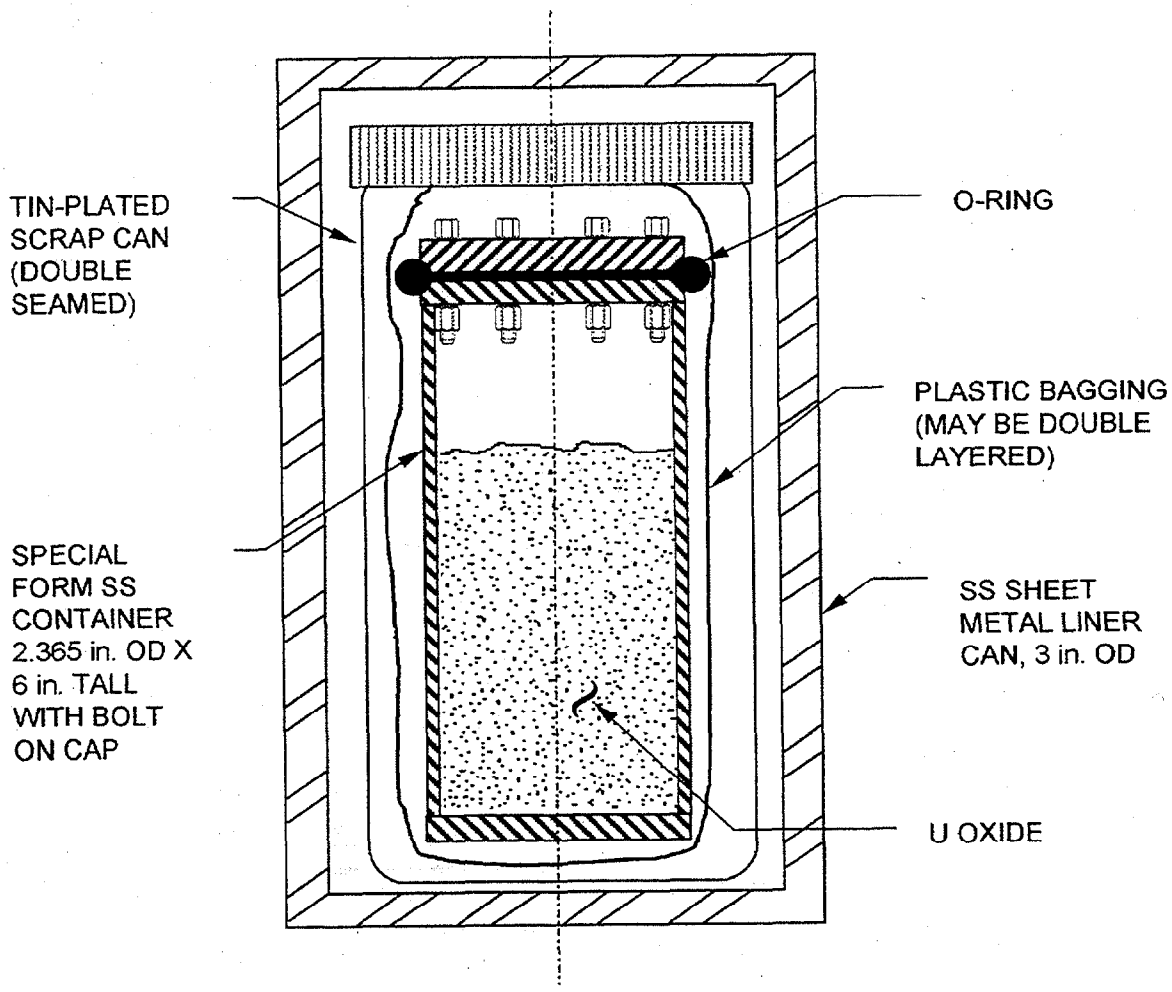

Fig. A.41. ARF-33 (OXIDE) package assembly

ORNL DWG 99-05485

APPLIES TO ONE OUTER PACKAGE CONTAINING A TOTAL OF 0.24 kg ^{233}U.
THIS REPRESENTS THE PRESUMED CONFIGURATION.
DETAILS OF ACTUAL ASSEMBLY NOT AVAILABLE.
(ALL DIMENSIONS ARE NOMINAL AND INFERRED FROM DESCRIPTIONS)

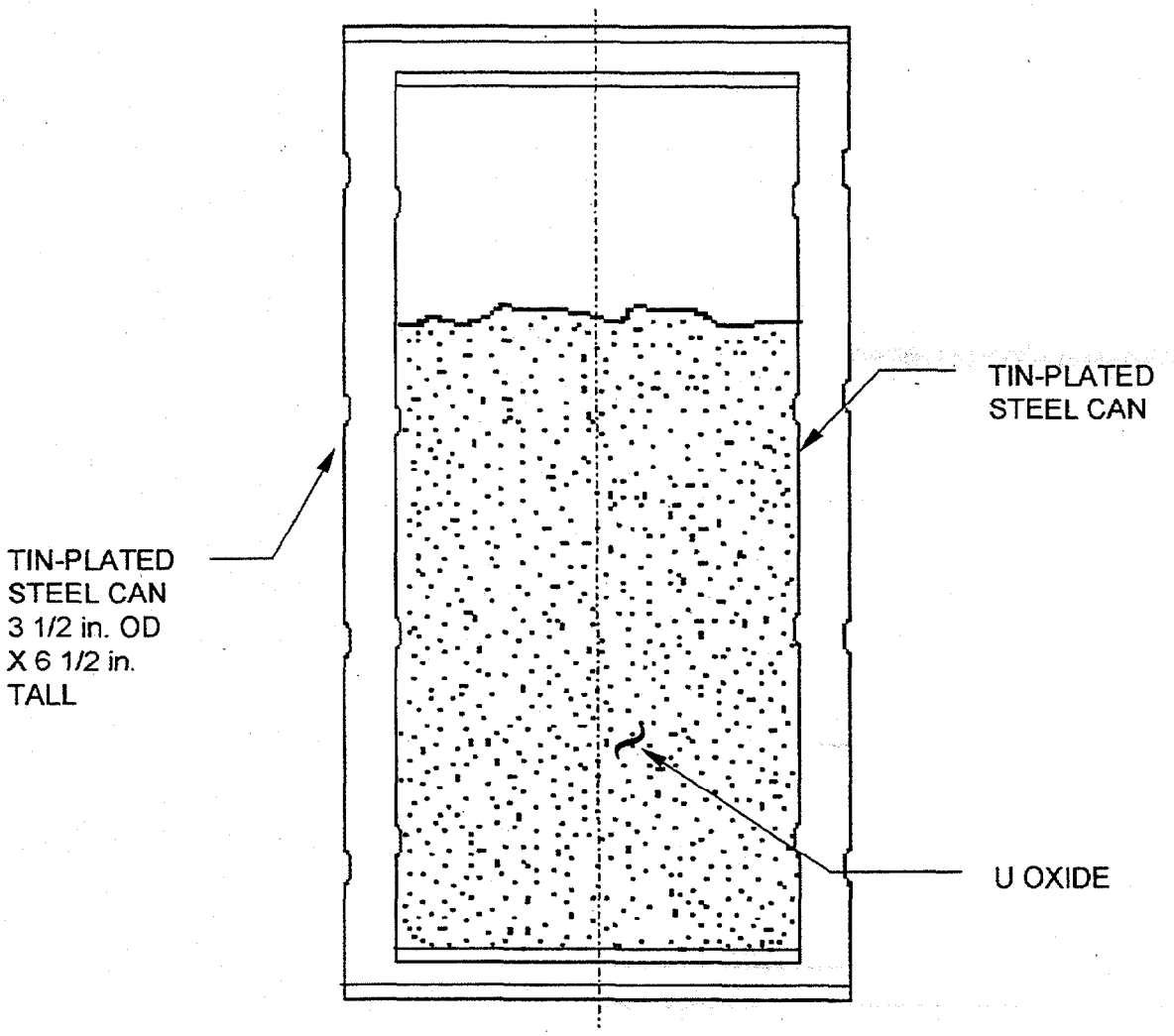

Fig. A.43. ASA-94 (233 - 4 - 74) package assembly

ORNL DWG 99-05487

APPLIES TO THREE OUTER PACKAGES CONTAINING A TOTAL OF 1.039 kg ^{233}U
THIS REPRESENTS THE PRESUMED CONFIGURATION.
DETAILS OF ACTUAL ASSEMBLY NOT AVAILABLE.
(ALL DIMENSIONS ARE NOMINAL AND INFERRED FROM DESCRIPTIONS)

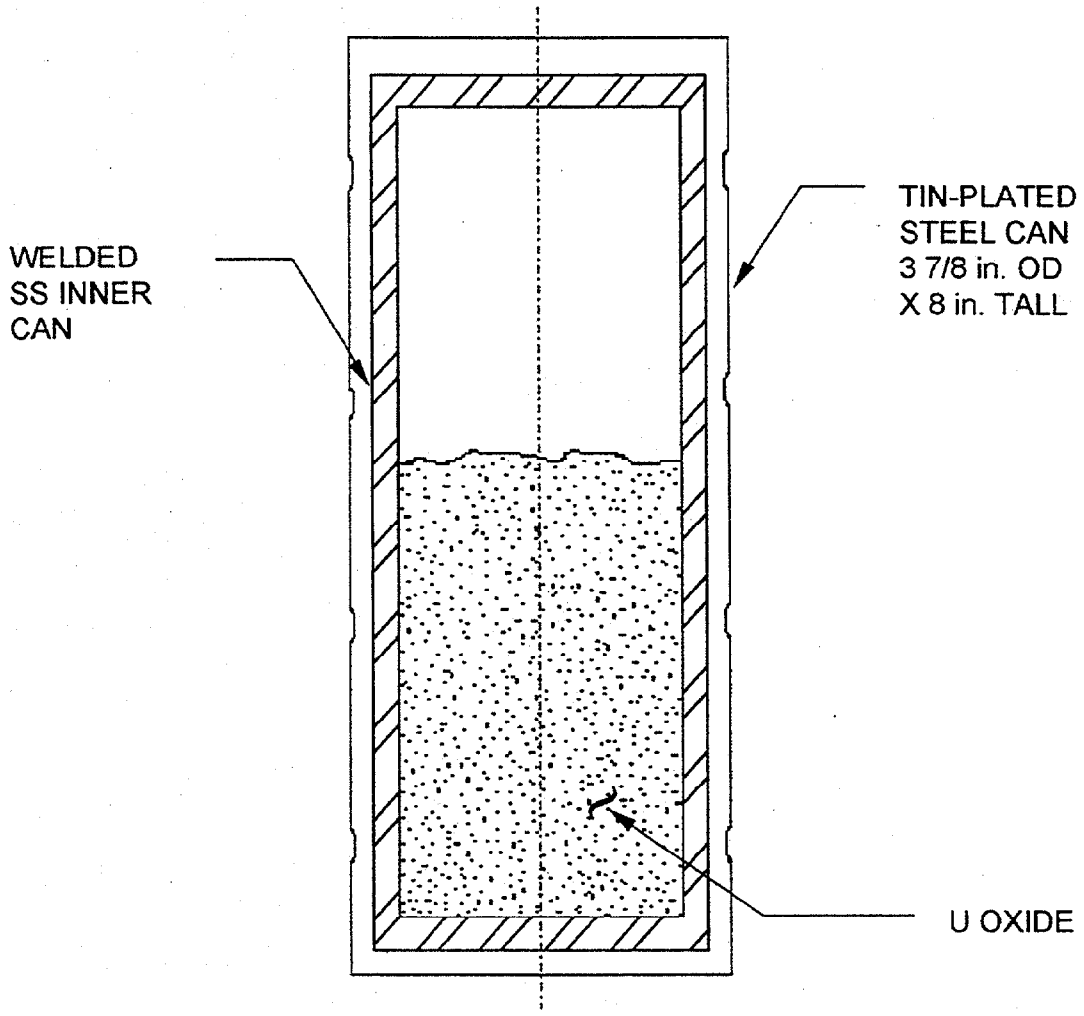

Fig. A.45. LZB-18 package assembly

APPLIES TO ONE OUTER PACKAGE CONTAINING 0.02 kg ^{233}U.
THIS REPRESENTS THE PRESUMED CONFIGURATION.
DETAILS OF ACTUAL ASSEMBLY NOT AVAILABLE.
(ALL DIMENSIONS ARE NOMINAL AND INFERRED FROM DESCRIPTIONS)

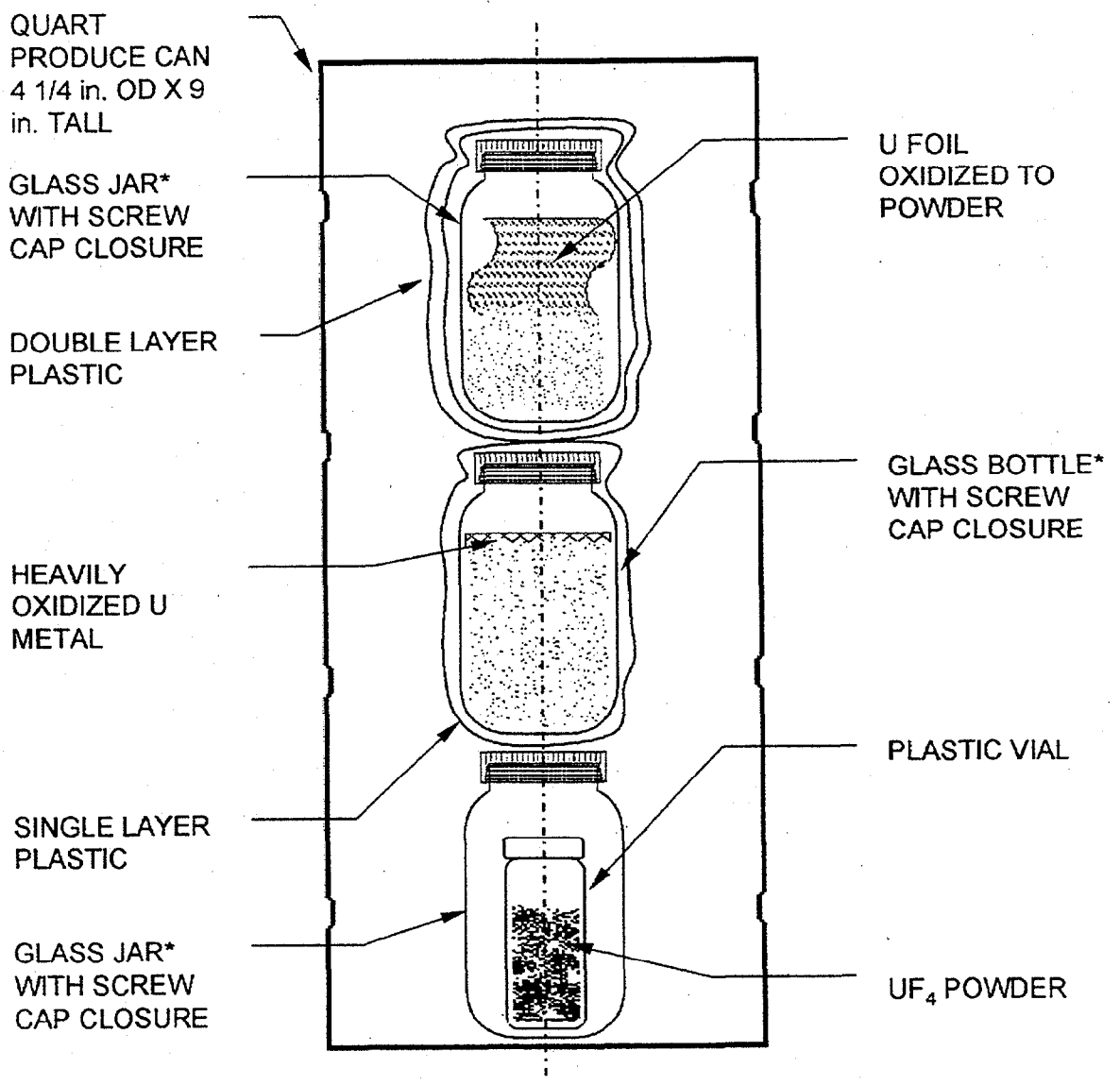

Fig. A.47 CZD-G (CY) package assembly

* INVENTORY INFORMATION SUMMARY SPECIFIES JARS FOR C/L #1 & #2, BOTTLE FOR C/L #3; THEREFORE, A DIFFERENCE IN DIMENSIONS AND/OR APPEARANCE MAY BE ASSUMED.

INTERNAL DISTRIBUTION

1. C. W. Alexander
2. J. M. Begovich
3. B. B. Bevard
4. L. F. Blankner
5. J. M. Butler
6. H. E. Clark
7. E. D. Collins
8. S. O. Cox
9. A. G. Croff
10. M. D. DeHart
11. W. D. Duerksen
12. K. R. Elam
13. C. W. Forsberg
14. R. G. Gilliland
15. L. L. Gilpin
16. N. M. Greene
17. S. R. Greene
18. M. J. Haire
19. S. A. Hodge
20. R. F. Holdaway
21. C. M. Hopper
22. M. J. Kass
23. D. C. Kocher
24. M. W. Kohring

25-44. A. M. Krichinsky

45. M. A. Kuliasha
46. A. J. Lucero
47. S. B. Ludwig
48. M. McBride
49. L. E. McNeese
50. G. E. Michaels
51. J. F. Mincey
52. H. J. Monroe
53. D. L. Moses
54. D. E. Mueller
55. D. G. O'Conner
56. C. V. Parks
57. B. D. Patton
58. L. M. Petrie
59. B. A. Powers
60. R. T. Primm, III

61-65. D. W. Ramey

66. D. A. Reed
67. D. E. Reichle
68. K. D. Rowley

69-73. J. E. Rushton

74-78. A. R. Sadlowe

79. B. W. Starnes
80. S. N. Storch
81. N. R. Sweat
82. G. D. West
83. R. M. Westfall
84. K. A. Williams
85. B. A. Worley
86. R. Q. Wright
87. Central Research Library
88. Laboratory Records—RC
89. Document Reference Section

EXTERNAL DISTRIBUTION

90. Al Alm, U.S. Department of Energy, Assistant Secretary, Environmental Management, 1000 Independence Ave., S.W., Washington, D.C. 20585.

91. Joe Arango, U.S. Department of Energy, S-3.1, Rm. 6H-025, 1000 Independence Ave., S.W., Washington, D.C. 20585.

112. A. I. Cygelman, U.S. Department of Energy, Office of Fissile Materials Disposition, DOE/MD-3, Forrestal Bldg., Rm. 6G-050, 1000 Independence Ave., S.W., Washington, D.C. 20585.

113. Bill Danker, U.S. Department of Energy, DOE/MD-3, Forrestal Bldg., Rm. 6G-050, 1000 Independence Ave., S.W., Washington, D.C. 20585.

114. Tom Doering, Framatome Cogema Fuels, 1180 Town Center Dr., Las Vegas, Nevada 89134.

115. John Duane, Westinghouse Savannah River Company, Savannah River Site, Bldg. 704-F, Aiken, South Carolina 29808.

116. C. Dunford, Brookhaven National Laboratory, National Nuclear Data Center, Bldg. 197D, Upton, NY 11973.

117. Randy Erickson, Los Alamos National Laboratory, MS-F660, P.O. Box 1663, Los Alamos, New Mexico 87545.

118. John Evans, U.S. Department of Energy, 1000 Independence Ave., S.W., Washington, D.C. 20585.

119. Rowland Felt, 780 DOE Place, Idaho Falls, Idaho 83415-1216.

120. Michael L. Gates, U.S. Department of Energy, Project Planning and Integration, Nuclear Materials Stewardship Project Office, Albuquerque Operations Office, P.O. Box 5400, Albuquerque, New Mexico 87185-5400.

121. Rose Gottemoller, U.S. Department of Energy, Office of Nonproliferation and National Security, 1000 Independence Ave., S.W., Washington, D.C. 20585.

122. Peter Gottlieb, TESS, 1180 Town Center Dr., Las Vegas, Nevada 89134.

123. Thomas Gould, Lawrence Livermore National Laboratory, MS-L186, P.O. Box 808, Livermore, California 94551.

124. Leonard W. Gray, Lawrence Livermore National Laboratory, MS-L394, P.O. Box 808, Livermore, California 94551.

125. M. Haas, U.S. Department of Energy, Rocky Flats Environmental Technology Site, P.O. Box 464, Golden, Colorado 80402.

126. James C. Hall, U.S. Department of Energy, Oak Ridge Operations Office, 20 Administration Rd., Oak Ridge, Tennessee 37831.

127-129. Reginald Hall, Advanced Integrated Management Service, 702 S. Illinois Avenue, Suite B-203, Oak Ridge, Tennessee 37830.

130. Bill Halsey, Lawrence Livermore National Laboratory, MS-L369, P.O. Box 808, Livermore, California 94551.

148. Kathy Martin, U.S. Department of Energy, DOE/GC-52, 1000 Independence Ave., S.W., Washington, D.C. 20585.

149. Herbert Massie, U.S. Defense Nuclear Facilities Safety Board, Suite 700, 625 Indiana Ave., N.W., Washington, D.C. 20004.

150. Mal McKibben, Westinghouse Savannah River Company, Savannah River Site, Bldg. 773-41A, Rm. 123, Aiken, South Carolina 29808.

151. T. McLaughlin, Los Alamos National Laboratory, ESH-6, P.O. Box 1663, Los Alamos, New Mexico 87545.

152. Don McWhorter, Westinghouse Savannah River Company, Savannah River Site, Bldg. 704-F, Aiken, South Carolina 29808.

153. Dave Michlewicz, U.S. Department of Energy, DOE/ER-7, 1000 Independence Ave., S.W., Washington, D.C. 20585.

154. Lawrence E. Miller, U.S. Department of Energy, DOE/NE-40, 19901 Germantown Rd., Germantown, Maryland 20874.

155. Ed Moore, Westinghouse Savannah River Company, Savannah River Site, Bldg. 773-41A, Rm. 125, P.O. Box 616, Aiken, South Carolina 29808.

156. Jim Nail, Lockheed Martin Idaho Technologies Company, P.O. Box 1625, Idaho Falls, Idaho 83415.

157. Dave Neiswander, Advanced Integrated Management Services, Inc., 702 S. Illinois Avenue, Suite B-203, Oak Ridge, Tennessee 37830.

158. Jon Nielsen, Los Alamos National Laboratory, P.O. Box 1663, Los Alamos, New Mexico 87545.

159. David Nulton, U.S. Department of Energy, Director, 1000 Independence Ave., S.W., Washington, D.C. 20585

160. H. B. Peacock, Westinghouse Savannah River Company, Savannah River Site, Bldg. 773-A, Aiken, South Carolina 29808.

161. Lee Peddicord, Texas A&M University, Strategic Programs, 120 Zachry, College Station, Texas 77843-3133.

162. David Peeler, Westinghouse Savannah River Company, Savannah River Site, Bldg. 773-43A, Aiken, South Carolina 29808.

163. Per F. Peterson, University of California–Berkeley, Department of Nuclear Engineering, Berkeley, California 94720-1730.

164. Tish Price, U.S. Department of Energy, Rm. 700N, 1301 Clay St., Oakland, California 94612.

182. Jeff Williams, Idaho National Engineering and Environmental Laboratory, P.O. Box 1625, Idaho Falls, Idaho 83415.

183. M. Williams, Louisiana State University, Nuclear Science Center, Baton Rouge, Louisiana 70803.

184. Wendell L. Williams, U.S. Department of Energy, MD-3, Forrestal Bldg., 6G-071, 1000 Independence Ave., S.W., Washington, D.C. 20585.

185. C. R. Wolfe, Westinghouse Savannah River Company, Savannah River Site, Bldg. 773-A, Aiken, South Carolina 29808.

186. Jesse L. Yow, Jr., Lawrence Livermore National Laboratory, University of California, 7000 East Ave., Livermore, California 94550.

187-191. Loong Yong, Advanced Integrated Management Service, 702 S. Illinois Avenue, Suite B-203, Oak Ridge, Tennessee 37830.

192. Office of Assistant Manager of Energy Research and Development, P.O. Box 2008, DOE-ORO, Oak Ridge, Tennessee 37831-6269.

193-194. Office of Scientific and Technical Information, P.O. Box 62, Oak Ridge, Tennessee 37831.