Development of each new radioactive beam species is essentially a research project. Proposed target materials must be tested at high temperature to determine if they sinter or decompose and they must be tested in an ion source to determine if their vapor pressure is too high or if they will destroy the source. Chemically reactive radioactive beams may require a "carrier" to transport them out of the source. Depending on the species, a different ion source may be required. Some species do well with a positive-ion source and subsequent charge exchange. The group VII elements, however, do not charge exchange with sufficient efficiency so they may require a negative surface ionization source. Ion sources and targets are initially developed and tested off-line at one of two ion source test facilities. After a promising system has been developed, on-line tests are done at the UNISOR facility using low-intensity proton and deuteron beams from the tandem accelerator to study release times, ionization efficiencies, and target/ion source operating parameters. The UNISOR facility is set up to have the same configuration as the RIB platform so that ion sources may be tested at UNISOR and then moved to the RIB platform without modification. After UNISOR tests, promising target/ion source systems are installed on the RIB platform for high intensity testing with beams from ORIC. Bombardment with high intensity beams subjects the target to high temperatures and radiation fields and establishes the operational limits for the target/ion source system.[1]

Post acceleration of RIBs is accomplished with the tandem accelerator, which is a model 25 URC accelerator built to ORNL specifications by the National Electrostatics Corporation (NEC). The high-voltage generator, located inside a 100-ft-high, 33-ft-diameter pressure vessel, was built in a folded configuration with both low- and high-energy acceleration tubes contained within the same column structure. Reversal of ion direction in the high-voltage terminal is provided by a 180-degree magnet, which also serves to prevent ions of unwanted charge state from being introduced into the high-energy acceleration tube. The insulating gas used for the tandem is pure $SF_6$. Typical operating pressure is between 65 and 80 psig. A schematic is shown in Figure 5. Site preparation for the tandem accelerator was begun in August 1975 and the first successful transmission of beam through the entire system was accomplished in May 1980. The tandem has been in routine operation since July 1982, providing more than 75 beam species for atomic, nuclear, and astrophysics research. After installation of compressed geometry tubes, a terminal potential of 25.5 MV, the highest in the world, was achieved while accelerating a $^{58}$Ni beam.

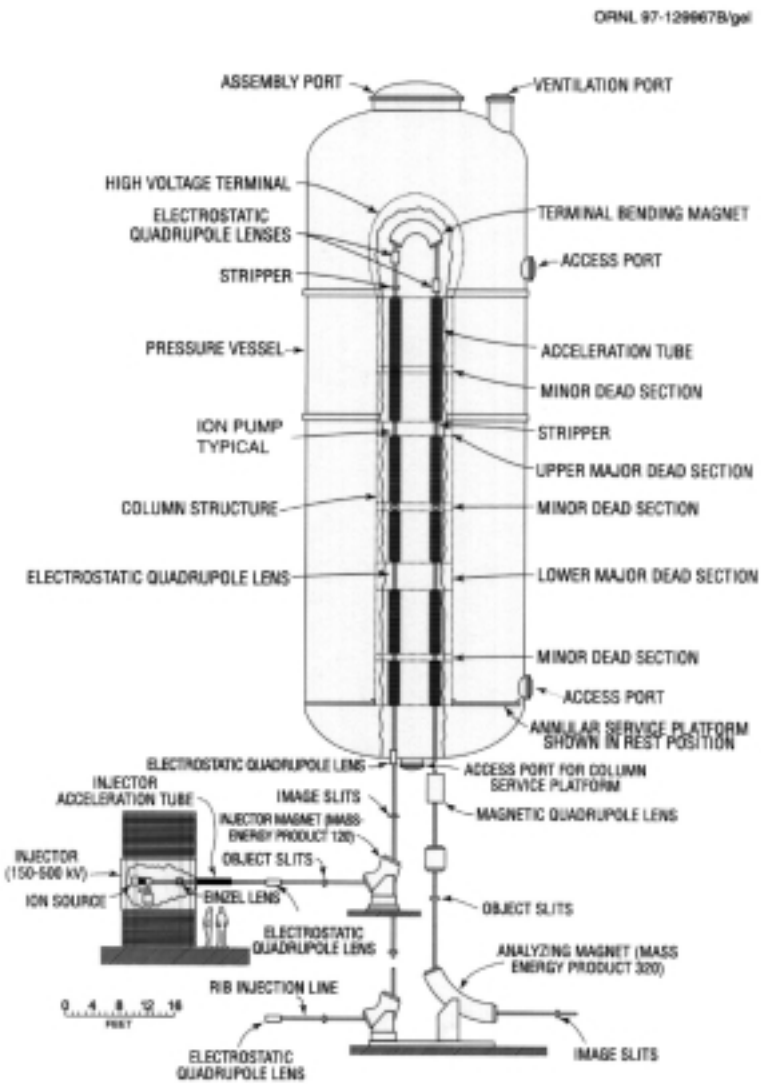


Figure 5. A simplified schematic drawing of the HRIBF tandem accelerator.

the first-stage mass analyzing magnet, a charge-exchange cell, and various optic and diagnostic equipment. Target-ion sources may be changed depending on what techniques are optimum for each radioactive species and both negative- and positive-ion sources have been used. A remote handling system, which includes a purchased robotic arm, allows removal of a used, activated source to an area where it may remain until such a time that it may be disassembled or scrapped. The RIB injector consists of two high-voltage platforms that are connected by conduits through a shielding wall. One platform houses the target-ion source assembly and the other contains the electronics components that must be shielded from the high levels associated with target bombardment. An isobar separation magnet is included in the beam line to the tandem accelerator. Figure 4 shows the layout for the complete facility.

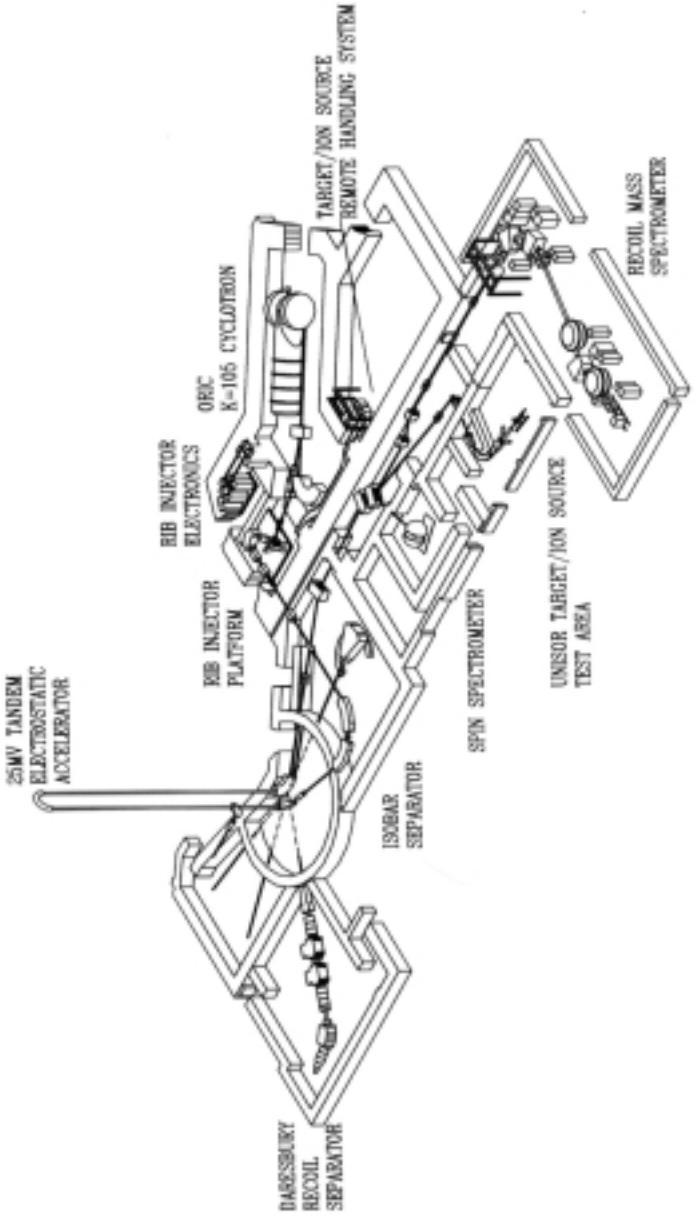


Figure 4. First floor layout of the ORNL Holifield Radioactive Ion Beam Facility.

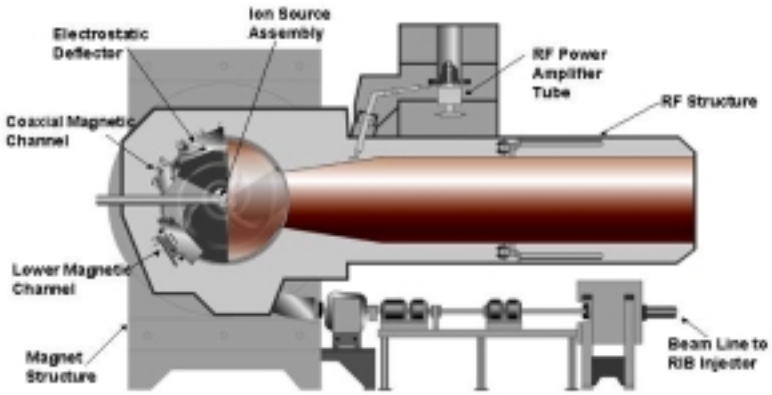


Figure 2. A simplified schematic of the ORIC.

New construction for the RIB project consisted of a RIB injector mounted on a high-voltage platform, a new beam line from ORIC to the RIB injector, and a new beam line from the RIB injector to the tandem accelerator for post acceleration of RIBs. Figure 3 shows the high-voltage platform that contains the target-ion source,

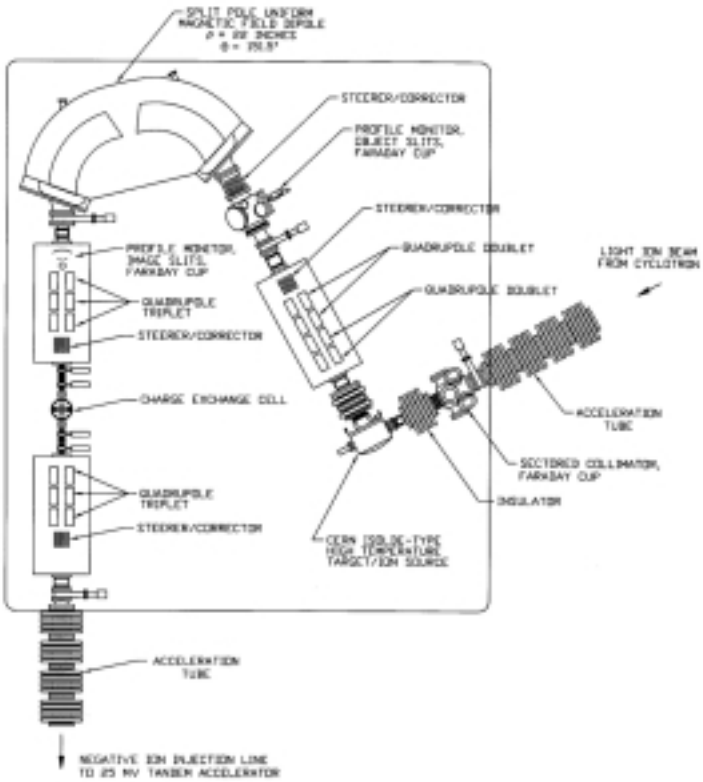


Figure 3. The radioactive ion beam injector.

# THE HOLIFIELD RADIOACTIVE ION BEAM FACILITY*

*M. J. Meigs*
*Oak Ridge National Laboratory*
*P. O. Box 2008, Oak Ridge, Tennessee 37831*

The Holifield Radioactive Ion Beam Facility (HRIBF) produces radioactive ion beams (RIBs) for basic nuclear physics research and serves as a development facility for the production of new RIBs. The HRIBF is a reconfiguration of the Holifield Heavy Ion Research Facility (HHIRF) with the addition of a new injector for the production of RIBs.

The Oak Ridge Isochronous Cyclotron (ORIC) is a k = 105, variable energy, multi-particle accelerator which was completed in 1962. ORIC was a light-ion accelerator until about 1967, when research emphasis changed from light to heavy ions. In 1981, ORIC was reconfigured to be a booster accelerator for the HHIRF and remained in this capacity until 1992 when the HHIRF was shut down to begin the radioactive ion beam project. ORIC was reconfigured as part of that project to again produce light ion beams. ORIC subsystems were upgraded to provide the species, energies, and intensities of light ion beams required for RIB production, and to increase machine reliability. ORIC's current mission is to serve as a driver for RIB production, by providing high-intensity proton, deuteron, and alpha particle beams to a target-ion source assembly located on the RIB injector platform. A picture of ORIC is given in Figure 1 while a schematic is given in Figure 2.

Figure 1. The Oak Ridge Isochronous Cyclotron.

*Oak Ridge National Laboratory, operated by UT-Battelle, LLC, for the U.S. Department of Energy under contract number DE-AC05-00OR22725.

1. Auble, R. L., H. K. Carter, J. W. Hale, J. Kormicki, Y. Liu, P. E. Mueller, C. A. Reed, D. W. Stracener, R. F. Welton (1999, ORNL-6957). Overview of the HRIBF Rib Development Program. *ORNL Physics Division, Progress Report, for the period ending September 30, 1998. http://www.phy.ornl.gov/progress/* (4 Oct. 2000).