ornl

OAK RIDGE NATIONAL LABORATORY

LOCKHEED MARTIN

ORNL/TM-13138

RECEIVED
FEB 21 1996
OSTI

Withdrawal Assay Monitoring at U.S. Enrichment Facilities

D. E. Smith

MANAGED BY
LOCKHEED MARTIN ENERGY SYSTEMS, INC.
FOR THE UNITED STATES
DEPARTMENT OF ENERGY

UCN-13673 (36 6-95)

DISTRIBUTION OF THIS DOCUMENT IS UNLIMITED

This report has been reproduced directly from the best available copy.

Available to DOE and DOE contractors from the Office of Scientific and Technical Information, P.O. Box 62, Oak Ridge, TN 37831; prices available from (423) 576-8401, FTS 626-8401.

Available to the public from the National Technical Information Service, U.S. Department of Commerce, 5285 Port Royal Rd., Springfield, VA 22161.

This report was prepared as an account of work sponsored by an agency of the United States Government. Neither the United States Government nor any agency thereof, nor any of their employees, makes any warranty, express or implied, or assumes any legal liability or responsibility for the accuracy, completeness, or usefulness of any information, apparatus, product, or process disclosed, or represents that its use would not infringe privately owned rights. Reference herein to any specific commercial product, process, or service by trade name, trademark, manufacturer, or otherwise, does not necessarily constitute or imply its endorsement, recommendation, or favoring by the United States Government or any agency thereof. The views and opinions of authors expressed herein do not necessarily state or reflect those of the United States Government or any agency thereof.

ORNL/TM-13138

Instrumentation and Controls Division

WITHDRAWAL ASSAY MONITORING AT U.S. ENRICHMENT FACILITIES

D. E. Smith

Date Published—January 1996

Prepared by
OAK RIDGE NATIONAL LABORATORY
Oak Ridge, Tennessee 37831-6285
managed by
LOCKHEED MARTIN ENERGY RESEARCH CORP.
for the
U.S. DEPARTMENT OF ENERGY
under contract DE-AC05-96OR22464

MASTER

DISTRIBUTION OF THIS DOCUMENT IS UNLIMITED

CONTENTS

Page

FIGURES v

ABSTRACT vii

1. INTRODUCTION 1

2. FUNCTIONAL OVERVIEW 3

3. SYSTEM HARDWARE 4
   3.1 PERSONAL COMPUTER 4
   3.2 SERIAL COMMUNICATIONS 4
   3.3 COMMUNICATIONS MULTIPLEXING 5

4. SYSTEM SOFTWARE 7
   4.1 SYSTEM AND SUPPORT FILES 7
   4.2 MAIN PROGRAM 7

5. OPERATOR INTERFACE 8
   5.1 TITLE SCREEN 8
   5.2 STATUS CONTROL SCREEN 9
   5.3 MONITOR SCREEN 10
   5.4 CYLINDER PLOT SCREEN 12
   5.5 MASS SPECTROMETER SCREEN 13
   5.6 PARAMETER INPUTS 14

6. PRINTER OUTPUT 15

7. GENERAL OPERATING PROCEDURE 16
   7.1 EVALUATE THE MASS SPECTROMETER 16
   7.2 ENTER THE CYLINDER DATA 16
   7.3 PUT THE POSITION ON-LINE 17
   7.4 MONITOR THE POSITION 17
   7.5 TAKE THE POSITION OFF-LINE 17
   7.6 EMPTY THE POSITION 17
   7.7 MANUAL ENTRY 17

8. BIBLIOGRAPHY 19

APPENDIX 21
   INITIALIZATION DATA FILE FORMAT 23
   EXAMPLE OF AN INITIALIZATION DATA FILE 25
   PORTSMOUTH ASSAY PRINTER CONTROLLER PROTOCOL 26
   PADUCAH ASSAY PRINTER CONTROLLER PROTOCOL 28
   MASSTRON MODEL M-5000 SCALE 30

FAIRBANKS SCALES MODEL 90-166 31
FAIRBANKS SCALES MODEL 90-9201-1 32

FIGURES

Figure Page

3.1 Serial communication cabling....6

5.1 Title Screen....8

5.2 Status Control Screen....9

5.3 Monitor Screen....11

5.4 Cylinder Plot Screen....12

5.5 Mass Spec Screen....13

ABSTRACT

Personnel in the Instrumentation and Controls Division at Oak Ridge National Laboratory (ORNL) in association with the United States Enrichment Corporation (USEC) have recently developed a system for monitoring and tracking the assay of enriched uranium from the production facilities at the Portsmouth Gaseous Diffusion Plant (PORTS). This work was sponsored by the USEC and has involved the expansion and improvement of an existing system that was developed by ORNL. The system provides control room operators with real-time information on the withdrawal operations of uranium hexafluoride at the withdrawal stations at PORTS. This report describes the current assay monitor data acquisition and display system that has been developed and installed.

1. INTRODUCTION

The United States Enrichment Corporation (USEC) controls two uranium enrichment facilities that produce enriched uranium for both military and commercial use. The process requires both feed and withdrawal operations. The withdrawal process requires both product (enriched uranium) withdrawal stations and tails (depleted uranium) withdrawal stations. A previous prototype system, "X-330 Tails Cylinder Assay Monitor," was developed as a demonstration for the tails withdrawal station at the Portsmouth Gaseous Diffusion Plant (PORTS). The prototype system was done in response to potential problems with the original method for determining the hourly weighted assay averages that are used to calculate the final weighted assay of the cylinder. In the original method the ^{235}U assay of uranium hexaflouride withdrawn from PORTS cascade into tails cylinders is determined every 5 min by measurements from an in-line assay mass spectrometer. An average value for a 1-h period is then calculated by area control room personnel and assigned to the accumulated weight in the cylinder for the period. A potential problem with this method is that cylinder weight is not automatically recorded as often as the assay. The assay and withdrawal rate can both vary during the given period. This variation results in inaccuracies in the hourly weighted assays that are used to calculate the final weighted assay of the cylinder. Laboratory analysis is considered to be the most accurate method for determining the final cylinder assay; however, the cost and safety considerations of redundant cylinder handling limit the number of cylinders sampled to less than 10%.

An analysis of data from the PORTS liquid sampling program in 1990 indicated that a statistically significant bias, which could result in a potential cumulative effect on the calculated cascade ^{235}U inventory, existed in the ^{235}U assay assigned to the tails cylinders. The prototype system "X-330 Tails Cylinder Assay Monitor" was developed to improve and automate the process by tracking both mass spectrometer assay values and cylinder weights during the filling of tails cylinders. This system was a demonstration system that allowed the operator to monitor only the filling of one cylinder position at a time. The system was installed in area control room two (ACR-2) in X-330 in June 1991. The system was evaluated by PORTS Operations personnel over the next 2 years. As a result of the demonstration system, PORTS Operations personnel requested the development of new a system with increased capabilities and design requirements. The new system would be considered as a product cylinder assay monitor system that would be used at both the tails and the product withdrawal stations.

Development of a product cylinder assay monitor system was started in June 1993, and the system was installed in June 1994. The new system uses a single software package for all the withdrawal stations. The new system uses the concepts of the prototype demonstration system; however, the new system was redesigned to include many new requirements. The new requirements included

1. product withdrawal monitoring,
2. tracking and recording the total weight and assay fed into cylinders located on any of four possible scale positions,
3. simultaneous monitoring of two active scale positions,
4. operator selectability of one of three possible assay mass spectrometers to an active scale position,

5. a status control screen that shows status mode and relevant cylinder information for all four scale positions,
6. operator selectability of one of four different types of scales for each position,
7. manual entry of data during periods of mass spectrometer failure, and
8. allowing for negative flow rates from the cylinders.

An enhancement was made to the software in March 1995 that allows each withdrawal station to send data to a remote central monitoring system.

2. FUNCTIONAL OVERVIEW

The product assay monitor system monitors and records the total weight and assay of the UF_6 fed into cylinders for both tails and product withdrawal stations. Each withdrawal station requires one complete cylinder assay monitor system. The system operates without interfering with existing instrumentation or routine data analysis. The system can monitor up to three different mass spectrometers and interface to a total of four weigh-scale positions. The system allows for the simultaneous monitoring of two on-line positions. The operator selects the mass spectrometer and the scale position to be monitored before the cylinder is placed on-line. The system starts to monitor and display the withdrawal information for the selected position after the operator places the position on-line. The system requests a weight reading from the weigh scale each time an assay value is received (about every 5 min) from the mass spectrometer that is associated with an on-line position. The weight difference of the cylinder during the time period between two latest assay values is determined. The weight difference and the last assay value are then used to calculate the weight increase of the fissionable portion. This method helps to maintain the value of the continuous weighted assay of the cylinder contents.

The weight and average assay of material withdrawn from the cascade for each 30-min and 1-h interval are calculated and printed on a local printer. The system also prints each time a cylinder goes on-line or off-line. When a cylinder is removed from tracking, the final cylinder assay and weight are printed.

Although the system maintains status and cylinder content information for each of the four possible scales, only two cylinders at a time can be monitored as they fill. The four possible status modes for cylinders are defined as follows:

ON-LINE	-	for a cylinder currently being filled
STANDBY	-	for a cylinder waiting to go on-line or cooling and awaiting final weighing
EMPTY	-	for an empty position
DEAD	-	for no scale position or a position with a nonelectronic scale

The system allows two cylinders to be monitored on-line simultaneously. Any or all positions can be simultaneously in standby or empty. The system can monitor and track a negative fill rate; however, the system cannot handle a negative weight, so if a negative weight is encountered, it will lead to inaccurate data calculations.

Not all withdrawal station configurations use all four scale positions. The configurations that have no scale position or a position with a nonelectronic scale are identified as DEAD in the software parameter initialization file. Since a dead position cannot go on-line, cylinder information is not recorded or printed for these positions.

3. SYSTEM HARDWARE

3.1 PERSONAL COMPUTER

The assay monitor uses a standard 25-MHz 386-type personal computer (PC) with enhanced color graphics and 4 MB of memory. The PC is equipped with a standard RS-232 communication board that provides two communication (COM) ports, an Industrial Computer Source Model FASTCOM4W board that provides four RS-232 COM ports, and a standard printer parallel port.

3.2 SERIAL COMMUNICATIONS

The two standard COM ports are set up as COM1 (address 3f8 hex, IRQ4) and COM2 (address 2f8 hex, IRQ3). The four COM ports through the FASTCOM4W are set up as COM3, COM4, COM5, and COM6. The FASTCOM4W hardware configuration and SMART14 driver installation are set up as follows:

Fastcom Mode	YES
Base Address	280 hex
IRQ	5
UART FIFO	YES
Baud Swapping	NO
Handshaking	NO

The universal asynchronous receiver-transmitter first in first out (UART FIFO) buffer is 7500 B for the transmit buffer and 7500 B for the receive buffer for each of the four FASTCOM4W COM ports. The software for the assay monitor system requires that these buffers remain at 7500.

The software communication parameters for the assay printer controller line (COM1) are set without handshaking, programmable baud rate, no parity, eight data bits, and one stop bit. The protocols for the Portsmouth and Paducah assay printer controllers are described in the appendix. The software parameters for the Masstron M-5000 scale are set without handshaking, 1200 baud, no parity, eight data bits, and one stop bit. The parameters for the Fairbanks Scales Model 90-166 is set without handshaking, 2400 baud, no parity, seven data bits, and two stop bits. The parameters for the Fairbanks Scales Model 90-9201-1 is set without handshaking, 2400 baud, no parity, seven data bits, and two stop bits. The way in which the software polls the Masstron scale and the Fairbanks scales is described in the appendix. The software is configured to allow an operator to select a Winslow scale (Paducah). To date, a Winslow scale has not been interfaced to the assay monitor system. The software parameters and interface protocol for the Winslow scale will need to be adjusted and tested in the software when the Winslow scale is implemented into the assay monitor system.

The COM2 has three modes of operation that are determined by the COM2 Status value in the "init.dat" file. If COM2 is selected not to be opened, then the software will not open the COM2 serial line for communication. If COM2 is selected to be opened as a remote printer interface, then the software will send information to a serial printer that can be located remotely

such as in Portsmouth Building X300. If COM2 is selected to be opened as a remote computer interface, then the software will communicate with the software at a remote system (X300) to display the assay monitor information on the remote (X300) display. The software communication parameters for COM2 are set without handshaking, programmable baud rate, no parity, eight data bits, and one stop bit.

3.3 COMMUNICATIONS MULTIPLEXING

External to the PC a Black Box Corporation Model TDM-8 eight-line multiplexer (MUX) is used to multiplex the five COM lines from the area control room over a single RS-232 link to another Black Box MUX in the mass spectrometer room (see Fig. 3.1). Each COM line requires only three wires: transmit, receive, and ground. One of the five lines into the MUX in the mass spectrometer room is used to transmit the assay readings from the assay printer controller. The other four lines provide communication with up to four scales located in the withdrawal area. In the area control room the assay data line from the assay printer controller interfaces to the control room assay printer. The PC COM1 serial line also interfaces into the assay printer line to receive the mass spectrometer readings. The communication lines from the scales interface to the FASTCOM4W COM ports three, four, five, and six.

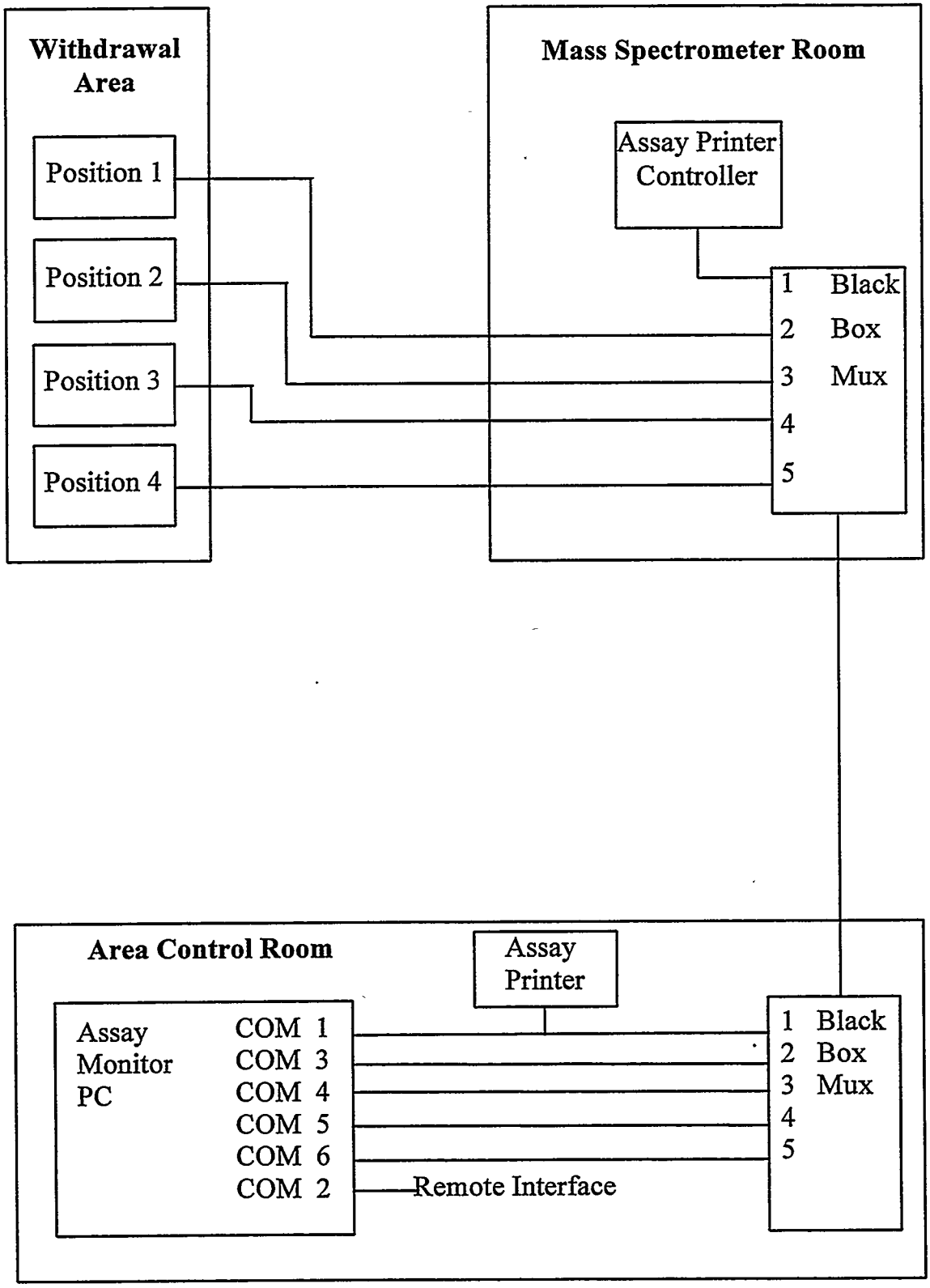

Fig. 3.1. Serial communication cabling.

4. SYSTEM SOFTWARE

The assay monitor PC operates under DOS 6.0. The assay monitor custom software is written in compiled C using Microsoft C Compiler version 6. Blaise Computing, Inc., "C Asynch Manager" routines are used to set up and control the COM1 and COM2 serial ports. The COM1 port interfaces to the assay printer line to acquire the assay readings. The COM2 port is used as a remote communication interface as described in Chap. 3. The COM3, COM4, COM5, and COM6 serial ports are controlled by the Microsoft C routines through the Industrial Computer Source SMART14 driver for the FASTCOM4W multiplexer board. The C source routines were compiled in the large memory model mode and then linked to form the executable file, "assay.exe."

4.1 SYSTEM AND SUPPORT FILES

The SMART14 driver for the FASTCOM4W was built according to the manufacturer's installation routine using the parameters listed in Sect. 3.2, Serial Communications. The SMART14 driver is loaded in the autoexec.bat file. A Blaise Computing, Inc., "C Asynch Manager" precompiled object module "asynch.obj" was linked with the compiled assay monitor C routines. The two "C Asynch Manager" include files "asynch_1.h" and "asynch_2.h," and the library "asy_mcl" are also required during the linking of the assay monitor C routines.

4.2 MAIN PROGRAM

Starting the assay monitor software from DOS requires more than just the "assay.exe" file. Prior to loading the main program, "smart14.exe" must be run to set up the FASTCOM4W driver. This driver setup is usually done from the "autoexec.bat" at the time the system is booted. When the "assay.exe" is loaded, it requires access to two other files that must be in the same directory. These files are the Microsoft font file "tmsrb.fon" and the initialization file "init.dat." The initialization file "init.dat" preloads parameter values for the main program. The format and an example for the initialization file are in the appendix.

5. OPERATOR INTERFACE

The system is designed to track the assay and weight of up to two on-line cylinders and to display the withdrawal operations information in real time to the control room operator. Several operator selectable displays are used to present both graphical and textual information. The operator must specify to the system when the tracking of a particular cylinder is to begin and end. Five main display screens are used to relate cylinder and scale position information to the operators.

5.1 TITLE SCREEN

The Title Screen (see Fig. 5.1) appears when the system software is initially loaded. From the Title Screen the operator can choose one of five options that are listed in the function key bar at the bottom of the screen.

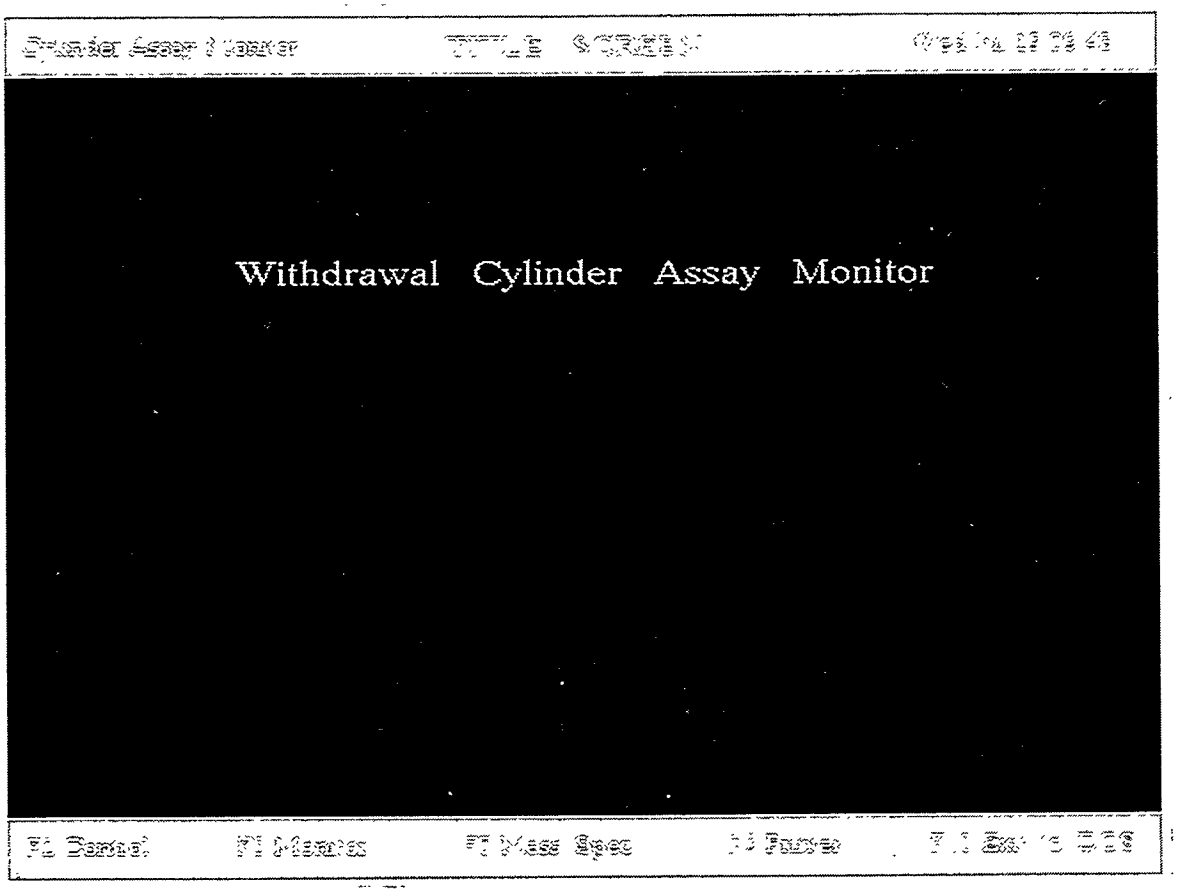

Fig. 5.1. Title Screen.

The following actions are taken when a function key at the bottom of the screen is pressed:

<F2> Control—transfers control to the Status Control Screen
<F3> Monitor—transfers control to the Monitor Screen
<F5> Mass Spec—transfers control to the Mass Spec screen
<F9> Printer—to turn the printer ON or OFF in the software
<F10> Exit to DOS—terminates the program and returns to DOS

The operator should turn off the printer in software if a printer does not exist or is not powered on.

5.2 STATUS CONTROL SCREEN

The Status Control Screen (see Fig. 5.2) displays position status and cylinder information for up to four scale positions. Position-specific information displayed includes (a) position status (i.e., DEAD, EMPTY, STANDBY, or ON-LINE), (b) cylinder ID, provided a cylinder is on the scale, (c) target weight, (d) current cylinder weight, (e) target assay, (f) current cylinder assay, and (g) the type of scale. From the Status Control Screen the operator can select the controlling position, enter new cylinder parameters, and edit existing data values. The edit functions are

	Position 1	Position 2	Position 3	Position 4
Status	ON-LINE	EMPTY	EMPTY	EMPTY
Cyl-ID.	216A528			
Targ_Wt.	10000 lbs	10000 lbs	10000 lbs	10000 lbs
Curr_Wt.	3257 lbs	0 lbs	0 lbs	0 lbs
Targ_As.	0.3870 %	0.3870 %	0.3870 %	0.3870 %
Curr_As.	0.3875 %	0.0000 %	0.0000 %	0.0000 %
Scale	Masstron	Fair 166	Fair 9201	Masstron

Left / Right Arrow Selects Position

Fig 5.2. Status Control Screen.

accessed via the <F6> Setup key. The bottom part of the screen is used for operator interaction when a cylinder position is being emptied via the <F9> Empty key. The following actions are taken when a function key at the bottom of the screen is pressed:

<F1> Title—transfers control to the Title Screen
<F3> Monitor—transfers control to the Monitor Screen
<F4> Cyl.Plot—transfers control to the Cylinder Plot Screen
<F6> Setup—enters the setup editing mode
<F7> Put On-Line—puts a position ON-LINE
<F8> Take Off-Line—takes a position OFF-LINE
<F9> Empty—empties a position

5.3 MONITOR SCREEN

The Monitor Screen (see Fig. 5.3) is the primary display that is used to keep control room operators informed on the current withdrawal operation. The center of the top portion of the screen either indicates the on-line position or is blank if a position is not on-line. A strip-chart type plot of the withdrawal assay over the past 2 h occupies most of the center of the display. This plot is displayed and kept updated on this screen only during an active on-line cylinder fill operation. The "Mass Spec:" above the strip chart indicates the mass spectrometer (MS) assigned to the position. The color of the strip chart is normally red, indicating a positive fill rate. The color of the strip chart is yellow in the case of product being withdrawn from a cylinder, indicating a negative fill rate. In the case of a negative fill rate, the last value of the weighted assay before the fill rate started going negative is used in the data calculations.

Several other measured and calculated values are also displayed when a position is on-line. To the left side of the display is a fill level indicator, which shows the percent of the target weight already filled. The color of the fill level indicator is normally blue, indicating a positive fill rate. A yellow color for the fill level indicates a negative fill rate. To the right of the strip chart is a numerical assay range scale with the target value shown in red. To the right of the assay range scale are two pointers. The blue pointer indicates the current assay of the cylinder. A numerical value is also displayed in blue above the assay range scale. The green pointer indicates the needed assay to achieve the target assay for the target weight of the full cylinder. A numerical value is also displayed in green at the top of the range scale. A numerical value for the predicted assay is displayed in yellow below the assay range. The predicated assay value indicates the assay value of the target weight of the full cylinder, assuming that the feed will remain at the last assay read by the MS.

There are seven data boxes on the right side of the display. The "Cylinder No." is the label assigned to the cylinder during the setup procedure as well as the "Target Wt." The "Current Wt." is updated when the assay value is received by the system. The "Fill Rate" is calculated based on the time interval between readings every time an assay and weight measurement are obtained, starting after the second reading. The "Until Fill" projects the time remaining to fill the cylinder based on the current fill rate and target weight. The "MS Bias" shows the current correction factor, if any, added to all the readings from the assigned mass spectrometer. The "MS Tolerance" is the tolerance or allowed deviation from the last reading. If a new assay reading exceeds the MS Tolerance value, the Out-of-Tolerance Screen is displayed. This screen lets the operator enter a corrected value or tell the system not to use the value. The operator has 2 min to respond to the Out-of-Tolerance Screen, at which time the system will discard the value and

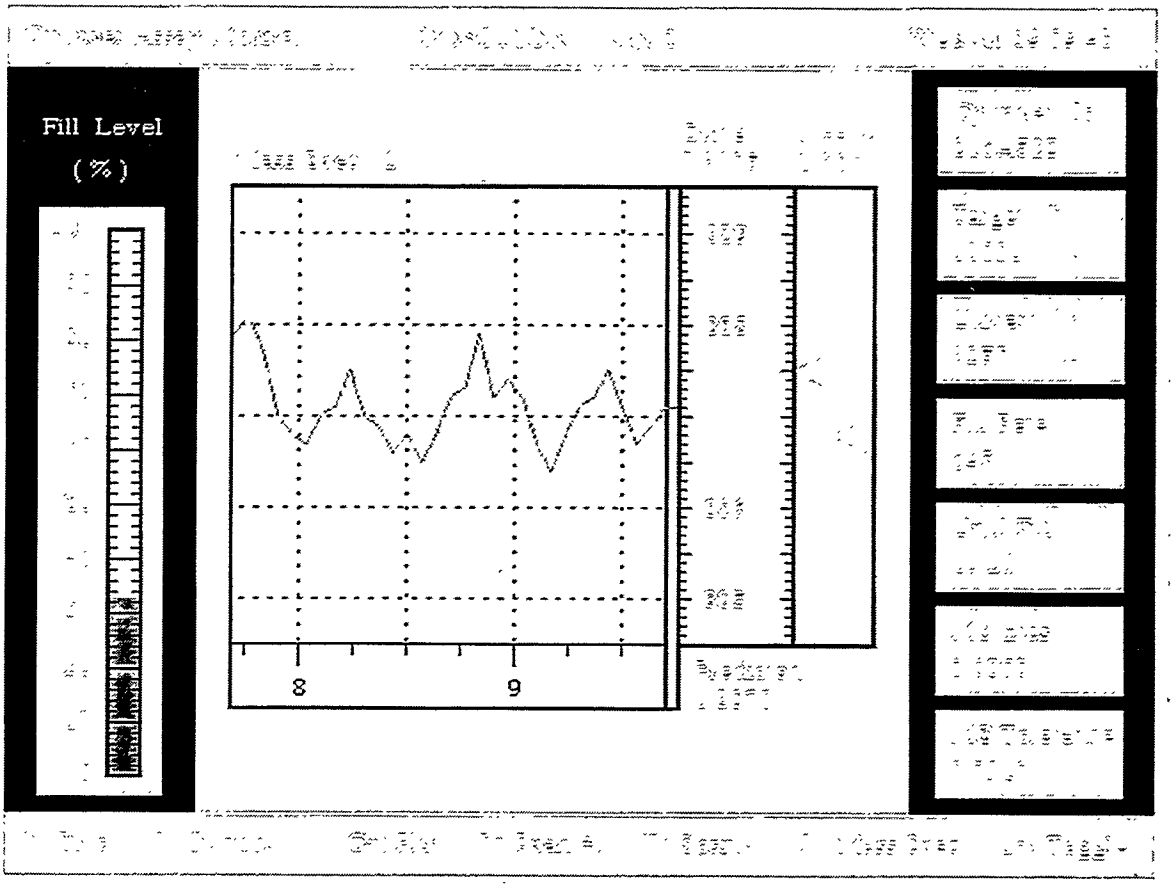

Fig. 5.3. Monitor Screen.

return to the previous screen. Any unacknowledged Out-of-Tolerance Screen will show up above the strip chart as "Tol. UnAck:" with the count.

A message is displayed above the strip chart if the system fails to communicate with the associated on-line scale. This message reads "Unable to read cylinder weight since" followed by the date and time of the failure.

The bottom portion of the Monitor Screen displays the operator function keys. The following actions are taken when a function key at the bottom of the screen is pressed:

<F1> Title—transfers control to the Title Screen
<F2> Control—transfers control to the Status Control Screen
<F4> Cyl.Plot—transfers control to the Cylinder Plot Screen
<F5> Span(+)—increases the scaling on the assay plot
<F6> Span(-)—decreases the scaling on the assay plot
<F7> Mass Spec—to change the MS, MS parameter, or to enter the manual entry mode
<F8> Manual Entry of Data—only present when position is in manual entry mode
<ESC> Toggle—transfers control to the Monitor Screen of a second ON-LINE position

When the <F7> Mass Spec as listed above is pressed, the following new set of function keys at the bottom of the screen appear in the place of the first set of keys:

<F1> Use #1—use MS #1
<F2> Use #2—use MS #2
<F3> Use #3—use MS #3
<F7> Bias—to change the MS bias
<F8> Tol.—to change the MS tolerance
<F9> Manual—use the manual mode instead of an MS
<Enter> Return—returns to the previous set of function keys

5.4 CYLINDER PLOT SCREEN

The Cylinder Plot Screen (see Fig. 5.4) is a plot of the weighted assay of the on-line cylinder vs weight. As the cylinder fills, the assay line in green progresses across the cylinder plot chart. The weight range on the horizontal axis is based on the target weight for the cylinder. The plot chart will display up to 100 data points. The resolution of each data point is 1% of the target weight. The assay range on the vertical axis is the same as on the assay plot on the Monitor Screen and can be temporarily increased or decreased with the function keys <F5> or

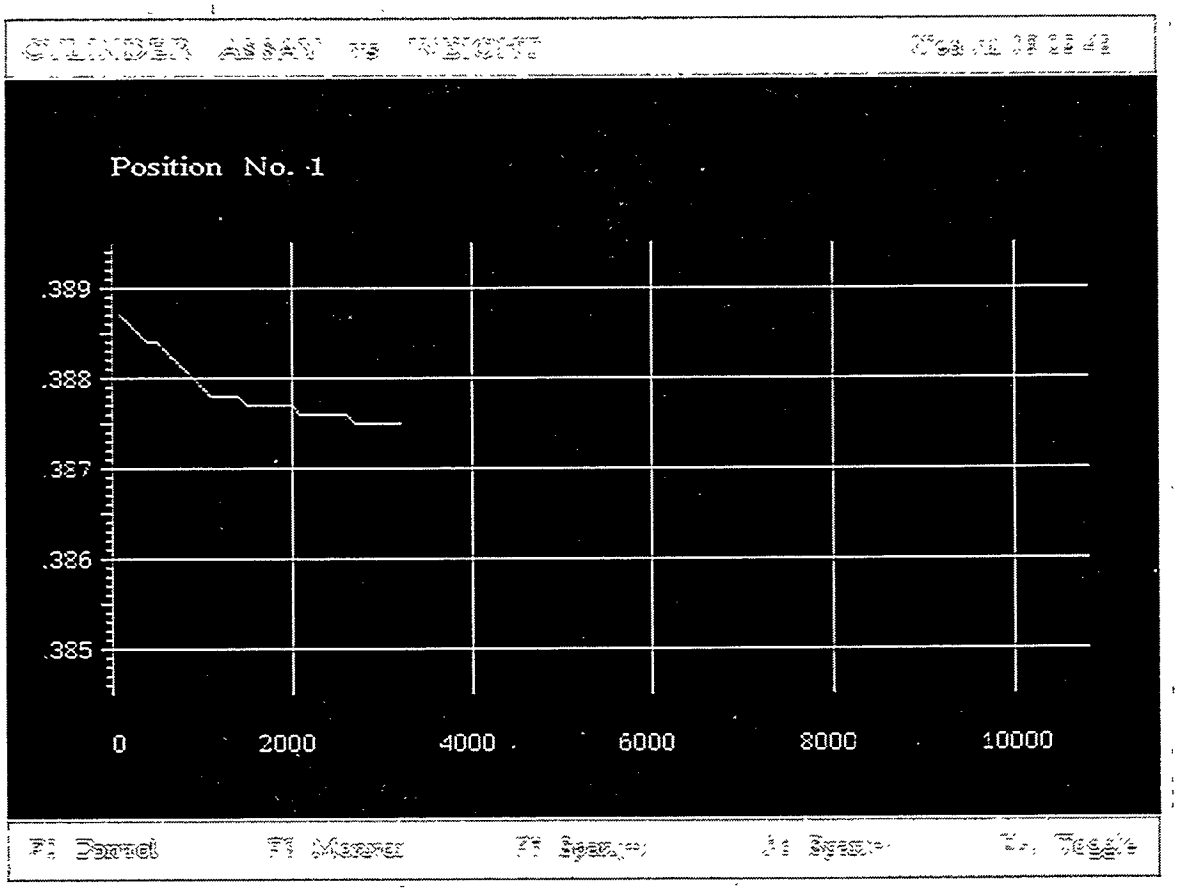

Fig. 5.4. Cylinder Plot Screen.

<F6>. The position number is shown above the vertical axis. The bottom portion of the Cylinder Plot Screen displays the operator function keys. The following actions are taken when a function key at the bottom of the screen is pressed:

<F2> Control—transfers control to the Status Control Screen
<F3> Monitor—transfers control to the Monitor Screen
<F5> Span(+)—increases the scaling on the plot
<F6> Span(-)—decreases the scaling on the plot
<ESC> Toggle—transfers control to the Cylinder Plot Screen of a second ON-LINE position

5.5 MASS SPECTROMETER SCREEN

The Mass Spec Screen (see Fig. 5.5) is used to monitor all the mass spectrometers. The Mass Spec Screen differs from the Monitor Screen in that the MS does not have to be associated with an on-line position. The Mass Spec Screen will enable the operator to view current data from the MS selected before putting that MS on-line. The strip-chart plot in the center of the display is similar to the Monitor Screen. If the assay value is off scale, the value will show at the top or bottom of the assay range scale depending on if the value is higher or lower than the range

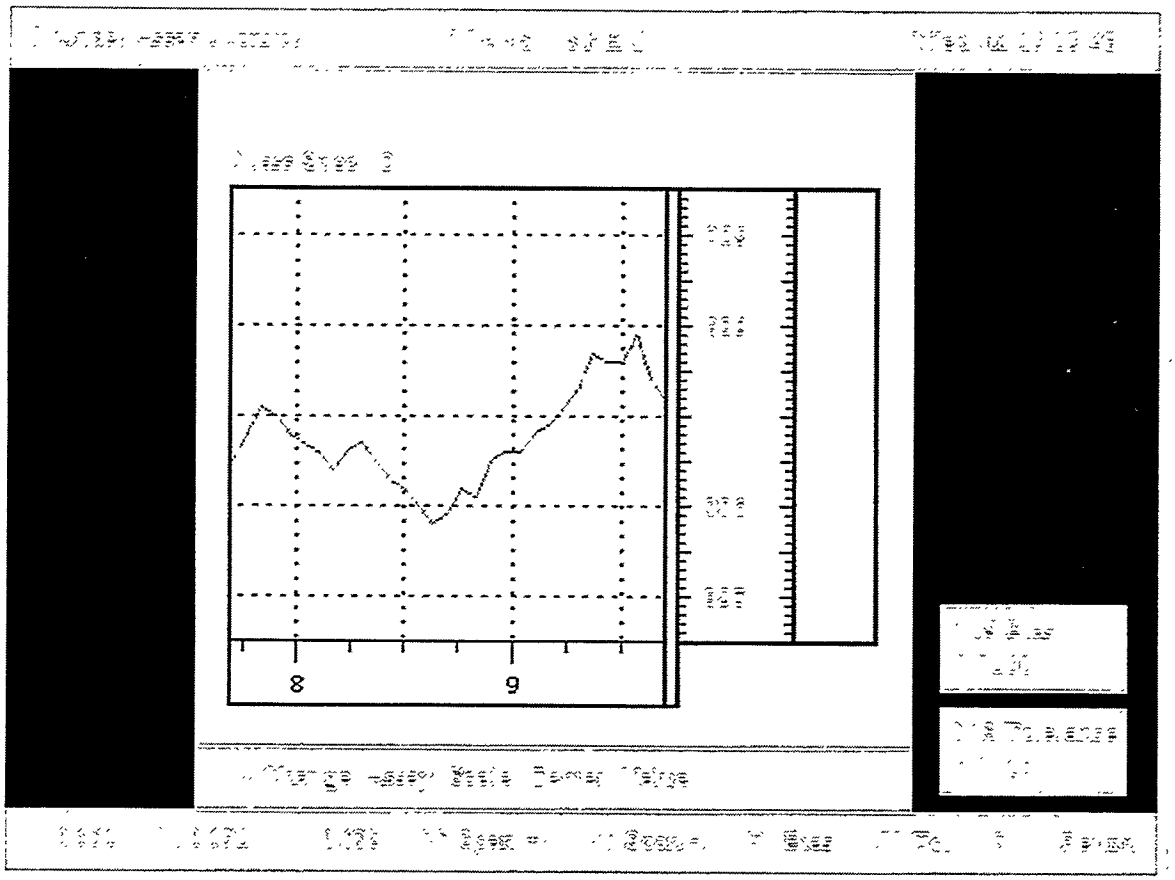

Fig. 5.5. Mass Spec Screen.

scale. The <F9> function key allows the operator to change the assay scale center value. The operator can change the MS Bias and MS Tolerance provided that the MS is not currently associated with an on-line position. An out-of-tolerance value for an MS not on-line does not cause the Out-of-Tolerance Screen to be activated. The out-of-tolerance value is accepted by the system and is plotted.

The bottom portion of the Mass Spec Screen displays the operator function keys. The following actions are taken when a function key at the bottom of the screen is pressed:

<F1> MS1—displays the data for MS #1
<F2> MS2—displays the data for MS #2
<F3> MS3—displays the data for MS #3
<F5> Span(+)—increases the scaling on the assay plot
<F6> Span(-)—decreases the scaling on the assay plot
<F7> Bias—to change an MS bias
<F8> Tol.—to change an MS tolerance
<F9> Change Assay Scale Center Value—to change the center value
<Enter> Return—transfers control to the Title Screen

5.6 PARAMETER INPUTS

The operator must enter a cylinder identification number during the setup of the cylinder on the Status Control Screen before the system will change the position status from EMPTY to STANDBY. The operator can also change other parameters, which otherwise default to values contained in the system parameter initialization file, "init.dat." The operator-input parameters that can be changed during the setup mode on the Status Control Screen include the cylinder target weight and assay, the initial cylinder weight and assay, and the type of scale. The operator-input parameters that can be changed from the Monitor Screen and Mass Spec Screen are the MS Bias and MS Tolerance.

6. PRINTER OUTPUT

A continuous feed printer connected to the PC port LPT1 is used to record certain statistical and event data. After a position is placed ON-LINE, the withdrawal weight and assay are calculated and printed for hourly and 30-min intervals. Every hour on the hour the previous hour's total withdrawal weight and assay are calculated and printed along with the time. Every 30 min on the hour and half-hour, the withdrawal weight and assay for the previous 30 min are calculated and printed. The following is a sample of the format for the hourly and 30 min printout (X represents up to 9 alphanumerics, Y is a numeric digit):

Jul 26 15:30 30 Min - Cyl.No. X, Assay YY.YYYY %, Weight YYYYY lbs

Jul 26 16:00 Hourly - Cyl.No. X, Assay YY.YYYY %, Weight YYYYY lbs

Jul 26 16:00 30 Min - Cyl.No. X, Assay YY.YYYY %, Weight YYYYY lbs

When a cylinder is put on-line or taken off-line, the event is printed as follows:

Jul 26 12:23 Position 1 ON-LINE - Cyl.No. X

Jul 26 22:03 Position 1 OFF-LINE

When the position is taken off-line and the operator empties the cylinder position, the event is printed as follows:

Jul 26 22:08 ***** Cylinder No. X Final *****
Net = YYYYY lbs Assay = YY.YYYY %
** Balance Beam Weights **
Gross = YYYYY Tare = YYYY Net = YYYYY

7. GENERAL OPERATING PROCEDURE

The monitoring system is operator controlled through the use of the display screens. The following is a general operating procedure for setting up a cylinder position, putting the position on-line, monitoring the position, taking the position off-line, and emptying the position.

7.1 EVALUATE THE MASS SPECTROMETER

The Mass Spec Screen can be used to evaluate an MS before the MS is assigned to monitor a position that is about to go on-line. On startup the software automatically begins looking for assay data from all the mass spectrometers. Choose the MS to be evaluated from the function keys at the bottom of the screen. If the assay is off the scale, a numerical value will appear at the top or bottom of the scale. For values off scale, use the <F9> key to enter the edit mode for entering a new center scale value. The MS bias and tolerance can also be set up for any MS, provided that the MS is not currently associated with an on-line position. The MS bias and tolerance for an MS that is associated with an on-line position are changed from the Monitor Screen.

7.2 ENTER THE CYLINDER DATA

The Status Control Screen is used to set up the parameters for the positions before the position is placed on-line. Using the left/right arrow keys, select the scale position. Note that positions labeled DEAD on the Status line cannot be used. Once the select box is located around the list for the desired position, press <F6> to enter "Setup," which is the position edit mode. A smaller box appears on the "Cyl_ID" line, and a brief list of edit keys, which are now active, appears in the lower half of the screen. Input the cylinder number and notice that the characters appear in the edit box as they are typed. Corrections can be made if necessary using the <Backspace> key. When the desired character string is shown in the box, press <Enter>, and the edit box will move down to the "Targ_Wt" line. Use the up/down arrow keys to select any parameters that need to be changed and input the new value in each case followed by the <Enter> key. Note that the <Enter> key must follow the input of any new data; otherwise, the new value will be discarded. In this edit mode an initial net weight and assay, as well as the target weight and assay, can be inputted if needed. When the scale box is selected, a new set of edit keys appears in the lower half of the screen along with a list of scale types. Use the up/down arrows to select the scale and use the <Enter> key to save the edit or the <Esc> key to abandon the edit. After all the desired changes are made for the selected position, press <F9> to keep and record the information just entered or press <ESC> to erase the new values and return to the original values. If a cylinder number was entered and recorded with <F9>, the position status will change to STANDBY.

7.3 PUT THE POSITION ON-LINE

Use the left/right arrow keys on the Status Control Screen to select a position whose status is STANDBY. Press <F7>, and the position status will change to ON-LINE and the Monitor Screen will be displayed with a message to enter the MS number or to enter the manual mode. Select the MS to be assigned to the position by pressing the function key associated with the MS or select the manual mode by using <F9>. The cylinder number, position number, date, and time will be recorded on the system printer along with the message "ON-LINE." The assay monitoring system will allow two positions to be on-line at the same time.

7.4 MONITOR THE POSITION

The Monitor Screen is used to monitor the weight and assay of the cylinder when a position is placed on-line. The system can monitor and track a negative fill rate, as explained in Sect. 5.3. The system cannot handle a negative weight which results from an error in offsetting the empty weight of the cylinder at the start. If a negative weight is encountered, it will lead to inaccurate data calculations. If two cylinders are on-line, the operator can quickly switch between the two cylinder positions by pressing the <Esc> Toggle key. Pressing the <F7> Mass Spec key allows the operator to change the MS bias, the MS tolerance, or the MS or to select the manual entry mode. The Cylinder Plot Screen is used to view a plot of the cylinder assay vs the cylinder weight for an on-line position.

7.5 TAKE THE POSITION OFF-LINE

When a cylinder is taken off-line at the withdrawal station, a control room operator must also inform the monitoring system by taking that position off-line. This is done by going to the Status Control Screen, selecting the position with the arrow keys, and pressing <F8>. The position status will then change from ON-LINE to STANDBY, and the action will be recorded by the printer.

7.6 EMPTY THE POSITION

When a full cylinder is ready to be removed from a scale, an operator must enter the final balance beam weight data for that cylinder and empty the position. Select the position on the Status Control Screen and press the <F9> Empty key. The operator will then be prompted for the final gross weight and the final tare weight. Once these data have been entered and accepted, the position status will change to EMPTY, and the cylinder assay and weights will be recorded on the printer.

7.7 MANUAL ENTRY

The Manual Entry option can be used when the mass spectrometer is not functioning correctly. In these cases the cylinder assay sample is taken to the laboratory for analysis. The

weight and time of the sample must be recorded at the time the sample is taken. The weight, time of the sample, and laboratory assay value can be inputted at the assay monitor from the Monitor Screen by using the <F8> Manual key. The operator will be prompted for the input values. The assay monitor will use the inputted values to generate the display screen data.

8. BIBLIOGRAPHY

Castleberry, K. N., *X-330 Tails Cylinder Assay Monitor*, K/ETO-72, Oak Ridge K-25 Site, 1991.

APPENDIX

INITIALIZATION DATA FILE FORMAT

The initialization data file "init.dat" preloads parameter values for the main program "assay.exe." The main program requires that a value be placed in each line. The "init.dat" file is an ASCII file that can be edited by an ASCII editor. The "init.dat" file for the ASSAY.EXE software version dated June 27, 1995, is as follows:

Line	Description	Value	Explanation
1	Plant ID	0	Portsmouth
		1	Paducah
2	Title Screen	0	Blank information area
3	Station	0	Paducah
		0	Portsmouth - Tails
		1	Portsmouth - ERP
		2	Portsmouth - LAW
4	COM1	2	300 baud
		3	600 baud
		4	1200 baud
		5	2400 baud
		6	4800 baud
		7	9600 baud
5	COM2 Status	0	Do not open COM2
		1	Open COM2 for a remote (X300) printer interface
		2	Open COM2 for a remote computer interface
6	COM2	2	300 baud
		3	600 baud
		4	1200 baud
		5	2400 baud
		6	4800 baud
		7	9600 baud

Lines 7 to 26 are values for setting up initial values for the four positions on the Status Control Screen. The software positions are numbered left to right on the Status Control Screen, such that

Software Position 1, n = 0
Software Position 2, n = 1
Software Position 3, n = 2
Software Position 4, n = 3

7 + 5n	Target Assay	xx.xxxx	Floating point notation
8 + 5n	Target Weight	yyyyy	Integer notation
9 + 5n	MS Tolerance	xx.xxxx	Floating point notation
10 + 5n	Status	0	Dead
		1	Empty
11 + 5n	Scale Type	1	Masstron

		2	Fairbanks 166
		3	Fairbanks 9201
		4	Winslow
27	MS #1 Bias	xx.xxxx	Floating point notation
28	MS #2 Bias	xx.xxxx	Floating point notation
29	MS #3 Bias	xx.xxxx	Floating point notation

Lines 30 to 32 are values for the Mass Spec Screen–Center point target values:

30	MS #1 Center	xx.xxxx	Floating point notation
31	MS #2 Center	xx.xxxx	Floating point notation
32	MS #3 Center	xx.xxxx	Floating point notation

EXAMPLE OF AN INITIALIZATION DATA FILE

An example of an initialization data file, "init.dat," is as follows:

```
0
0
0
7
2
6
.3870
10000
.0100
1
1
.3870
10000
.0100
1
1
.3870
10000
.0030
1
3
.3870
1000
.0030
1
1
.0000
.0000
.0000
.3870
.3870
.3870
```

PORTSMOUTH ASSAY PRINTER CONTROLLER PROTOCOL

The assay monitor system uses the COM1 port to interface to the assay controller. The assay monitor software requires a character string from the printer controller. The string includes the mass spectrometer number, the time stamp in 24-h format (hh:mm), and the assay value. Below is an explanation of each character in the string:

Assay values 0.0000 to 9.9999:

Character	Description	Value
1	Space	Decimal 32, ASCII (space)
2	Mass Spec #	ASCII 1–9
3	Space	Decimal 32, ASCII (space)
4	Hour	ASCII 0–2
5	Hour	ASCII 0–9
6	Colon	Decimal 58, ASCII (:)
7	Minute	ASCII 0–5
8	Minute	ASCII 0–9
9	Space	Decimal 32, ASCII (space)
10	Assay—ones	ASCII 0–9
11	Period	Decimal 46, ASCII (.)
12	Assay—tenths	ASCII 0–9
13	Assay—hundredths	ASCII 0–9
14	Assay—thousandths	ASCII 0–9
15	Assay—ten thousandths	ASCII 0–9
*	Carriage return	Decimal 13
*	Line feed	Decimal 10

* A carriage return line feed sequence terminates the string.

If the above string has an ASCII (H), decimal 72, in the string at location 18, 19, or 20, then the software interprets the string as an hourly average from the mass spectrometer printer controller. The assay value in this string is not used in the assay monitor calculations.

Assay values greater than 9.9999:

Character	Description	Value
1	Space	Decimal 32, ASCII (space)
2	Mass Spec #	ASCII 1–9
3	Space	Decimal 32, ASCII (space)
4	Hour	ASCII 0–2
5	Hour	ASCII 0–9
6	Colon	Decimal 58, ASCII (:)
7	Minute	ASCII 0–5

8	Minute	ASCII 0–9
9	Space	Decimal 32, ASCII (space)
10	Assay—tens	ASCII 0–9
11	Assay—ones	ASCII 0–9
12	Period	Decimal 46, ASCII (.)
13	Assay—tenths	ASCII 0–9
14	Assay—hundredths	ASCII 0–9
15	Assay—thousandths	ASCII 0–9
16	Assay—ten thousandths	ASCII 0–9
*	Carriage return	Decimal 13
*	Line feed	Decimal 10

* A carriage return line feed sequence terminates the string.

If the above string has an ASCII (H), decimal 72, in the string at location 18, 19, or 20, then the software interprets the string as an hourly average from the mass spectrometer printer controller. The assay value in this string is not used in the assay monitor calculations.

PADUCAH ASSAY PRINTER CONTROLLER PROTOCOL

The assay monitor system uses the COM1 port to interface to the assay controller. The assay monitor software requires an 18-character string from the controller. The string includes the mass spectrometer number, the time stamp in 24-h format (hh:mm), and the assay value. Below is an explanation of each of the 18 characters in the string:

Assay values 0.0000 to 9.9999:

Character	Description	Value
1	STX	Decimal 2
2	Mass Spec #	ASCII 1–9
3	Space	Decimal 32, ASCII (space)
4	Hour	ASCII 0–2
5	Hour	ASCII 0–9
6	Colon	Decimal 58, ASCII (:)
7	Minute	ASCII 0–5
8	Minute	ASCII 0–9
9	Space	Decimal 32, ASCII (space)
10	Assay—ones	ASCII 0–9
11	Period	Decimal 46, ASCII (.)
12	Assay—tenths	ASCII 0–9
13	Assay—hundredths	ASCII 0–9
14	Assay—thousandths	ASCII 0–9
15	Assay—ten thousandths	ASCII 0–9
16	Space	Decimal 32, ASCII (space)
17	Carriage return	Decimal 13
18	Line feed	Decimal 10

Assay values greater than 9.9999:

Character	Description	Value
1	STX	Decimal 2
2	Mass Spec #	ASCII 1–9
3	Space	Decimal 32, ASCII (space)
4	Hour	ASCII 0–2
5	Hour	ASCII 0–9
6	Colon	Decimal 58, ASCII (:)
7	Minute	ASCII 0–5
8	Minute	ASCII 0–9
9	Space	Decimal 32, ASCII (space)
10	Assay—tens	ASCII 0–9
11	Assay—ones	ASCII 0–9
12	Period	Decimal 46, ASCII (.)
13	Assay—tenths	ASCII 0–9
14	Assay—hundredths	ASCII 0–9

15	Assay—thousandths	ASCII 0–9
16	Assay—ten thousandths	ASCII 0–9
17	Carriage return ,	Decimal 13
18	Line feed	Decimal 10

MASSTRON MODEL M-5000 SCALE

The assay monitor software polls the Masstron M-5000 scale to request the current weight by sending a seven-character string to the scale with the following format:

Character	Description	Value
1	STX	Decimal 2
2	NUL	Decimal 0
3	W	ASCII (W), decimal 87
4	0	ASCII (0), decimal 48
5	ETB	Decimal 23
6	LRC	Decimal 114
7	CR	Decimal 13

The assay monitor software waits 2.5 s after sending the request to the scale. The software then processes the returned character string from the scale that was placed in the communication buffer. The software queries the character string in the buffer starting with the first received character. When the software finds an ACK, decimal 6, it ignores the next two characters, determines if the following characters are digits, and stores the digits until a nondigit character is encountered. The stored digits represent the returned weight from the scale.

FAIRBANKS SCALES MODEL 90-166

The assay monitor software polls the Fairbanks Scales Model 90-166 scale to request the current weight by sending an ASCII carriage return, decimal 13, to the scale. The assay monitor software waits 5 s after sending the request to the scale. The software then processes the returned character string from the scale that was placed in the communication buffer. The returned scale protocol consists of eight strings of information, with each of the first seven strings terminated by a line feed. The required net weight information is contained in the seventh string.

The software queries the character string in the communication buffer, starting with the first received character. The software starts to process the seventh scale string after finding the six line feeds that indicate the end of the sixth string from the scale. The first six characters of the seventh string contain the net weight data. As the software queries the seventh scale string, it determines if the characters are digits, starts storing the digits after the first digit is found, and continues to store the digits until a nondigit character is encountered. The stored digits represent the returned weight from the scale. Since the software ignores the sign character from the scale, the operator must assure that the scale does not start out with a negative weight value. The software requires that the scale be set up in the net tare mode, using pounds as the unit of weight.

FAIRBANKS SCALES MODEL 90-9201-1

The assay monitor software polls the Fairbanks Scales Model 90-9201-1 scale to request the current weight by sending an ASCII carriage return, decimal 13, to the scale. The assay monitor software waits 5 s after sending the request to the scale. The software then processes the returned character string from the scale that was placed in the communication buffer. The returned scale protocol consists of 11 strings of information, with each of the first 10 strings terminated by a line feed. The required net weight information is contained in the third string.

The software queries the character string in the communication buffer, starting with the thirty-second received character, which is the second character in the third scale string. The thirty-second character and the next five characters contain the net weight data. As the software queries the character string, it determines if the characters are digits, starts storing the digits after the first digit is found, and continues to store the digits until a nondigit character is encountered. The stored digits represent the returned weight from the scale. Since the software ignores the sign character from the scale, the operator must assure that the scale does not start out with a negative weight value. The software requires that the scale be set up in the net tare mode, using pounds as the unit of weight.

INTERNAL DISTRIBUTION

1–5. D. E. Smith
6. G. T. Alley
7. B. G. Eads
8. R. A. Hess
9. J. M. Jansen
10. D. W. McDonald
11. G. N. Miller
12. J. D. White
13. R. E. Uhrig
14. J. O. Stiegler
15. K. N. Castleberry
16. D. A. Clayton
17. J. A. Adkins
18. G. T. Cook
19. J. W. Deck
20. C. J. Deffenbaugh
21–22. J. R. Draher
23. J. M. Fitzgerald
24–25. D. A. Fosson
26. C. F. Harley
27. M. M. Hibdon
28–29. G. F. Jones, Jr.
30. W. Landrum
31. W. T. Price
32. C. J. Rhine
33. C. W. Sheward
34. K. D. Stratemeyer
35. D. L. Weishaar
36–37. D. L. Wilburn
38–43. K. J. Yarbrough
44–45. Central Research Library
46. Y-12 Technical Reference Section
47–48. Laboratory Records
49. Laboratory Records—Record Copy
50. ORNL Patent Section
51. I&C Division Publications Office

EXTERNAL DISTRIBUTION

52. L. Ewing, United States Enrichment Corporation, Two Democracy Center, 6903 Rockledge Drive, Bethesda, MD 20817
53. W. Jordan, United States Enrichment Corporation, Two Democracy Center, 6903 Rockledge Drive, Bethesda, MD 20817
54. Assistant Manager for Energy Research and Development, DOE-ORO, P.O. Box 2001, Oak Ridge, TN 37831-8600
55–56. Office of Scientific and Technical Information, U.S. Department of Energy, P.O. Box 62, Oak Ridge, TN 37831