ORNL/MD/LTR-176

MOX Fission Gas Pressure Measuring Apparatus

R.N. Morris
C.A. Baldwin
C.M. Malone

January 2000

Fissile Materials Disposition Program

Notice

This report was prepared as an account of work sponsored by an agency of the United States Government. Neither the United States Government nor any agency thereof, or any of their employees, makes any warranty, expressed or implied, or assumes any legal liability or responsibility for any third party's use or the results of such use, of any information, apparatus, product or process disclosed in this report, or represents that its use by such third party would not infringe privately owned rights.

Revision History

Revision number	Date Issued	Reason for revision
0	January 2000	First Issue

OAK RIDGE NATIONAL LABORATORY
MANAGED BY LOCKHEED MARTIN ENERGY RESEARCH CORPORATION
FOR THE U.S. DEPARTMENT OF ENERGY

BLDG. 3525, M/S 6295, ROOM 106
POST OFFICE BOX 2008
OAK RIDGE, TENNESSEE 37831-6295
TELEPHONE: 423-241-4237
FACSIMILE: 423-576-7862

January 2000

Distribution

MOX Fission Gas Pressure Measuring Apparatus

This report documents the Fission Gas Pressure Measurement Apparatus that was developed to perform the gas pressure measurements on the MOX ATR irradiation capsules. This effort was sponsored by the Fissile Materials Disposition Program (FMDP). The work was carried out at the Irradiated Fuels Examination Laboratory by the staff of the Metals and Ceramics Division of the Oak Ridge National Laboratory during the period from October 1998 through January 2000. Assistance for calibration and test procedures was provided by Engineering Technology Division staff.

This is a Level-2 document as defined in the Fissile Materials Disposition Program Light-Water Reactor Mixed-Oxide Fuel Irradiation Test Project Plan, ORNL/MD/LTR-78.

Sincerely,

Robert N. Morris
Fissile Materials Disposition Program

Enclosure

Distribution: See enclosure

ORNL/MD/LTR-176

MOX Fission Gas Pressure Measuring Apparatus

R.N. Morris
C.A. Baldwin
C.M. Malone

January 2000

Oak Ridge National Laboratory

CONTENTS

LIST OF FIGURES iv

LIST OF TABLES vi

ACRONYMS vii

ABSTRACT viii

1.0 INTRODUCTION 1
- 1.1 General 1
- 1.2 Task 1

2.0 REQUIREMENTS AND CONCEPTUAL DESIGN 4
- 2.1 Requirements 4
- 2.2 Conceptual Design 4

3.0 APPARATUS 7
- 3.1 Logistics 7
- 3.2 Preparation of the Capsule in the Main Hot Cell Bank 7
- 3.3 Assembly of the Fission Gas Apparatus in the CCCTF Hot Cell 10
- 3.4 FGPMA Operation 17
  - 3.4.1 Drilling 17
  - 3.4.2 Calibration 19
- 3.5 Pressure Calculations 22
- 3.6 Error Estimation 22

4.0 SUMMARY 25

5.0 ACKNOWLEDGMENTS 26

6.0 REFERENCES 27

APPENDIX A 28

APPENDIX B 32

DISTRIBUTION 33

FIGURES

Figure 1 Cut away view of the MOX capsule 2

Figure 2 Design of the mechanical portion of the Fission Gas Pressure Measuring Apparatus 6

Figure 3 Components used for mounting the MOX fuel pin in the fission gas apparatus: Mounting body (top center); lid & screws (center left); O-ring (middle right); Clamp & screws (middle bottom) 8

Figure 4 Clamp mounted on trimmed capsule 9

Figure 5 Close up of capsule and Clamp mounted in Mounting Body 9

Figure 6 Completed mounting body with capsule clamped in place and lid installed. The body can now be placed in a shielded carrier for transfer to the CCCTF hot cell. Note the groove at the mid section of the body; special clips grip this groove to support the body in the shielded carrier 10

Figure 7 The major sequence of operations in the assembly of the Fission Gas Pressure Measuring Apparatus once it is in the CCCTF hot cell 11

Figure 8 Major components to be used in the apparatus assembly: the Bellows Assembly (bottom left), the Mounting Clips and bolts (bottom center), the Centering Ring, (bottom right) the completed Mounting Body (right top), and the Mill Head (top center) 12

Figure 9 The mounting body held in place in the carrier by the mounting clips. A Centering ring is used to help with alignment. 13

Figure 10 Bellows Assembly mounted on the Mounting Body 14

Figure 11 Mill Head mounted on the carrier and attached to the Bellows Assembly 14

Figure 12 Completely assembled FGPMA in the CCCTF hot cell. Not shown is the Valve panel 15

Figure 13 The Valve Panel used to switch the FGPMA between calibration, evacuate, drilling, and sweeping 16

Figure 14 Schematic of Valve Panel showing the hook ups, pressure sensors, and valve arrangements. The mode shown isolated the FGPMA from the outside . . . 16

Figure 15 Valve arrangement for evacuating the FGPMA 18

Figure 16 Valve arrangement for sweeping the released gases into the cold traps 18

Figure 17 Valve arrangements to fill reference volume and evacuate FGPMA 19

Figure 18 Valve arrangement to release the reference volume into the FGPMA for calibration 20

Figure 19 Results of calibration checks on the FGPMA using the reference volume mounted on the valve panel and various fill pressures 21

TABLES

Table 1 Results of Simulator Testing 22

Table 2 Uncertainty Parameters 24

Table 3 Results of FGPMA Calibration Testing 29

Table 4 Apparatus Volumes 31

Table 5 Drawing Numbers 32

ACRONYMS

ATR	Advanced Test Reactor
CCCTF	Core Conduction Cooldown Test Facility
FGPMA	Fission Gas Pressure Measuring Apparatus
FMDP	Fissile Materials Disposition Program
INEEL	Idaho National Engineering and Environmental Laboratory
MOX	Mixed Oxide
ORNL	Oak Ridge National Laboratory
PIE	Post Irradiation Examination

ABSTRACT

This report summarizes the development of the apparatus designed to measure the fission gas pressure in the FMDP MOX ATR irradiation test capsules. The apparatus functions by using a vacuum sealed drill-press-like action to drill through the trimmed off top of the MOX capsule to sample the gas in the capsule plenum region and then to continue drilling into the contained fuel pin, stopping at each barrier to measure the gas pressure and sweep the released gases through a cold trap system to determine the ^{85}Kr quantity. The heart of the apparatus is a ferrofluidic seal which utilizes a novel magnetic fluid for rotary vacuum sealing and a stainless steel bellows for linear vacuum sealing. A standard miniature milling machine is used to power the drill bit. Initial testing with a small reference volume comparable in size to the fuel pin free volume and capsule simulators reveals good measurement accuracy and reproducibility.

1.0 INTRODUCTION

1.1 General

The Fissile Materials Disposition Program (FMDP) [Ref.1] is investigating the use of weapons derived plutonium in mixed oxide (MOX) fuel for use in light water reactors. The program has developed a set of simple uninstrumented, drop-in capsules for the irradiation of candidate MOX fuel and clad in the Advanced Test Reactor (ATR) at Idaho National Environmental and Engineering Laboratory (INEEL). One of the items of interest during post irradiation examination (PIE) is the fission gas release from the fuel and the program set a goal of developing an apparatus to measure the gas pressure in the fuel pins contained in the capsules. From these measurements, the fuel fission gas release fraction can be estimated.

1.2 Task

The design of the irradiation test capsule is shown in Fig.1; note that it is composed of two main components, the inner fuel pin and the outer stainless steel containment. The task involves two particular measurements. The first is the individual measurement of the gas pressures in both the capsule plenum region and the fuel pin. The second is the individual measurement of the ^{85}Kr inventories in both regions. ^{85}Kr is the only radioactive gas with a long enough half life to make quantitative measurements feasible and, for this task, its only source is from fission so it acts as an unmistakable marker for fuel gas release. Unless the fuel pin fails, the fission gases will accumulate only in the gas plenum at the top of the fuel pin surrounding the spring. The gas plenum region at the top of the capsule will contain only helium fill gas at just below atmospheric pressure.

The missions of the fission gas apparatus are to first drill into the capsule plenum region and measure the gas pressure and any ^{85}Kr inventory there to determine if any leakage has occurred from the fuel pin. Next, the apparatus is to drill into the fuel pin and measure the pressure and ^{85}Kr inventory there. This process is complicated by the fact that it must be done remotely in a hot cell environment, the gas must be captured, and this particular capsule design requires a preliminary step in cutting off a portion of the top of the capsule to avoid drilling through a considerable amount of rather difficult to machine irradiated stainless steel.

The apparatus design chosen involves drilling straight down through the remaining capsule top end cap and then through the fuel pin top end cap using a sealed bellows for vertical travel and a special magnetic vacuum seal for rotary motion. The released gases are captured in the evacuated bellows and the sub-atmospheric pressure measured. The actual pressures are back computed by using known volume ratios. Finally, a helium sweep gas is used to transfer the collected fission gases to a liquid nitrogen cooled charcoal trap system where the ^{85}Kr is collected and counted. The trap system is a specialized apparatus developed over several years under the High Temperature Gas-Cooled Reactor program solely for the

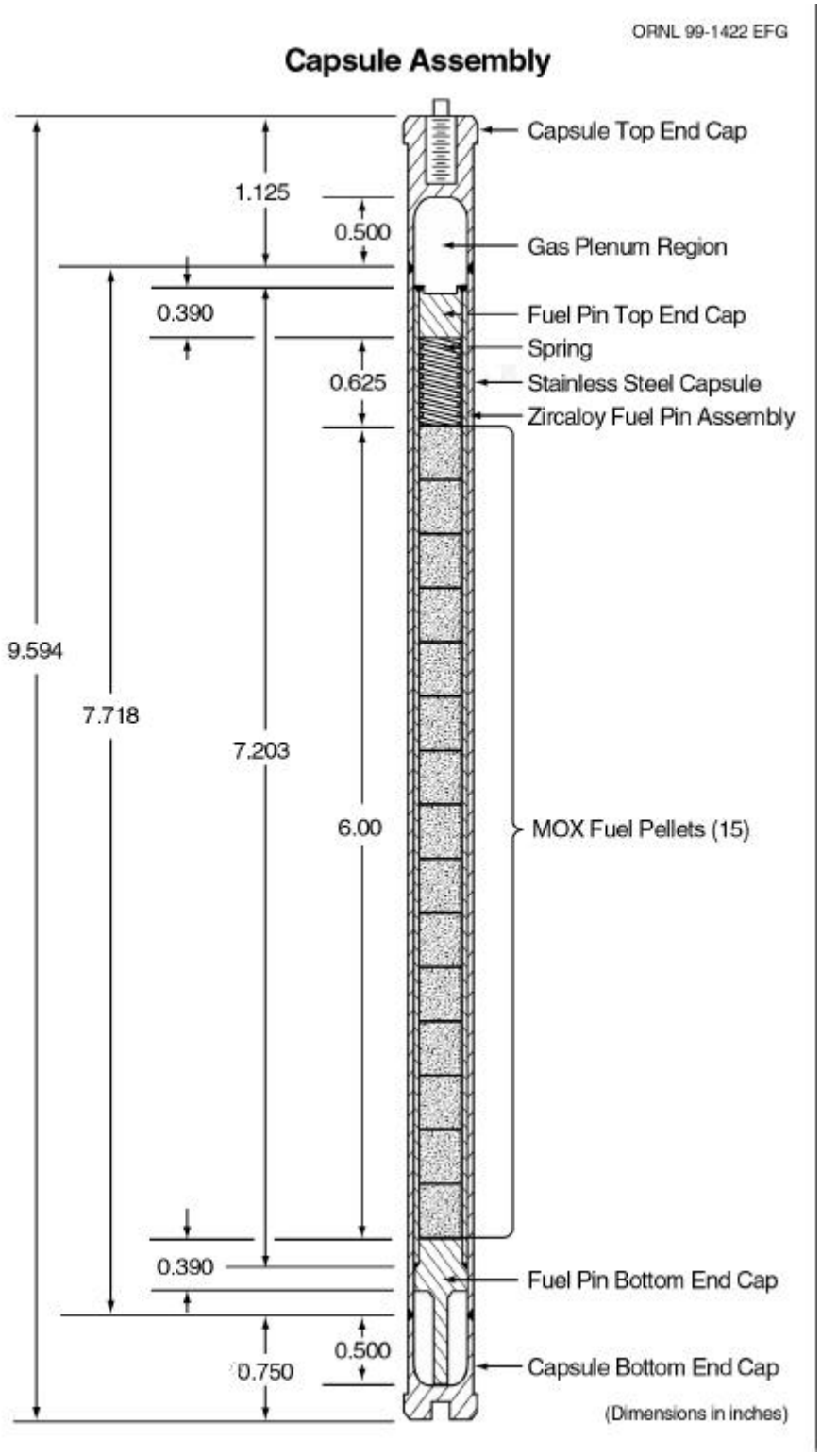

Figure 1 Cut away view of the MOX capsule.

purpose of measuring ^{85}Kr releases from fuel. Its operation is beyond the scope of this report [Refs. 2,3]

Several devices to puncture fuel pins and analyze their gas content have been designed and constructed over the years [Refs.4-11]. Two issues of primary concern have been the quality of the seal during the drilling or puncturing and a desire to minimize the volume of the apparatus so that the free volume of the fuel pin might be ascertained as well. The design of the described apparatus generally follows past practice with respect to mechanical design; however, limitation of the apparatus volume to a small value was not feasible because the drilling length required the use of a large bellows.

2.0 REQUIREMENTS AND CONCEPTUAL DESIGN

2.1 Requirements

The fission gas pressure measuring apparatus (FGPMA) has to perform two basic functions; the first is to measure the pressure and ^{85}Kr inventory in the capsule region to determine if the fuel pin has leaked. The second is to measure the pressure and ^{85}Kr inventory in the fuel pin to determine the fuel performance. Typically, these operations are conducted in a chamber that has first been evacuated and valved off. The capsule or fuel pin is then drilled or punched and the gases allowed to expand into the chamber. By measuring the resulting chamber pressure (usually below atmospheric) one can determine the capsule or fuel pin internal pressure by using the ideal gas law and the known volumes.

Thus, the first requirement of the system is that it be vacuum tight under the drilling or punching conditions. This is the most stringent condition as mechanical motion under vacuum conditions is a major source of problems. The second requirement is to minimize the volume of the chamber so that the fuel pin to chamber volume ratio is as small as possible, minimizing the gas expansion, thus maximizing the pressure to be measured and possibly allowing the post-drilling measurement of the capsule or fuel pin free volume. The third requirement is to monitor and measure the gas pressure in the drilling chamber. Finally, the fourth requirement is that all these actions must be conducted under remote conditions. In addition, a general requirement is that after the gas measurement has been completed, the capsule must be available for additional post irradiation examination (PIE) work (i.e., minimal structural distortion and no damage whatsoever to the fuel bearing region of the fuel pin).

2.2 Conceptual Design

Considerable thought was given to the option of drilling or punching. It was finally determined that the stainless steel capsule wall would be too difficult to punch through without seriously distorting the capsule and fuel pin walls, increasing the difficulty of later PIE tasks. The only straightforward way of drilling was to enter through the top cap, along the axis of the capsule, first stopping after penetrating the capsule and sampling the capsule gas before resuming further motion into the fuel pin. The disadvantage of this approach was the large amount of material that had to be drilled through before the plenums could be reached. The capsule path length could be minimized by sawing off capsule end cap material before drilling, but this approach could not be used for the fuel pin. Fortunately, the fuel pin is constructed of Zircaloy which is much easier to drill than irradiated stainless steel. Overall, the top-straight-in concept appeared to be feasible if a drill-press-like action could be achieved under vacuum conditions. Small milling machine components can easily supply the power and external movement if suitable vacuum seals could be engineered for both rotary and linear motion.

A search of the vacuum component literature yielded two candidates for the vacuum sealed mechanical operations. The first is a bellows which allows linear motion under vacuum conditions without a serious threat of leaks and the second is a ferrofluid rotary seal which allows the rotary motion necessary for drilling. The ferrofluid rotary seal is a unique component comprising a shaft, a bearing, a housing, a magnet, and a special magnetic fluid. By using the magnet to support the fluid around the shaft, a vacuum tight seal can be held even under conditions of high speed rotation.

By attaching the bottom of the bellows to a base and the ferrofluid rotary seal to the upper portion of the bellows, a drill-press-like action can be transmitted through a vacuum boundary, which is ideal for the problem at hand. The only drawback to this system is the rather large force on the ferrofluid seal and drive motor due to the atmospheric load pushing down on the top of the unit. This force is resisted by the drive shaft attached to the ferrofluid shaft and the bearing within the ferrofluid unit itself. In principal, one could use springs or other supporting mechanisms to reduce the load on the equipment, but this added complexity was not determined to be necessary for this application.

Pressure measurements are made with two devices, a low range capacitance manometer for apparatus pressures in the sub torr to 10 torr range and a wide range diaphragm manometer for measurements in the 10 to 1500 torr range. The volume of the apparatus (including connecting lines) is about 400 times that of the fuel pin gas volume so absolute pressures in the range of 1.3 torr (10 psia fuel pin pressure) to 130 torr (1000 psia fuel pin pressure) are expected to be encountered during drilling. The disadvantage of the rather large bellows volume is that the volume of the fuel pin cannot be reliably determined after drilling because the combined apparatus and fuel pin free volume is essentially the same as that of the apparatus alone, making any post-drilling volume measurements impractically insensitive.

The rest of the device is composed of the necessary mechanical clamps to hold the capsule in place, a base, the mill unit, the valves, lines, and a vacuum system. Figure 2 shows the final design of the major mechanical components. The associated drawings and drawing numbers are listed in Appendix B. Rather than design a system to trap the ^{85}Kr, advantage was taken of already existing equipment. The structural base of the unit is formed by a transfer carrier which minimizes additional handling, provides shielding during hot cell transfer operations, and forms a very massive base.

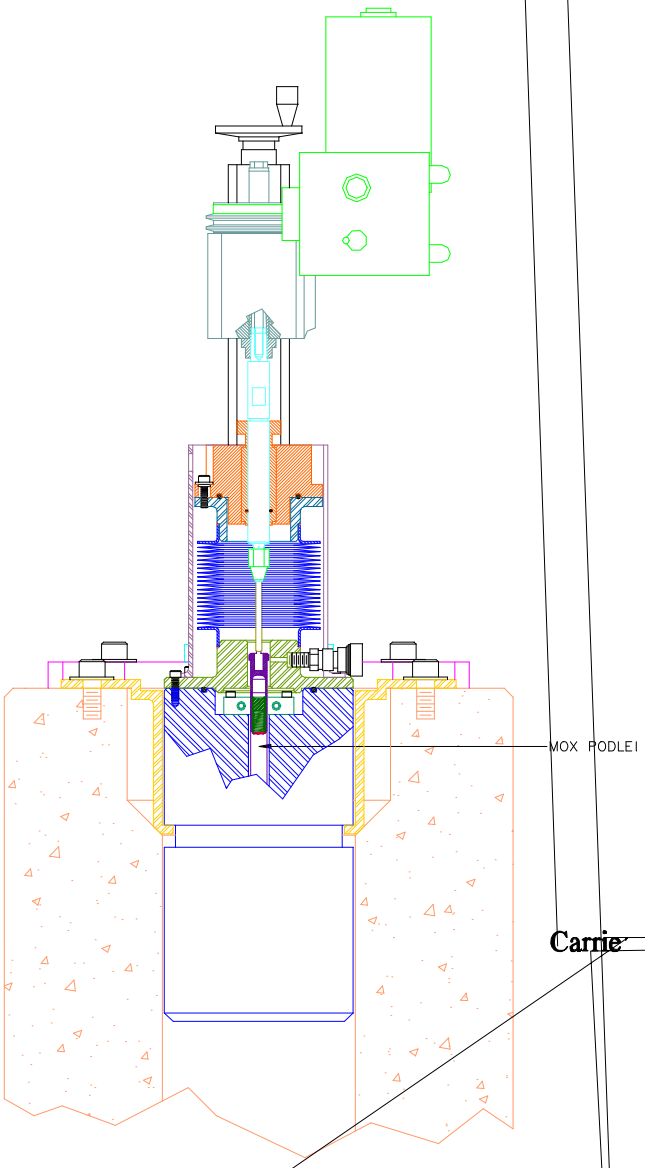

Carrie

3.0 APPARATUS

3.1 Logistics

While the majority of the PIE work [Ref. 12] is done within the main hot cell bank at Building 3525, it was determined that another, smaller hot cell within Building 3525, the Core Conduction Cooldown Test Facility (CCCTF) hot cell, would be more suitable for the fission gas pressure measuring apparatus (FGPMA) because of far lower contamination levels, personnel access, and the easy hook up to both the fission gas trap system and the vacuum system. The lower contamination levels and the personnel access are particularly important, as the fission gas apparatus and its supporting equipment are rather complicated and require interfacing with utilities and gas lines.

In order to move the capsule from the main hot cell bank to the CCCTF hot cell, the capsule must be first mounted into a mounting base, the base loaded into a shielded carrier, the carrier removed from the main hot cell bank, and the carrier transferred to the CCCFT hot cell. The FGPMA must then be assembled using the carrier as a base, and, finally, the drilling operation can begin. The operation is reversed to transfer the capsule back to the main hot cell. The trade-off in this method is all the extra handling required to move the capsule back and forth between the cells. The fact that the apparatus and the CCCTF hot cell stay relatively clean is a major operational advantage in that maintenance and adjustments can be made hands on.

The design of a fuel pin pressure measuring device is not a new concept [Refs. 4-11], but the doubly contained nature of the capsule along with the thick end caps make this application more challenging. Also, the particular logistics of this operation made handling more complex. Three major operational areas arise. The first is the preparation and transfer of the fuel pin from the main hot cell bank to the CCCTF hot cell, the second is the assembly of the apparatus in the CCCTF hot cell with the capsule in place, and the third is the actual operation of the apparatus.

3.2 Preparation of the Capsule in the Main Hot Cell Bank

To reduce the amount of material that must be drilled through and to provide a flat surface for drilling requires that the top of the capsule end cap be cut off just below the screw threads, leaving a web of material about 1/16" thick for the drill to pierce. Practice attempts to drill into the capsule using the threaded hole as a guide were not completely successful during testing. If the drill was not precisely centered, it often broke during drilling; also, the lack of lubrication (vacuum drilling) made drilling through even 1/8" of stainless steel risky. Coated cobalt drills were found to be the best candidate for the drilling through the stainless steel web. Drilling into the Zircaloy after penetrating the stainless steel does not present any special problems.

The components used in the preparation of the capsule in the main hot cell bank (less the saw used to trim off the top of the capsule) are shown in figure 3.

The trimmed capsule is first mounted in a close fitting clamp and the clamp and capsule unit is then fastened to a mount body. The clamp (figure 4) is placed so that it grips the capsule in the region of the fuel pin top, slightly distorting the capsule wall so that the fuel pin is held in place and will not rotate during drilling. The body both firmly holds the capsule in place, acts as vacuum boundary, and provides some additional shielding.

The capsule with the Clamp in place is shown in figure 4 and the unit installed in the Mounting Body is shown in figure 5.

Figure 3 Components used for mounting the MOX fuel pin in the fission gas apparatus: Mounting body (top center); lid & screws (center left); O ring (middle right); Clamp & screws (middle bottom).

Figure 4 Clamp mounted on trimmed capsule.

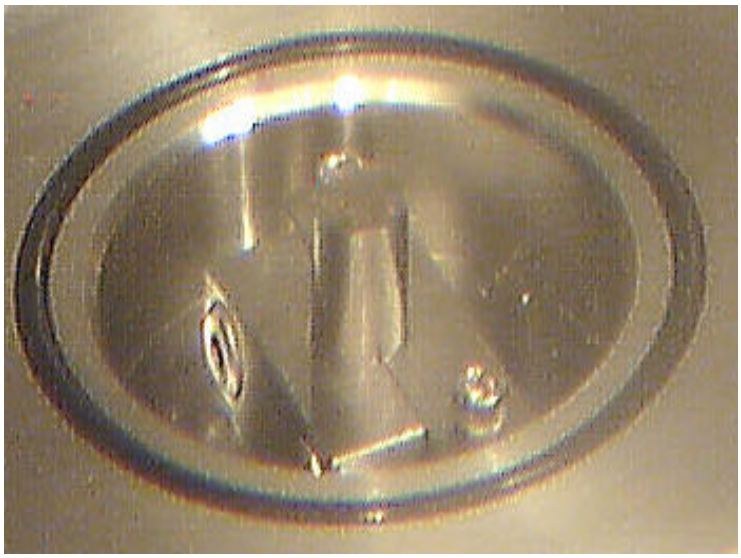

Figure 5 Close up of capsule and Clamp mounted in Mounting Body.

Once the capsule has been mounted in the Mounting Body, a handling cover sealed by an O-ring is bolted in place (see figure 6) and the unit placed in the carrier for transfer to the CCCTF cell.

In summary, the capsule is prepared in the main hot cell bank by trimming off the top portion of the capsule upper end cap to leave a thin web for drilling and by mounting the capsule in the Mounting Body with a special clamp. A lid is then placed on the Mounting Body which is then placed in a carrier for transfer to the CCCTF hot cell. As will be shown below, the carrier and Mounting Body form the base of the apparatus.

Figure 6 Completed Mounting Body with capsule clamped in place and lid installed. The body can now be placed in a shielded carrier for transfer to the CCCTF hot cell. Note the groove at the mid section of the body; special clips grip this groove to support the body in the shielded carrier.

3.3 Assembly of the Fission Gas Apparatus in the CCCTF Hot Cell

Once the shielded carrier containing the Mounting Body has been transferred to the CCCTF hot cell, the carrier lid is removed (via hoist) and a small in-cell hoist is used to lift the Mounting Body from the bottom of the carrier to the top where three Mounting clips are then remotely installed. A Centering Ring is placed over the Mounting Body to aid in later alignment and the Mounting Body cover is removed. After the clips are securely in place, the bellows unit is installed by means of six hold down screws. Finally, the mill head is installed by means of two bolts to fasten it to the carrier and a draw bolt is used to pull the drive arbor onto the hollow mill shaft. This sequence of operations is shown schematically in figure 7. The major components used in the assembly of the apparatus are shown in figure 8.

After the carrier lid is removed, the first action is to lift the Mounting Body into position by means of the in-cell hoist and install the three Mounting Clips to hold it in place as shown in figure 9.

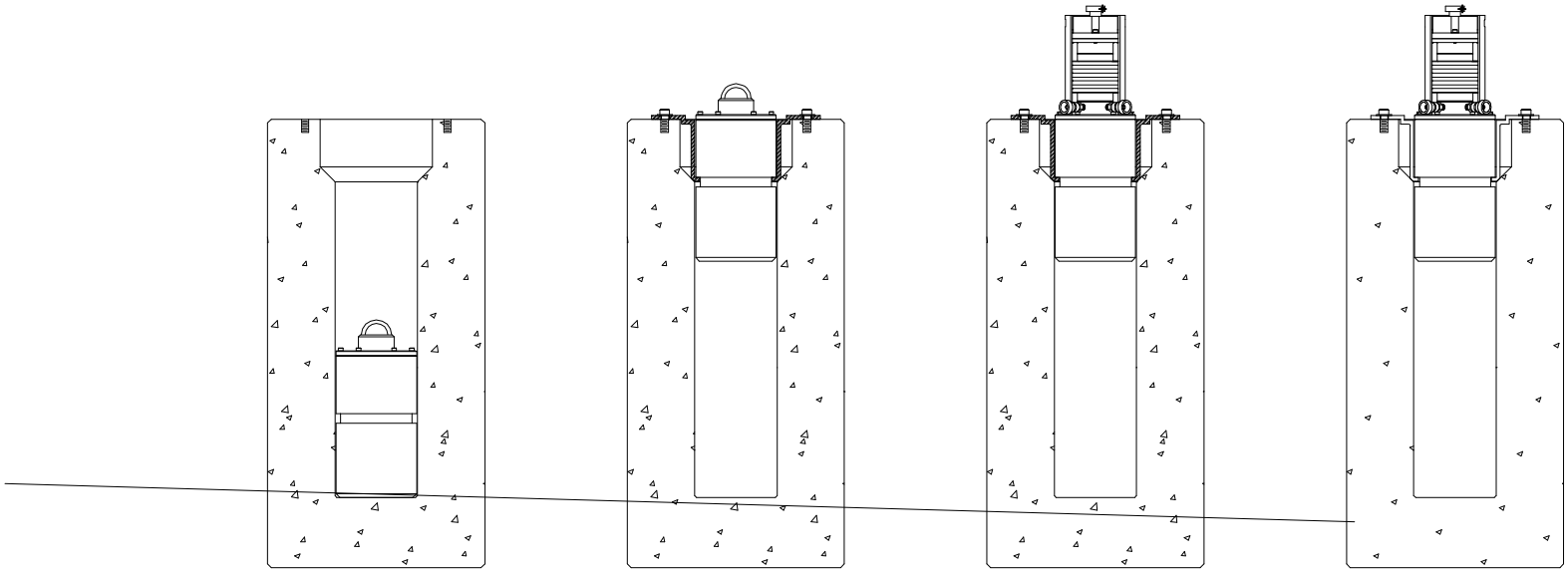

Figure 8 Major components to be used in the apparatus assembly: the Bellows Assembly (bottom left), the Mounting Clips and bolts (bottom center), the Centering Ring, (bottom right) the completed Mounting Body (right top), and the Mill Head (top center).

Figure 9 The Mounting Body held in place in the carrier by the Mounting Clips. A Centering Ring is used to help with later alignment.

Once the Mounting Body has been locked into place by tightening the Mounting Clips, a Centering Ring is installed to aid in locating and orientating the remainder of the assembly (see figure 9), the cover is removed, and the Bellows Assembly is attached. The Bellows Assembly is composed of the drilling arbor, bellows, and the ferrofluid seal as discussed before and is sealed to the Mounting Body by means of an O-ring and held in place by 6 screws. Figure 10 shows an assembled view.

Finally, the modified mill that drives the apparatus is installed by means of two mounting bolts and the drive shaft held in place by a draw screw. See figure 11.

Quick disconnects are used to hook up the gas lines to the valve control panel and the electrical connections are now made. This completes the assembly of the apparatus. Operation (discussed in Section 3.4) consists of valving the unit in the proper mode (calibration, vacuum, drilling, or sweeping) and by raising and lowering the mill head by means of the manual drive mechanism which has been modified so that it can be used by a

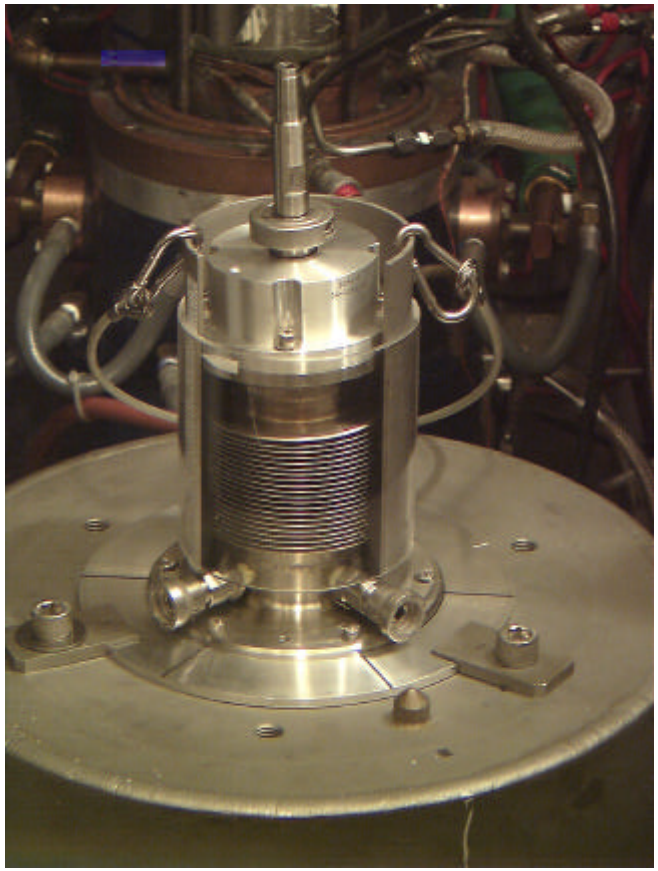

Figure 10. Bellows Assembly mounted on the Mounting Body.

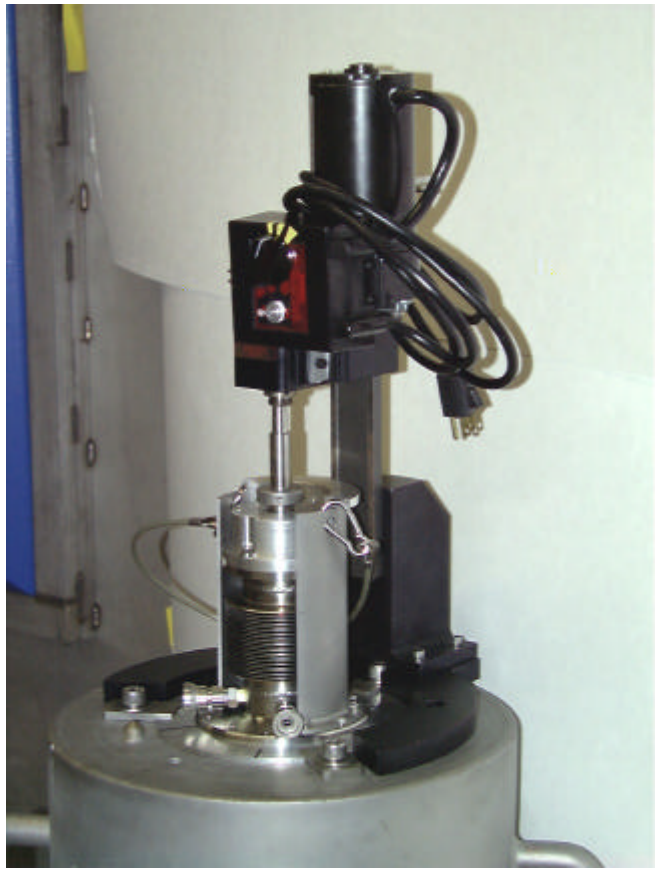

Figure 11 Mill Head mounted on the carrier and attached to the Bellows Assembly.

manipulator. The assembled apparatus within the hot cell is shown in figure 12. Note that other, unrelated, apparatus are located in the cell behind the FGPMA.

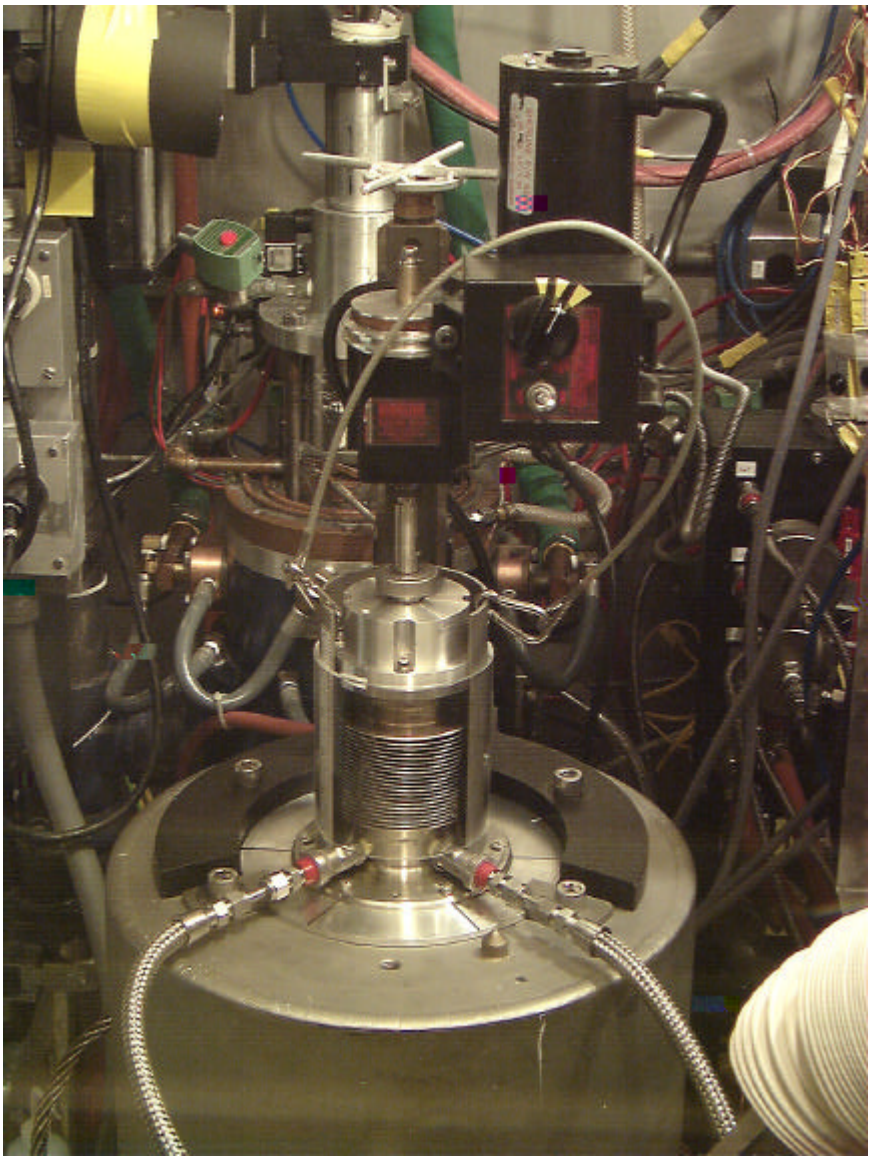

Figure 12 Completely assembled FGPMA in the CCCTF hot cell. Not shown is the Valve Panel.

The Valve Panel which switches the apparatus to and from various operational modes is shown in figure 13. A schematic of the valving is shown in figure 14. Operation of the valves is described in section 3.4.1 and 3.4.2.

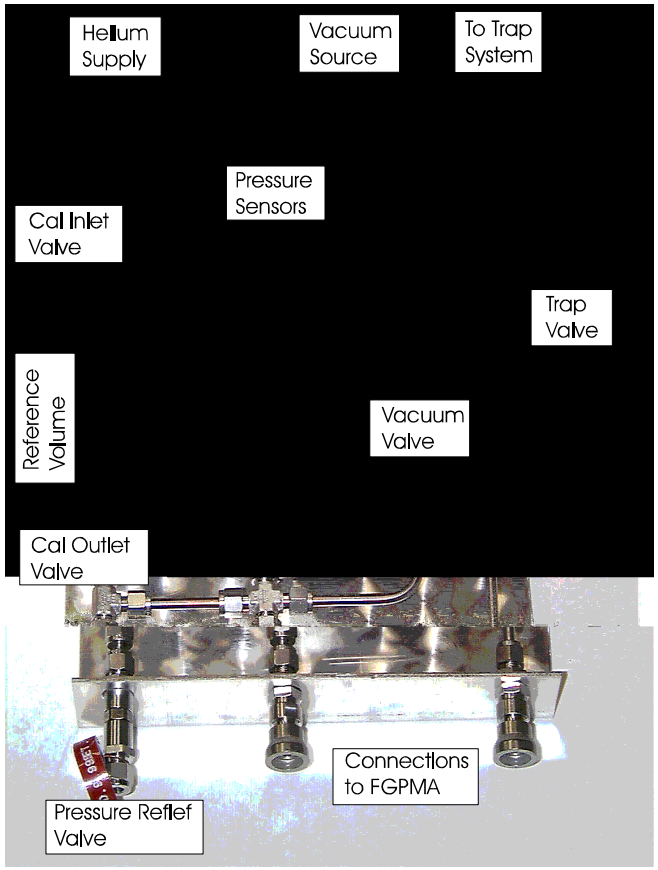

Figure 13 The Valve Panel used to switch the FGPMA between calibration, evacuate, drilling, and sweeping.

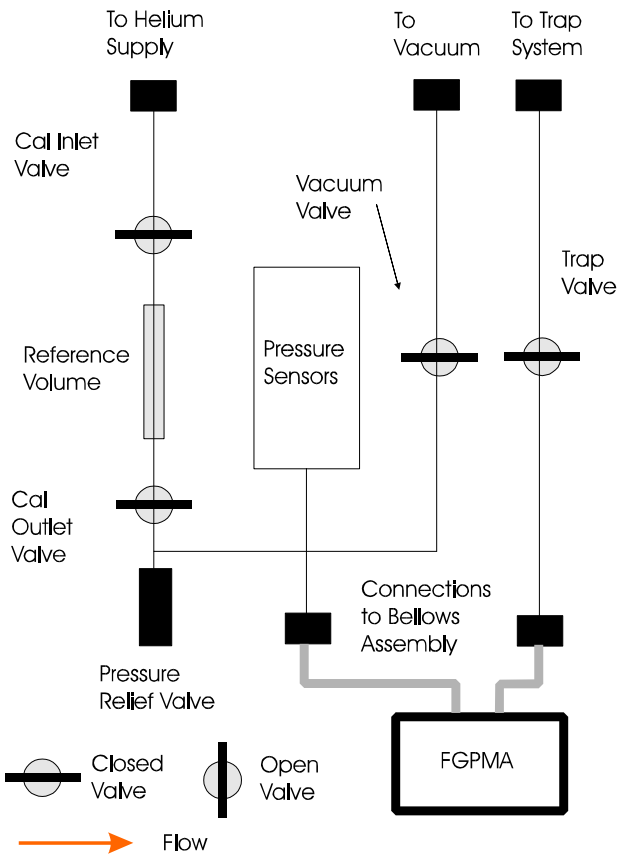

Figure 14 Schematic of Valve Panel showing the hook ups, pressure sensors, and valve arrangements. The mode shown isolates the FGPMA from the outside.

3.4 FGPMA Operation

Upon completion of assembly and connection to the valve panel, the FGPMA can be operated in four modes:

1) Evacuate;
2) Drill;
3) Calibrate; and
4) Sweep.

The apparatus incorporates a calibration system which functions by pressurizing a small volume of about 1 cc (approximately the free volume in a fuel pin) to a known pressure and then releasing this gas to the evacuated apparatus with a test capsule (or possibly a MOX capsule) in place. By measuring the apparatus pressure and using its known volume, one can compare the known calibration fill pressure with that determined by the FGPMA through measurement (and calculation) and determine if the apparatus is functioning correctly and what its accuracy and reproducibility are. In principal, the volume of the configured apparatus could also be determined with this calibrator, but using another much larger volume (approximately the same as that of the apparatus) is more accurate and avoids a possible systematic error. The reader may wonder if a before and after drilling FGPMA volume measurement could be taken and the difference used to compute the fuel pin or/and capsule plenum volumes, but the large volume of the apparatus compared to the plenum volumes results in low sensitivity and large relative errors.

3.4.1 Drilling

The basic operation of the apparatus requires that the capsule be drilled under a static vacuum. This requirement means that the apparatus must contain a reasonable vacuum (<500 mtorr) for several minutes while the pin is being drilled. This demands that the mechanical motion, both linear and rotary, seal exceptionally well and this has been accomplished with the components selected.

The capsule drilling operation proceeds by first evacuating the Bellows Assembly by closing all the valves except for the Vacuum Valve. See figure 15. The nominal FGPMA pressure under evacuated conditions is less than 100 mTorr. Once evacuation is accomplished, the Vacuum Valve is closed and the drilling begins. Penetration is indicated by a sudden increase in FGPMA pressure. At this point the pressure is recorded, the extent of bellow compression recorded (by a scale on its side), and the drilling stopped. The gas in the FGPMA can then be swept out of the bellows by first opening the Cal Inlet/Outlet Valves, letting the FGPMA come up to atmospheric pressure, and then opening the Trap Valve to allow the purged gases to flow through the cold trap system and thereby collect the ^{85}Kr (if any). Figure 16 shows this valve arrangement.

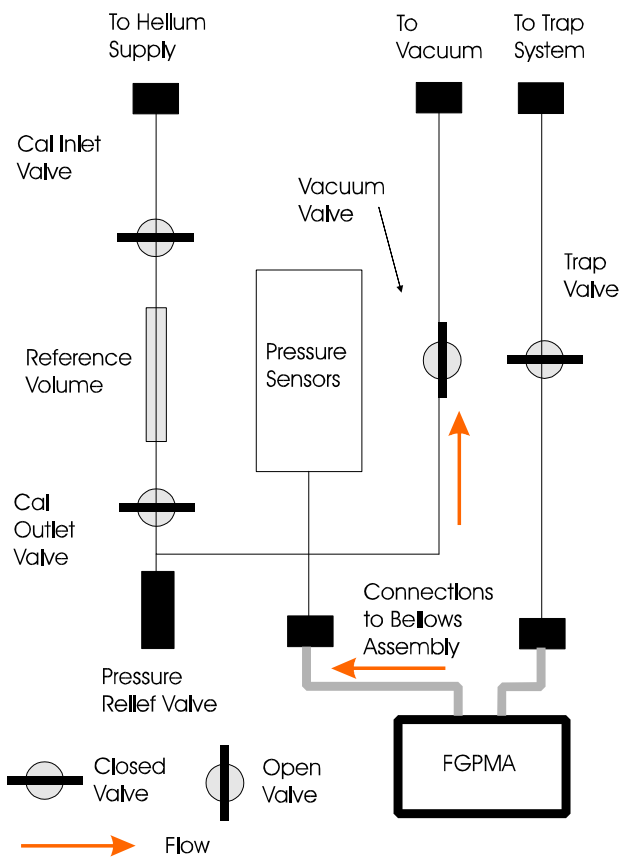

Figure 15 Valve arrangement for evacuating the FGPMA.

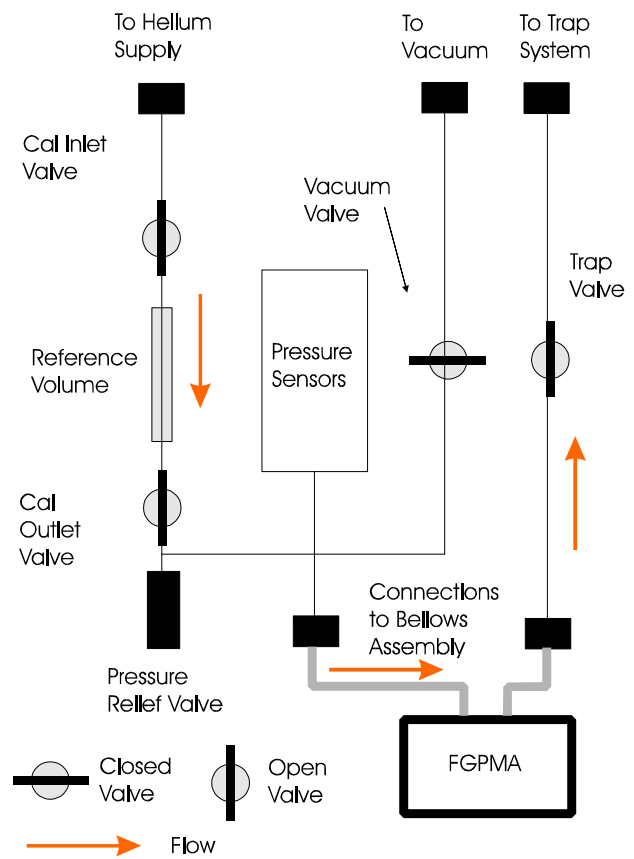

Figure 16 Valve arrangement for sweeping the released gases into the cold traps.

Once the capsule drilling operation has been completed, the bellows is again evacuated and the drilling resumed to penetrate the fuel pin. The steps described for the capsule are then repeated to measure the pressure and collect the krypton.

At the completion of the measuring process, four items of information will be available:

1) The capsule pressure;
2) The capsule ^{85}Kr content (if any);
3) The fuel pin pressure;
4) The fuel pin ^{85}Kr content.

Once the measurements have been completed, the apparatus will be disassembled and the Mounting Body with the fuel pin will be transferred back to the main cell bank.

3.4.2 Calibration

The Valve Panel contains a known reference volume that can be filled at randomly selected pressures and then allowed to flow into the FGPMA for the purposes of checking the operation and reproducibility of the pressure measurements obtained by use of the apparatus. After evacuating the FGPMA, the calibration check proceeds by opening the Cal Inlet Valve to allow the reference volume to be filled at the known pressure. The Cal Inlet Valve and the Vacuum Valve are then closed and the Cal Outlet Valve is opened. The pressure in the FGPMA is then recorded. These operations are shown in figures 17 and 18.

The recorded FGPMA pressure is used to back calculate an initial fill pressure. The fill pressure (known) is then compared to the calculated fill pressure as determined by the FGPMA measurement and the error estimated. In general, good agreement has been obtained between these numbers, particularly at higher pressures (>500 psia). Accuracy is reduced at lower pressures; one reason is the loss of measurement precision because the measured pressures fall in the low (less accurate) range of the available gauges.

A range of measurements was taken using the calibration reference volume and the results are shown in figure 19. See Appendix A for the details. The calibration testing shown in figure 19 (and given in Appendix A) is slightly skewed to the lower pressure ranges to better quantify the uncertainty in the expected operational region. The maximum observed error was 7.6%, the average error was 2.3%, and the standard deviation was 2%. Higher fill pressures resulted in greater accuracy. The accuracy at the lower fill pressures could be improved by the use of lower range gauges for reference volume fill pressure measurement and a more accurate mid range gauge for FGPMA pressure measurement.

The volume of the apparatus and the connecting lines were determined using a different, larger (approximately the same as the apparatus bellows assembly), known volume for greater

Figure

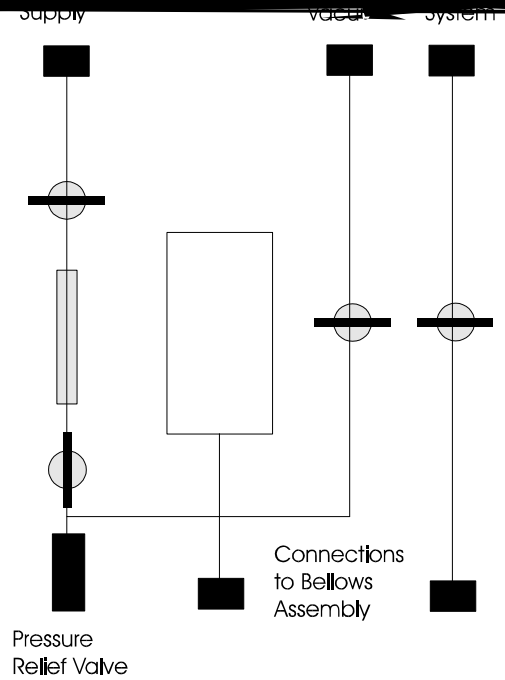

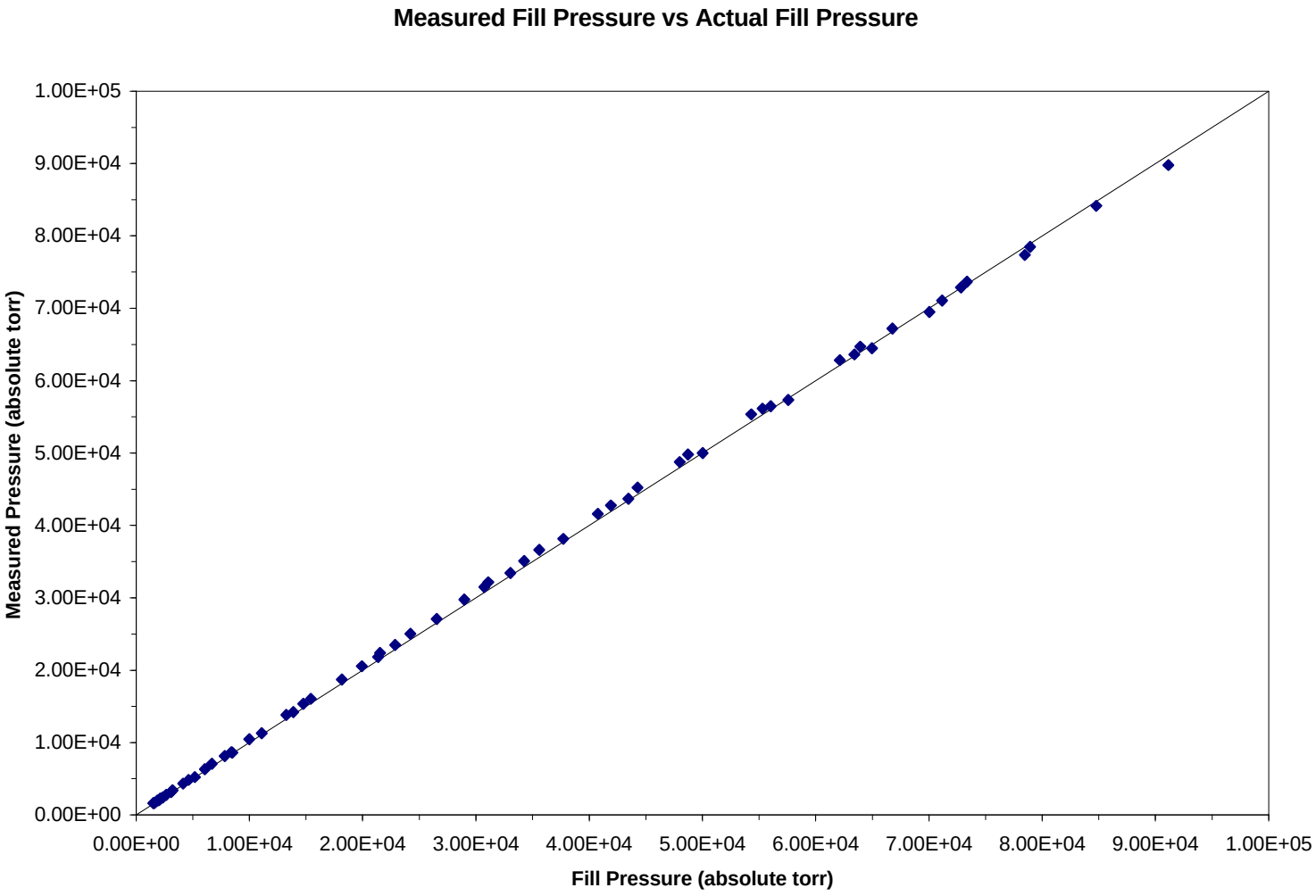

Figure 19 Results of calibration checks on the FGPMA using the reference volume mounted on the Valve Panel at various fill pressures.

accuracy and independence from the panel mounted reference volume.

In addition to the calibration trials, four blind tests were conducted using single chamber "simulator" capsules fabricated and charged to different internal pressures by Dennis Heatherly of the Engineering Technology Division. These capsules were mounted and drilled in the same manner as the MOX capsules will be. Good agreement between the measured and fill pressures was obtained, particularly at higher pressures. The results are shown in Table 1.

Table 1
Results of Simulator Testing

Simulator Number	Fill Pressure (psia)	Measured Pressure (psia)	Error
1	1800	1804	0.3%
2	115.2	124.2	8.3%
3	1137	1119	1.6%
4	239.3	250.0	4.6%

3.5 Pressure Calculations

The pressure calculations are based on the conservation of mass (gaseous) before and after the drilling operation. Applying the ideal gas law to determine the gaseous molar quantities and assuming constant temperature application yields the following formulation:

$$P_c V_c + P_r V_a = P_f (V_c + V_a)$$

where P_c is the capsule (or fuel pin) pressure, V_c is the capsule (or fuel pin) free volume, P_r is the apparatus residual pressure, V_a is the apparatus free volume (including connecting lines and valves, less the capsule volume, carefully noting which barriers have been drilled through), and P_f is the final pressure after drilling. The capsule pressure is computed using:

$$P_c = P_f + (P_f - P_r)\frac{V_a}{V_c}$$

3.6 Error Estimation

The sources of uncertainty stem primarily from the pressure measurements and capsule or fuel pin volume measurements. The pressure measurements are limiting at the lower gauge readings while the fuel pin volume uncertainties are more difficult to quantify since they depend on the fuel swelling which is difficult to determine to high accuracy [Ref. 13]. The best way around this situation is to measure the fuel pin free volume after drilling, but this is impractical in the current situation because of the large difference between apparatus and fuel pin free volumes. Thus, the fuel pin free volume is likely to be the greatest source of uncertainty.

An estimate of the uncertainty can be made by using the previous equation for the capsule pressure. Since the residual pressure is very small compared to the measurement pressure, it can be neglected for this approximate analysis. Starting with:

$$P_c = P_f\,(1 + \frac{V_a}{V_c})$$

We want to know how P_c varies with uncertainties in the other 3 variables so we take the partial derivatives of P_c:

$$\frac{\P P_c}{\P P_f} = \frac{V_a}{V_c} + 1 \approx \frac{P_c}{P_f} \qquad \frac{\P P_c}{\P V_a} = \frac{P_f}{V_c} \approx \frac{P_c}{V_a} \qquad \frac{\P P_c}{\P V_c} = -\frac{V_a P_f}{V_c^2} \approx -\frac{P_c}{V_c}$$

Assuming independence of the uncertainties, we can estimate the fractional uncertainty in P_c as:

$$\left(\frac{dP_c}{P_c}\right)^2 = \left(\frac{\P P_c}{\P P_f}\right)^2\left(\frac{dP_f}{P_c}\right)^2 + \left(\frac{\P P_c}{\P V_a}\right)^2\left(\frac{dV_a}{P_c}\right)^2 + \left(\frac{\P P_c}{\P V_c}\right)^2\left(\frac{dV_c}{P_c}\right)^2$$

Inserting the values for the partial derivatives one gets an approximate equation based on apparatus parameters:

$$\left(\frac{dP_c}{P_c}\right)^2 \approx \left(\frac{dP_f}{P_f}\right)^2 + \left(\frac{dV_a}{V_a}\right)^2 + \left(\frac{dV_c}{V_c}\right)^2$$

The uncertainty of the fuel pin pressure can be estimated to lie in the range of 4 to 20% depending on the uncertainty of the fuel pin free volume. See Table 2 for details on the parameter variations.

The estimation of the fuel pin free volume deserves some comment. Initially, the free volume of the fuel pin will be determined from the assembly drawings and the estimated pressure will be subject to the uncertainties in the fuel stack dimensions. However, as the

PIE proceeds additional information will become available on the state of the fuel and this data can be used to refine the estimate of the fuel pin free volume, reducing the uncertainty in the pressure measurement. Thus, the effect of fuel behavior on pressure measurement uncertainties can be limited by further, already planned, PIE work.

Table 2
Uncertainty Parameters

Parameter	Value	Comment
$*P_f/P_f$	2%	Accuracy may be as good as 0.5%, but at the extreme ranges of the scale accuracy suffers.
$*V_d/V_a$	3%	Estimated maximum volume error when reading "tick" marks indicating the position of the movable bellows (off by a tick mark)
$*V_c/V_c$	2% to 20%	The internal volume of the fuel pin is determined by the fuel stack height, fuel swelling, and assembly tolerances. Since the plenum volume is small compared to the fuel volume, small changes in fuel behavior can result in larger changes in plenum volume.

4.0 SUMMARY

An apparatus has been designed to measure the fission gas pressure in the FMDP MOX irradiation capsules. The apparatus functions by using a vacuum sealed drill-press-like action to drill through the trimmed off top of the MOX capsule to sample the gas in the capsule plenum region and then to continue drilling into the contained fuel pin, stopping at each barrier to measure the gas pressure and sweep the released gas through a cold trap system to determine the ^{85}Kr quantity. The heart of the apparatus is a ferrofluidic seal which utilizes a novel magnetic fluid for rotary vacuum sealing and a stainless steel bellows for linear vacuum sealing. A standard miniature milling machine is used to power the drill bit.

The apparatus utilizes a transfer cask for both transfer shielding and structure. A simple valve panel allows the selection of the mode of operation. Included in the system is a small reference volume that can be used to calibrate the apparatus prior to operation. Overall, the system is simple with few parts.

The apparatus has been checked for reproducibility by extensive use of the reference volume filled at a range of pressures. Overall accuracy is 2% and the results have been shown to be reproducible. The volume of the apparatus and connecting line was determined by another, larger, independent volume to avoid systematic errors and to improve accuracy. Finally, blind tests have been conducted with capsule simulators.

5.0 ACKNOWLEDGMENTS

The authors wish to thank the Irradiated Fuels Examination Laboratory Staff for their help with the assembly and testing of the FGPMA. Larry Ott and Dennis Heatherly of the Engineering Technology Division supplied support for the calibration and reproducibility aspects of the apparatus.

6. 0 REFERENCES

1. B.S. Cowell and S.A. Hodge, *Fissile Materials Disposition Program Light-Water Reactor Mixed Oxide Fuel Irradiation Test Project Plan*, ORNL/TM-13419, Rev 1, Feb 1998

2. R.N. Morris, et. al., *The Core Conduction Cooldown Test Facility: Current Status and Issues*, ORNL/NPR-91/7, January 1992

3. R.N. Morris, *Current Status of the CCCTF - Summer 1992*, ORNL/NPR-92/33, October 1992

4. Chismar, P.H., *Fission Gas Sampler*, Savannah River Laboratory, DP-814

5. Lazarus, M.E., *Fission Gas and Void Volume Measuring System*, Proceedings of 21st Conference on Remote Systems Technology, 1973

6. Managin, D.E. and Feldman, M.J., *The Remote Determination of Gas Pressure-Volume for Encapsulated Fuel Elements*, RSTD 13th Proceedings

7. Womack, R.E., *Fission Gas Analysis at the Hot Cell*, Proceedings of 19st Conference on Remote Systems Technology, 1971

8. *Inert Radioactive Fission Gas Sampler*, US Patent 3,372,274

9. *Method of and Means for Relieving Pressure in Gas Containers*, London Patent Office No. 932,878

10. *Process and Apparatus for Discharge of Fission Gases from Nuclear Reactor Fuel Elements*, London Patent Office No. 1,103,217

11. *Machine for Tapping Gas Present in a Closed Envelope or for Pressurizing such an Envelope*, London Patent Office No.1,122,088

12. R.N. Morris, *MOX Capsule Post-Irradiation Examination Vol. I: Test Plan for Low Burnup Fuel*, ORNL/MD/LTR-93, August 1997

13. S.A. Hodge, *Effects of Fission Gas Release and Pellet Swelling Within the LWR Mixed Oxide Irradiation Test Assembly*, ORNL/MD/LTR-83 Rev 1, November 1997

APPENDIX A

Over 60 calibration trials were conducted at various reference fill pressures and Bellows Assembly extensions (representing different drilling positions) to determine the performance of the FGPMA. See Table 3. It was generally found that the apparatus is more accurate at the higher pressures, but the pressure gauges used to measure both the reference volume fill pressure and the apparatus pressure have regions near the extremes of their range where accuracy suffers due to loss of significant digits. It is possible that optimizing the instrumentation may reduce the error at the lower pressure values. The average error was 2.3% and the standard deviation was 2%.

The values were selected to fill up the parameter space and the filling of the reference volume was done by both "ramping up" and "ramping" down the pressure. More cases were run at the lower pressures to examine the fall off of accuracy, so the average is skewed to the low pressure range. The gauges used have errors of 0.25% of full scale and 0.25% of reading, plus limitations due to significant digit readouts, usually plus or minus a digit. A *Scale* reading of 1 corresponds to an uncompressed bellows (starting point) and a *Scale* reading of 2.5 corresponds to a fully compressed bellows (drill break through in fuel pin). The tests were conducted with a dummy capsule in place representing the undrilled volume of an actual capsule.

Table 4 details the system volumes. The *Apparatus Expansion Volume* is the Bellows Assembly volume (function of *Scale* reading) plus the isolated Valve Panel and connecting line volumes minus the dummy capsule volume. The calibrator volume is treated as drilling into a capsule plenum. See Section 3.6.

Table 3
Results of FGPMA Calibration Testing

Test	Date	Apparatus Residual Pressure (absolute torr)	Final Apparatus Pressure (absolute torr)	Apparatus Scale Reading	Absolute Calibration Fill Pressure (absolute torr)	Apparatus Expansion Volume (cu inches)	Computed Fill Pressure (absolute torr)	Difference
1	20-Oct-99	0.035	5.341	1	1.88E+03	27.23	1.98E+03	5.8%
2	20-Oct-99	0.096	7.547	1	2.65E+03	27.23	2.79E+03	5.1%
3	20-Oct-99	0.079	13	1	4.62E+03	27.23	4.83E+03	4.7%
4	20-Oct-99	0.094	19	1	6.69E+03	27.23	7.07E+03	5.8%
5	20-Oct-99	0.035	28	1	9.99E+03	27.23	1.05E+04	4.7%
6	20-Oct-99	0.08	37	1	1.33E+04	27.23	1.38E+04	4.2%
7	20-Oct-99	0.084	55	1	1.99E+04	27.23	2.05E+04	3.1%
8	20-Oct-99	0.085	67	1	2.42E+04	27.23	2.50E+04	3.4%
9	20-Oct-99	0.079	86	1	3.11E+04	27.23	3.21E+04	3.4%
10	20-Oct-99	0.092	98	1	3.56E+04	27.23	3.66E+04	2.9%
11	20-Oct-99	0.094	121	1	4.43E+04	27.23	4.52E+04	2.1%
12	20-Oct-99	0.07	148	1	5.43E+04	27.23	5.53E+04	1.9%
13	20-Oct-99	0.073	173	1	6.39E+04	27.23	6.47E+04	1.2%
14	20-Oct-99	0.067	197	1	7.33E+04	27.23	7.37E+04	0.4%
15	20-Oct-99	0.089	225	1	8.48E+04	27.23	8.41E+04	-0.8%
16	21-Oct-99	0.036	6.225	2.5	1.51E+03	19.14	1.63E+03	7.6%
17	21-Oct-99	0.085	8.668	2.5	2.13E+03	19.14	2.26E+03	5.9%
18	21-Oct-99	0.032	13	2.5	3.22E+03	19.14	3.41E+03	6.0%
19	21-Oct-99	0.075	20	2.5	5.19E+03	19.14	5.24E+03	1.1%
20	21-Oct-99	0.079	31	2.5	7.82E+03	19.14	8.14E+03	4.0%
21	21-Oct-99	0.087	43	2.5	1.11E+04	19.14	1.13E+04	1.9%
22	21-Oct-99	0.033	54	2.5	1.39E+04	19.14	1.42E+04	2.4%
23	21-Oct-99	0.064	83	2.5	2.14E+04	19.14	2.18E+04	2.1%
24	21-Oct-99	0.073	103	2.5	2.65E+04	19.14	2.71E+04	2.1%
25	21-Oct-99	0.066	127	2.5	3.31E+04	19.14	3.34E+04	1.1%
26	21-Oct-99	0.075	145	2.5	3.77E+04	19.14	3.81E+04	1.1%
27	21-Oct-99	0.034	166	2.5	4.35E+04	19.14	4.37E+04	0.5%
28	21-Oct-99	0.031	190	2.5	5.00E+04	19.14	5.00E+04	0.0%
29	21-Oct-99	0.074	218	2.5	5.76E+04	19.14	5.74E+04	-0.4%
30	21-Oct-99	0.038	245	2.5	6.50E+04	19.14	6.45E+04	-0.8%
31	21-Oct-99	0.031	264	2.5	7.00E+04	19.14	6.95E+04	-0.8%

Test	Date	Apparatus Residual Pressure (absolute torr)	Final Apparatus Pressure (absolute torr)	Apparatus Scale Reading	Absolute Calibration Fill Pressure (absolute torr)	Apparatus Expansion Volume (cu inches)	Computed Fill Pressure (absolute torr)	Difference
32	21-Oct-99	0.083	294	2.5	7.85E+04	19.14	7.74E+04	-1.4%
33	21-Oct-99	0.029	218	1.5	7.28E+04	24.33	7.29E+04	0.1%
34	21-Oct-99	0.036	201	1.5	6.68E+04	24.33	6.72E+04	0.6%
35	21-Oct-99	0.068	188	1.5	6.21E+04	24.33	6.28E+04	1.2%
36	21-Oct-99	0.085	168	1.5	5.53E+04	24.33	5.61E+04	1.5%
37	21-Oct-99	0.092	149	1.5	4.87E+04	24.33	4.98E+04	2.2%
38	21-Oct-99	0.095	128	1.5	4.19E+04	24.33	4.28E+04	2.1%
39	21-Oct-99	0.091	105	1.5	3.42E+04	24.33	3.51E+04	2.4%
40	21-Oct-99	0.031	89	1.5	2.90E+04	24.33	2.97E+04	2.7%
41	21-Oct-99	0.037	67	1.5	2.15E+04	24.33	2.24E+04	4.0%
42	21-Oct-99	0.024	56	1.5	1.82E+04	24.33	1.87E+04	3.0%
43	21-Oct-99	0.025	46	1.5	1.48E+04	24.33	1.54E+04	4.2%
44	21-Oct-99	0.037	26	1.5	8.39E+03	24.33	8.68E+03	3.4%
45	21-Oct-99	0.069	19	1.5	6.06E+03	24.33	6.33E+03	4.4%
46	21-Oct-99	0.057	13	1.5	4.15E+03	24.33	4.33E+03	4.3%
47	21-Oct-99	0.092	9.588	1.5	3.07E+03	24.33	3.18E+03	3.6%
48	21-Oct-99	0.023	7.233	1.5	2.34E+03	24.33	2.41E+03	3.0%
49	21-Oct-99	0.092	5.018	1.5	1.62E+03	24.33	1.65E+03	1.9%
50	21-Oct-99	0.052	6.988	2	2.03E+03	21.63	2.06E+03	1.6%
51	21-Oct-99	0.065	29	2	8.50E+03	21.63	8.61E+03	1.3%
52	21-Oct-99	0.083	54	2	1.54E+04	21.63	1.60E+04	4.0%
53	21-Oct-99	0.075	79	2	2.29E+04	21.63	2.35E+04	2.6%
54	21-Oct-99	0.085	106	2	3.07E+04	21.63	3.15E+04	2.5%
55	21-Oct-99	0.083	140	2	4.08E+04	21.63	4.16E+04	2.1%
56	21-Oct-99	0.092	164	2	4.80E+04	21.63	4.87E+04	1.5%
57	21-Oct-99	0.078	190	2	5.60E+04	21.63	5.65E+04	0.8%
58	21-Oct-99	0.046	214	2	6.34E+04	21.63	6.36E+04	0.3%
59	21-Oct-99	0.062	239	2	7.12E+04	21.63	7.11E+04	-0.2%
60	21-Oct-99	0.091	264	2	7.89E+04	21.63	7.85E+04	-0.6%
61	21-Oct-99	0.086	302	2	9.11E+04	21.63	8.98E+04	-1.5%

Table 4 **Apparatus Volumes**	
Item	**Volume (cu inches)**
Isolated Valve Panel and connecting lines (Figure 14)	8.28
Dummy Capsule	1.527
Bellows Assembly (S = Scale Reading)	$0.402\ (S\text{-}1)^2 - 5.998\ (S\text{-}1) + 20.476$
Calibration Reference Volume	0.07298

APPENDIX B

Table 5 lists the drawings and drawing numbers for the components used in the FGPMA.

Table 5
Drawing Numbers

Drawing Name	Drawing Number
FMDP MOX Rodlet PIE Fission Gas Sampler Main Assembly	X3E020566A400
FMDP MOX Rodlet PIE Fission Gas Sampler Base and Cover Assembly	X3E020566A401
FMDP MOX Rodlet PIE Fission Gas Sampler Vacuum Sealed Drill Assembly	X3E020566A402
FMDP MOX Rodlet PIE Fission Gas Sampler Drill Assembly Details 1	X3E020566A403
FMDP MOX Rodlet PIE Fission Gas Sampler Drill Assembly Details 2	X3E020566A404
FMDP MOX Rodlet PIE Fission Gas Sampler Mill Stand and Misc. Details	X3E020566A405

DISTRIBUTION

1. P.T. Rhoads, U.S. Department of Energy, MD-3, 1000 Independence Avenue SW, Forrestal Building 6G-050, Washington DC 20585
2. J. Thompson, U.S. Department of Energy, MD-3, 1000 Independence Avenue SW, Forrestal Building 6G-050, Washington DC 20585

3-7. D. Alberstein, Los Alamos National Laboratory, P.O. Box 1663, Los Alamos, NM 87545

8-12. R.C. Pedersen, Idaho National Engineering and Environmental Laboratory, EROB, 2525 Fremont Avenue, Idaho Falls, ID 83415-3419

13. P. Kasik, MPR Associates Inc., 320 King Street, Alexandria, VA 22314-3238

14-18. C.A. Baldwin

19. E.E. Bloom

20-24 B.S. Cowell

25. S.R. Greene

26. D.W. Heatherly

27-31. S.A. Hodge

32. M.W. Kennard, Stoller Nuclear Fuel, 485 Washington Avenue, Pleasantville, NY 10570

33-37 L.L. Losh, Framatome Cogema Fuels, 3315 Old Forest Road, Lynchburg, Va 24506

38. L.J. Ott

39. C.M. Malone

40-44. R.N. Morris

45. N.H. Packan

46. K.R. Thoms

47. ORNL Laboratory Records (RC)