Current Status of the Oak Ridge Monte Carlo Codes: MORSE/SAS4 and CSAS/KENO

Margaret B. Emmett
Daniel F. Hollenbach
Oak Ridge National Laboratory

Presented at MC2000:
International Conference on Advanced Monte Carlo for Radiation Physics, Particle Transport Simulation and Applications

October 23, 2000

Lisbon Portugal

UT-BATTELLE

Topics

- Criticality codes in SCALE
  - –KENO-Va, KENO-VI, CSAS and auxiliary codes

- Shielding codes in SCALE
  - –MORSE - SAS3 - SAS4 and auxiliary codes

CSAS/KENO-V.a

- Automated problem-dependent multigroup cross-section processing
- 3-D multigroup Monte Carlo Criticality Safety Code
- Allowed geometry shapes and options
  - Cuboids
  - Cylinders, hemicylinders
  - Spheres, hemispheres
  - Rectangular pitched arrays
  - Holes
- Optimized geometry/tracking for reduced CPU time

CSAS6/KENO-VI

- Automated problem-dependent multigroup cross-section processing
- 3-D multigroup Monte Carlo Criticality Safety Code
- Generalized geometry composed of quadratic equations plus predefined shapes
- Other features include
  - Intersecting bodies
  - Rotations/translations
  - Triangular and rectangular pitched arrays
- Generalized geometry requires more CPU time than KENO V.a

Auxiliary Codes for CSAS/KENO

- CSPAN – Windows GUI for input setup
- KMART – Module sums and prints fluxes/activities by region, element, and isotope
- KENO3D – 3-D visualization tool for KENO geometry and KMART fluxes/activities (separate paper in Session NG-VIII)

CSPAN GUI – KENO Array Input

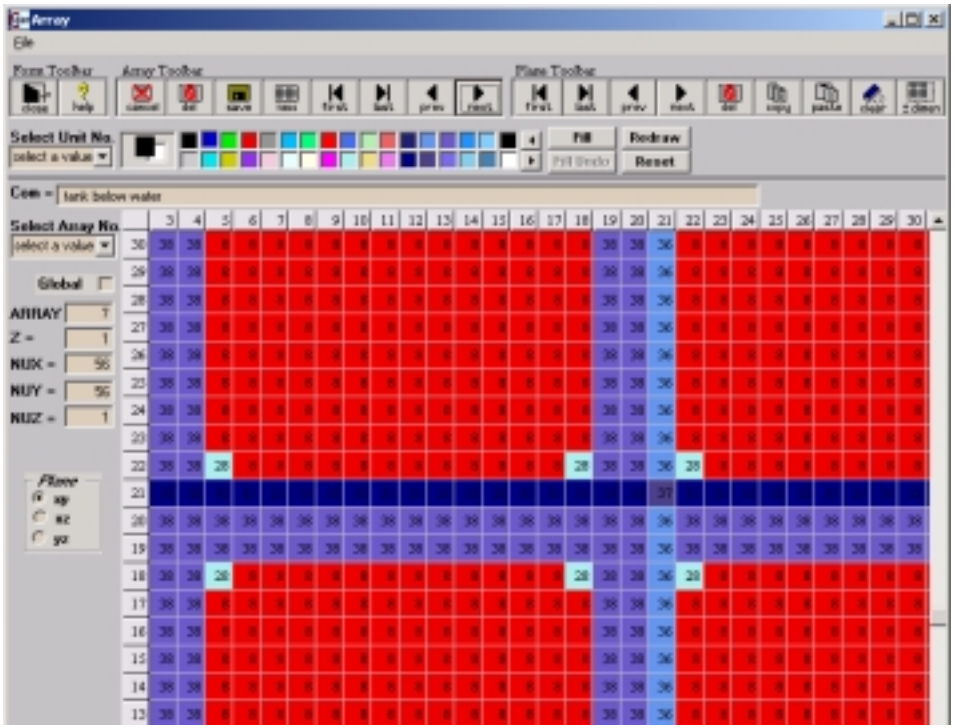

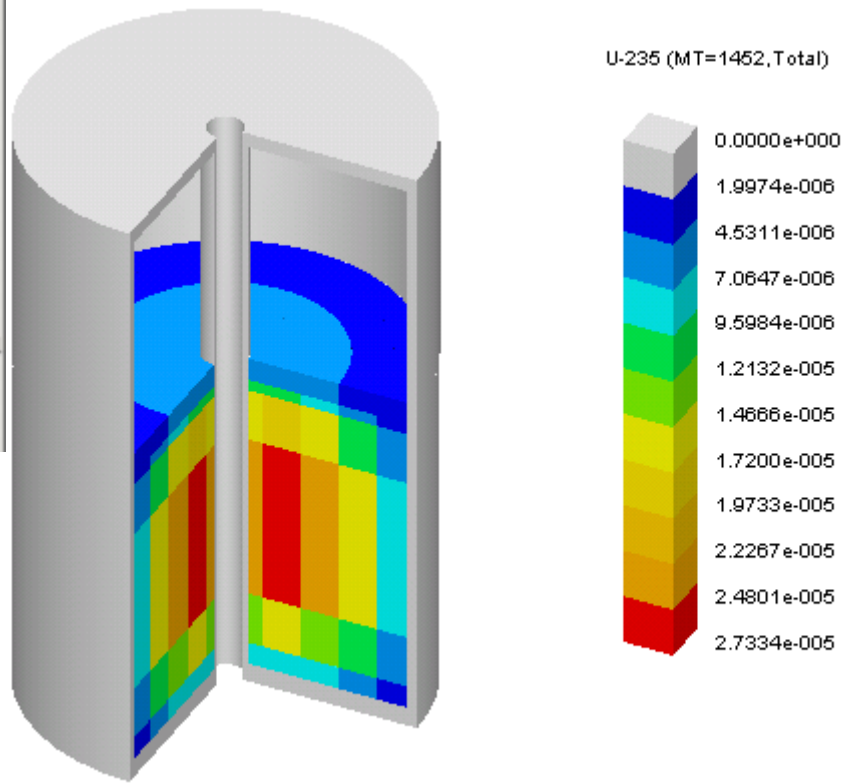

KENO3D Neutron Production Plot

SCALE5 – CSAS/KENO Sequences

- Programs converted to FORTRAN 90
- Uses either NITAWL-III (ENDF/B-VI capability) or CENTRM (continuous energy) to process resolved resonance region
- Can explicitly enter multiple unit cells

Future Plans for CSAS/KENO

- Continuous energy version of KENO
- ENDF/B-VI multigroup cross-section library
- ENDF/B-VI continuous energy (point cross section) library

MORSE

- 3-D multipurpose neutron and gamma ray transport code using multigroup cross sections
- Two versions:
  - MORSE CGA
  - MORSE SGC-Part of SCALE

    Distributed by RSICC

    (http://www-rsicc.ornl.gov/SOFTWARE.html)

Adjoint Calculations

- Classical use is for multiple source spectra to be analyzed with one response function
- Adjoint option in MORSE simple to activate due to multigroup structure
- The adjoint flux is the *'importance'* and can be used in forward biasing procedures
- Only energy-integrated adjoint results can be compared with forward results
- Forward, energy-dependent results can easily be obtained from adjoint calculations with minor changes to certain MORSE routines

What is Mars?

- A geometry package used by the MORSE code
- An extension of combinatorial geometry allowing use of multiple array specifications
- A versatile system for modeling complex lattice geometries
- A system using basic geometric bodies to define 3-D shapes

What is PICTURE?

- A program providing a printed view of arbitrary 2-D slices through the geometry mock-up
- An excellent debugging aid for complex geometry mock-ups
- A means of determining if media and region numbers are correct

Latest Changes to PICTURE

- New option has been added
- Plots can now be color plots to your computer screen
- Invoke this option by setting new parameter to *'SCR='* *to* *'Yes'*
- Default colors can be used
- Color choices are made using *'CLR='* followed by: number, red, green, blue components

Example: CLR= 1 255 0 255 2 0 100 0

Translation: Material 1 is magenta; material 2 is dark green

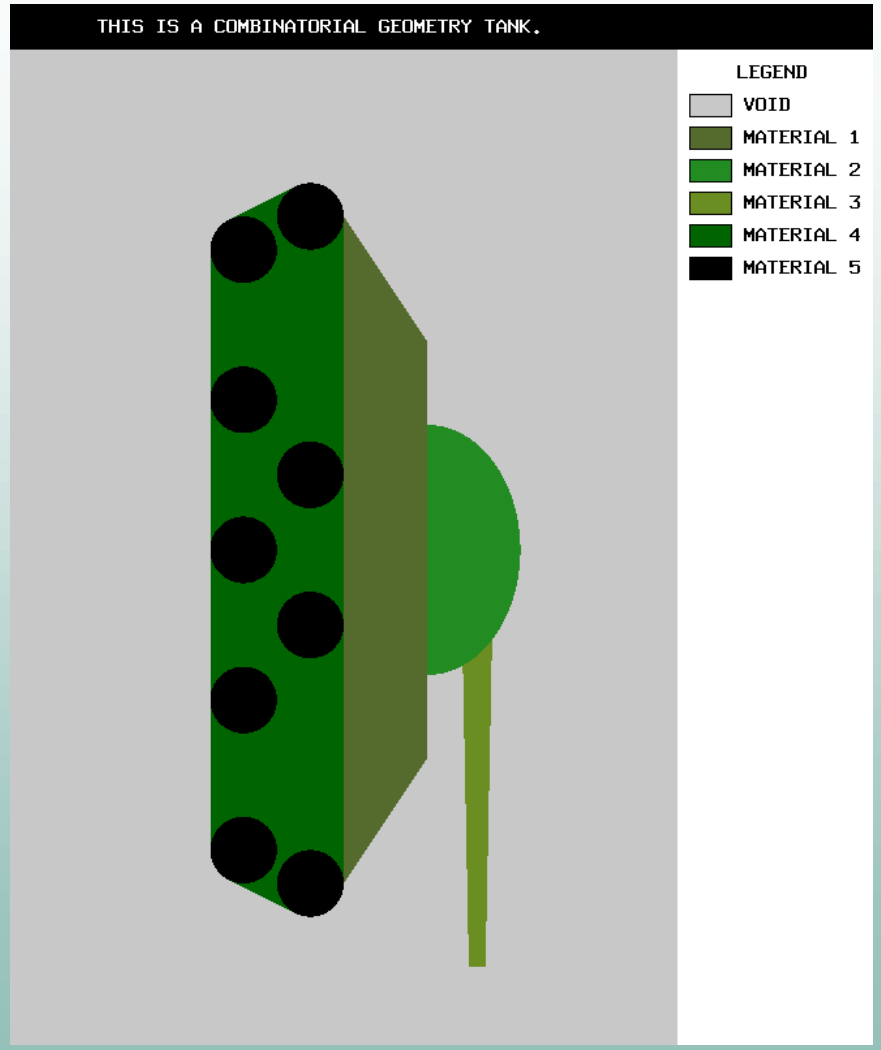

Current Status of the Oak Ridge Monte Carlo Codes:
MORSE/SAS4 and KENO

SAS4 - Shielding Analysis Sequence

- Developed to solve spent fuel shipping cask problems
  - –Has automated geometry modeling procedure
  - –Has automated selection of biasing parameters

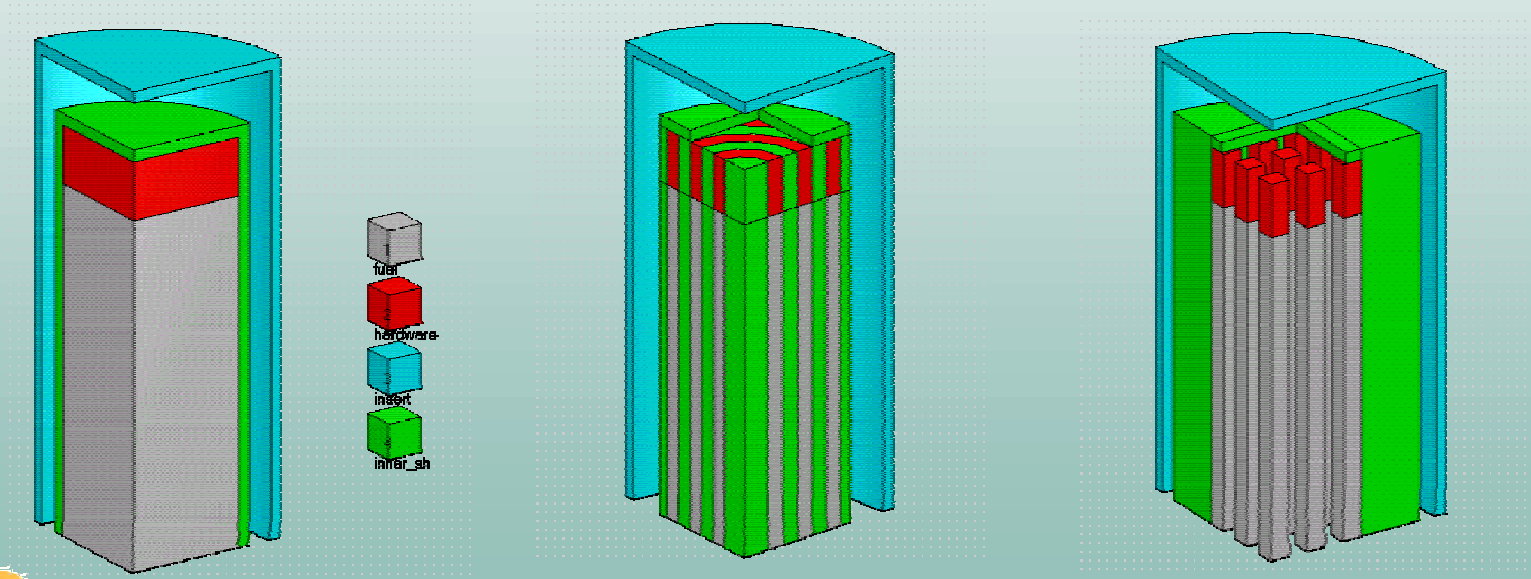

Automated Biasing Procedure

- Processing multigroup cross-section data including resonance self-shielding and cell-weighting treatments
- Calculation of adjoint fluxes in 1-D slab model with XSDRNPM discrete ordinates code
- Processing adjoint fluxes into biasing parameters
- Application of the biasing parameters in Monte Carlo calculation by MORSE-SGC Code
- Estimation of radiation doses exterior to the cask

Two Adjoint Functions Used In SAS4

- Point value, χ^* - value of a particle <u>leaving</u> a point (source or collision)

$$\chi^* \equiv \phi^*$$

- Event value W- value of a particle entering a point

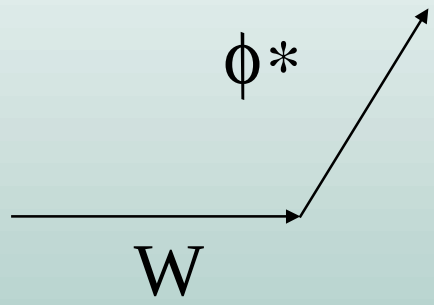

- ϕ^* is importance function for source and collision points
- W is importance function for path-length stretching

Adjoint Functions Used in SAS4 Biasings

- Source energy biasing (ϕ^*)
- Energy biasing at collision sites (ϕ^*)
- Russian roulette and splitting by energy group and spatial region (ϕ^*)
- Path-length stretching (W)
- Fission neutrons control (ϕ^*)
- Estimation probability for point detectors (ϕ^*)
- Source location biasing for axial responses (ϕ^*)

SAS4 Surface Detectors

- SAS4 previously had 4 PRESET surface detector locations for all geometry options
- Currently has preset locations only for the simplified geometry option
- For MARS geometry input option:
  - User may specify up to 36 surface detectors
  - Each surface may be subdivided into spatial and angular segments
- Determining which surface detector to score in required extensive revision to several MORSE routines including BDRYX, the boundary crossing estimation routine

SAS3 Execution Sequence

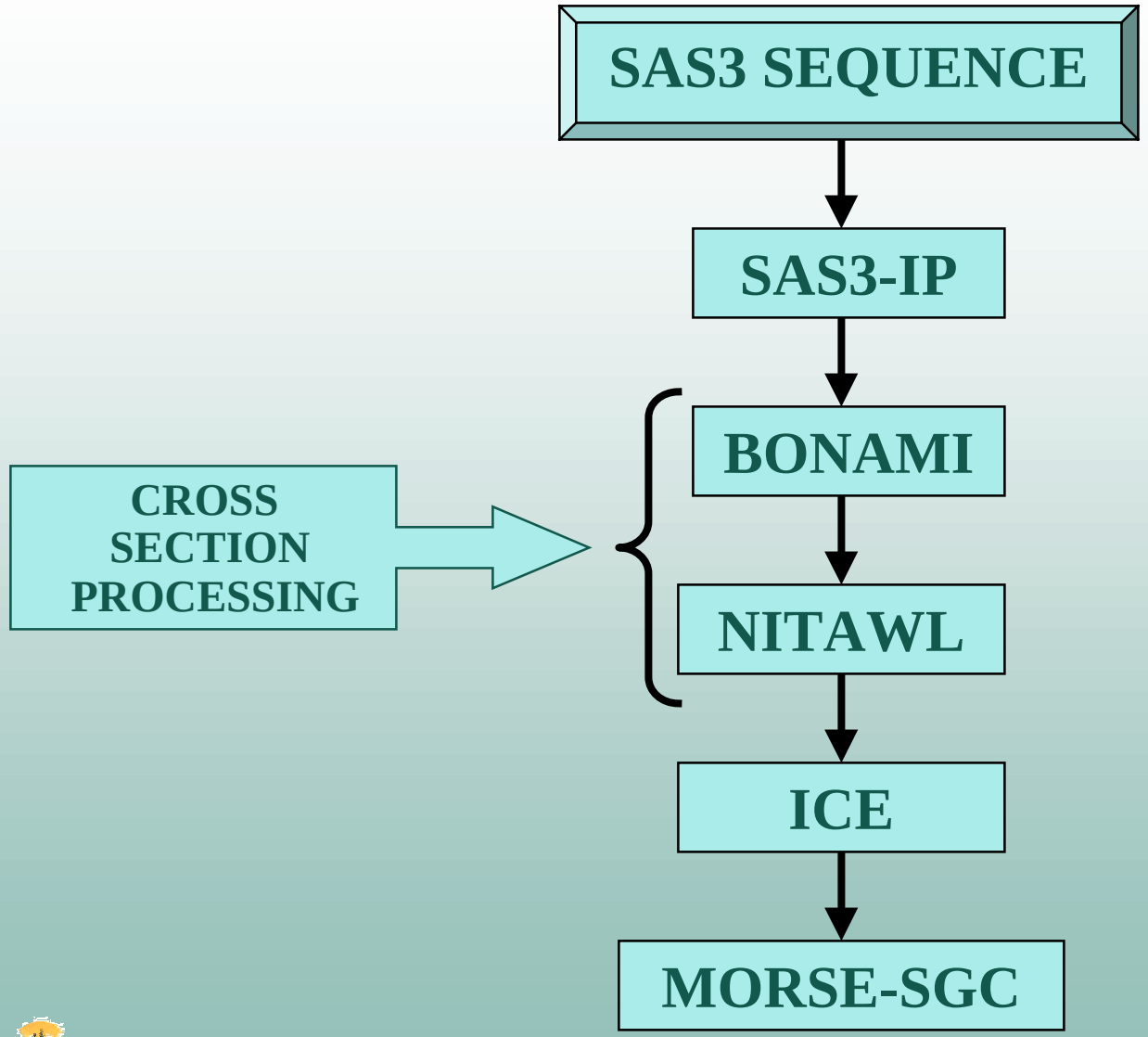

Problems SAS3 or MORSE Can Solve That SAS4 Can't

- Streaming through ventilation ducts and cask penetrations
- Dose rate analysis from large array of shipping casks
- Applications to more generalized shielding problems (e.g., criticality alarm systems)

Biasing

- SAS3 and stand-alone MORSE have no automated biasing procedure
- User must generate and input very detailed biasing parameters
- Can be formidable task of trial and error to choose optimal parameters
- Need to update SAS3 to do some degree of automated biasing

Future Directions for Shielding Sequences

- Currently SAS4 uses the 1-D code XSDRNPM to produce biasing parameters for MORSE
- Not sufficient for general purpose 3-D shielding calculations such as real reactor and away-from-reactor applications
- Future development expected to use S_N adjoint output from TORT, the 3-D discrete ordinates transport code
- Result will be a new SAS3-type sequence after extensive changes to MORSE and the SCALE shielding sequences
- Several funding proposals are in process

Graphical User Interfaces

- CSPAN – Criticality safety input processor for analysis - a windows PC GUI for the CSAS criticality sequence
- ESPN – Easy shielding processor input a windows PC GUI for the SAS4/MORSE shielding code
- See SCALE download page (http://www.cped.ornl.gov/scale/download.html) for releases and updates

Computer Systems and Languages

- All codes mentioned run on the following systems:
  - Workstations: DEC Alpha, IBM RISC 6000 series, SUN, HP
  - PCs (Windows 95/NT or later)
- Language:
  - All are FORTRAN 90 compatible using certain F90 compiler options
  - As updates are done, code is being converted to ‘pure’ FORTRAN 90

Summary

- All codes in SCALE are under configuration control and have been validated and verified.
- SCALE 5 will be ‘pure’ FORTRAN-90 - no extensions required
  - –Exception: some library routines are in ‘C’

Benchmarks

- Set of shielding benchmarks available on SCALE website: www.cped.ornl.gov/scale
- Set of neutronics benchmarks for mixed oxide fuel calculated with SCALE/CENTRM sequence documented in ORNL/TM-1999/299