Study of resonant reactions with radioactive ion beams and observation of simultaneous 2p emission

A. Galindo-Uribarri[a,*], J. Gomez del Campo[a], J.R. Beene[a], C.J. Gross[b], M.L. Halbert[a], J.F. Liang[a], S.D. Paul[b], D. Shapira[a], D.W. Stracener[a], R.L. Varner[a], E. Chavez[c], and M.E. Ortiz[c]

[a]Physics Division, Oak Ridge National Laboratory, Oak Ridge, Tennessee 37831 USA

[b]Oak Ridge Institute for Science and Education, Oak Ridge, Tennessee 37831 USA

[c]Instituto de Fisica, UNAM, 04510, Mexico, D.F., Mexico

A program to study resonant states in light nuclei with radioactive ion beams in inverse kinematics and using thick targets together with double-sided silicon strip detectors (DSSDs) has been started at the Holifield Radioactive Ion Beam Facility (HRIBF). This program has led to the discovery of the simultaneous two-proton decay from states in ^{18}Ne populated by ^{17}F + p. Results from our search for this long sought decay mode will be presented.

1. INTRODUCTION

Recent developments in accelerator and experimental techniques provide exciting opportunities to pursue new frontiers in nuclear structure and reaction physics. Until recently many of the experimental tools that nuclear physicists had developed could only be used to study stable isotopes. Radioactive projectiles remove the limitation to the naturally ocurring N/Z ratios of stable beams.

It is now becoming possible to systematically study properties of nuclei over a wide range of N/Z. Of particular interest are loosely bound nuclei near the limits of nuclear existence which are expected to exhibit modified shell structures, new collective modes, and exotic decays. Compared to conventional stable heavy-ion beams, radioactive ion beam (RIB) intensities are several orders of magnitude lower, particularly for those further from stability. New instrumentation and improved techniques are required to fully exploit these exotic beams.

Two-proton radioactivity was predicted forty years ago [1]. Several searches for two-proton emitters [2–4] have been unsuccesful until now. Figure 1 shows a schematic illustration of the possible decay mechanisms for 2p emission [1,5]. In all previous searches, the data are consistent with sequential one-proton emission.

Excited states of ^{18}Ne below an excitation energy of ~ 6.5 MeV are a good place to look

*Research at ORNL is supported by the U.S. DOE under contract DE-AC05-00OR22725 with UT-Battelle, LLC and under contract number DE-AC05-76OR000333 between the U.S. DOE and ORAU.

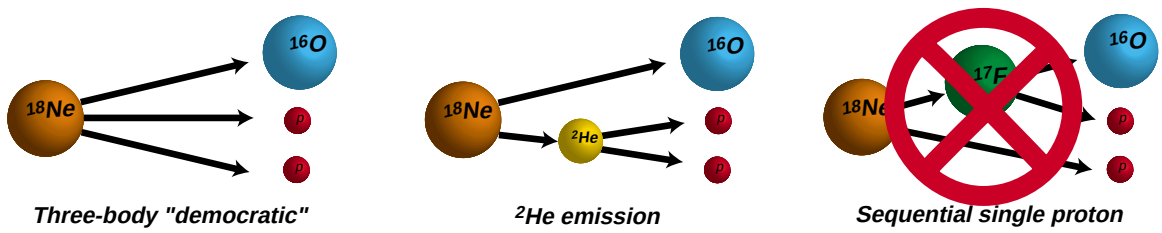

Figure 1. Schematic illustration of the possible processes leading to the ^{16}Opp final state

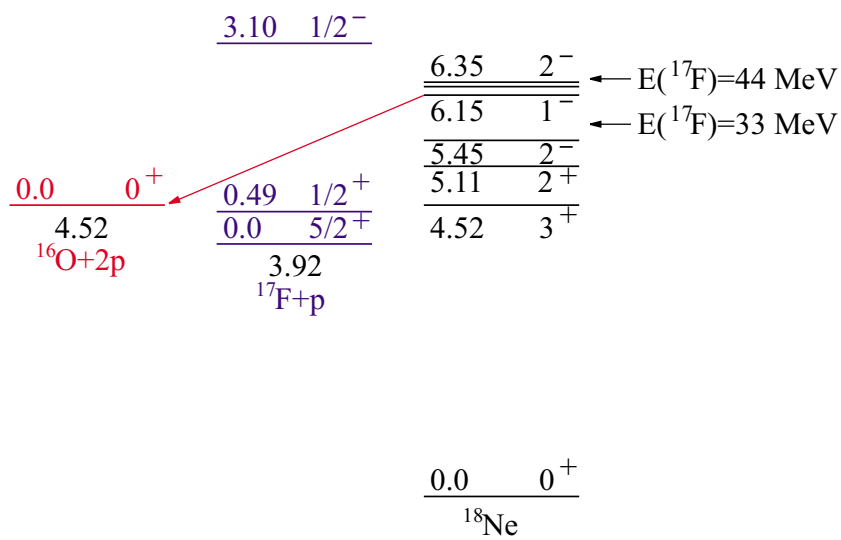

Figure 2. Level scheme for ^{18}Ne and its proton and two-proton daughters. Spins and parities are taken from Ref. [6,7]. The direct 2p decay would proceed as indicated by the long arrow.

for simultaneous two-proton decay, since there are no intermediate states in ^{17}F available through which sequential one-proton decay can occur (see Fig. 2). We have observed evidence for simultaneous two-proton emission from the 6.15 MeV state ($J^{\pi} = 1^{-}$) in ^{18}Ne with the radioactive beam-induced reaction ^{17}F + ^{1}H at bombarding energies of 33 and 44 MeV. The horizontal arrows in Fig. 2 mark the maximum excitation energies corresponding to the bombarding conditions.

2. RESONANCE SCATTERING

The use of resonance scattering with thin targets using normal kinematics has been a very useful spectroscopic tool in nuclear physics for many years. Elastic scattering of protons (polarized and unpolarized) from light nuclei has provided important information on the spin-parity and isospin assignments of the resonant states involved. These measurements have consisted mainly of excitation functions at a few angles. Even for these conventional techniques the measurement of excitation functions of cross sections and an-

alyzing powers with small energy steps are very time consuming. More efficient methods are desirable for the study of resonances using the limited RIB intensities available. The spectroscopy of very light nuclei (A$\sim$20) has experienced renewed interest primarily due to the appearance of RIBs.

2.1. Production of pure beams of ^{17}F

Several proton- and neutron-rich radioactive beams are now available for low-energy nuclear physics research from the HRIBF at Oak Ridge National Laboratory (ORNL). The K=105 Oak Ridge Isochronous Cyclotron (ORIC) and the HRIBF 25-MV Tandem accelerator were reconfigured into a first-generation ISOL-type radioactive ion beam facility. A detailed description of HRIBF can be found in Ref. [8]. One of the highest priorities of the HRIBF was the production of a ^{17}F beam. The development of this difficult beam required a target system that would release ^{17}F in a time commensurate with its half-life ($T_{1/2}$= 64.5 s) and stand high-intensity driver-beam bombardment. The 25-MV HRIBF Tandem accelerator is the highest operating voltage electrostatic accelerator in the world. The high terminal voltage has the advantage that completely stripped ions of masses up to about 60 can be produced. With magnetic deflection a strong suppression of lighter contaminant isobars can be achieved. Fluorine-17 beams of excellent quality can be produced between 1.5 AMeV to about 11 AMeV by using an intense direct-negative ion source [9] and fully stripping the ions. At low energies (below 1.5 AMeV and down to 0.5 AMeV), where full stripping is impractical, this method is complemented by using a positive beam of AlF^+ molecular ions produced using the electron beam plasma ion source (EBPIS) [10] and then dissociated and charge exchanged to form $^{17}F^-$ with only about 1% ^{17}O contamination. For our studies of resonance scattering the purity of the beam simplifies considerably the experimental setup.

2.2. Thick Target Technique

With the method described in Ref. [11] and references therein, a thick target is used with DSSDs and the excitation functions of elastic scattering are extracted from the measured recoil (proton) energy spectra. The target is thick enough to stop the beam, but thin enough to let the protons escape. The recoiling protons are detected and analyzed by angle and energy to determine the center-of-mass energy of the reaction. The excitation function of the reaction is thus measured over a large energy range in one run.

A proof-of-principle of the technique was carried out using stable beams. Excited states of ^{18}F were studied with the inverse reaction p(^{17}O,p)^{17}O. Excitation functions of cross sections obtained for three bombarding energies (14, 20, and 33 MeV) were compared to the excitation function measured by Sens *et al.* [12] with the standard technique (normal kinematics and thin target) at an equivalent backward angle. A similar shape of the excitation functions was obtained in the common range of energies.

Radioactive ion beams of $^{17}F^{+9}$ were used to study several resonant states in ^{18}Ne [11,13] including the astrophysically important 4.52 MeV 3^+ state recently observed [7] (E_{cm} = 0.6 $\pm$ .05 MeV, Γ = 18 $\pm$ 2 keV), and the 6.15 MeV 1^- state (E_{cm} = 2.22 $\pm$ .01 MeV, Γ = 50 $\pm$ 5 keV) of relevance to the 2p emission process.

3. DECAY OF A RESONANCE IN ^{18}Ne BY THE SIMULTANEOUS EMISSION OF TWO PROTONS

Pure ^{17}F beams, with a beam spot diameter smaller than 2mm and with intensities up to about 1.2 $\times$ 10^5 ions/s (for E_b=44 MeV) were produced by fully stripping and separating the interfering and more abundant ^{17}O ions by the beam transport system.

A ΔE-E solid state telescope was placed behind the 40-μm CH_2 target to detect the recoiling protons. A large 300 μm-thick ΔE detector consisted of a DSSD, 5 cm x 5 cm in size with 16 strips per side subtending a laboratory angle of 15°. This strip arrangement results in a total of 256 pixels, each effectively acting as an individual detector. The X-Y position resolution of 3mm is determined by the size of each pixel. The E detector consisted of a 100-μm thick, 900-mm^2 surface barrier detector subtending an angle of 10°. The two-proton events were defined as two coincident signals between nonadjacent strips of the DSSD. Every two-proton event consists of six parameters: two polar angles (θ), two azimuthal angles (ϕ), and two energies E_1, E_2. With these six parameters, distributions of the opening angle, the relative kinetic energy, and initial center-of-mass energy can be obtained. Figure 3 shows that the distributions of the opening angle and relative kinetic energy distributions, when compared to theoretical predictions, are not distinct enough to differentiate between the two mechanisms responsible for the simultaneous emission of the two protons.

Although the maximum excitation energy in ^{18}Ne is 6.3 MeV (3 MeV in ^{17}F+p) and no discrete state exists in ^{17}F for which sequential emission can proceed, it is possible that highly excited states in ^{17}F, whose widths are large enough, could result in some sequential emission. In particular, the excited state in ^{17}F at 5.1 MeV (8.4 MeV in ^{18}Ne) has a width of 1.5 MeV and could conceivably produce small amounts of sequential emission of the two protons through the tail of the 5.1 MeV state. However, the E_1 vs E_2 correlation would be asymmetric since the first proton decaying from ^{18}Ne to ^{17}F will have a very small energy; this is not the case in our data.

Results for the distribution of the entrance channel center-of-mass energies are shown in Fig. 4 and basically represent a two-proton excitation function. In the top panel of the figure we show the 2p excitation function for the full angular coverage of the detector (15°). The bottom panel shows the excitation function derived for the angular interval of 0° to 10°.

The solid curves drawn in Fig. 4 represent the Monte Carlo simulation for a ^{2}He decay constrained by the detector geometry. The significant broadening of the resonance (notice the horizontal axis E/E_{res}) is mostly due to the angular resolution in the experiment. In fact the bottom panel in Fig. 4 has a width almost a factor of two smaller than the one of the top panel due to the fact that the angular coverage is smaller. The solid squares plotted in the top panel of Fig. 4 correspond to the excitation function for the 2p events measured at a bombarding energy of 33 MeV. As can be seen from the figure, the cross section for the 2p events at 33 MeV is nearly a factor of 10 smaller than at 44 MeV, and no resonance is visible. This fact provides experimental evidence that the 2p emitting state in ^{18}Ne is the (J^π=1^-) state at 6.15 MeV.

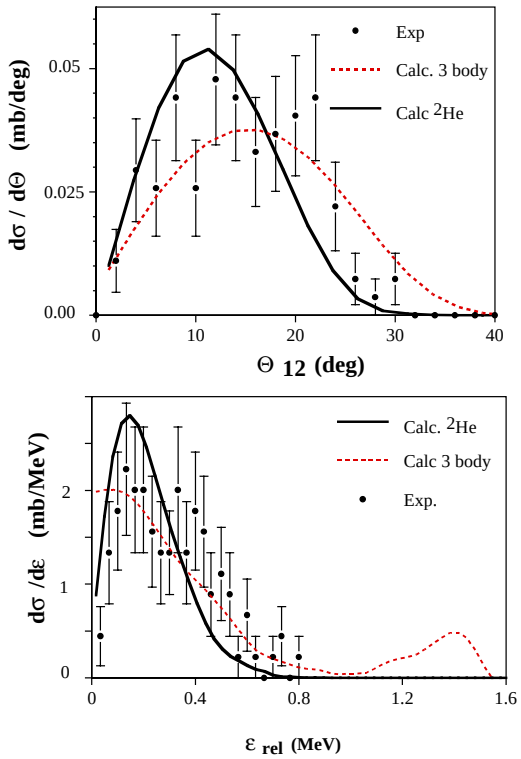

Figure 3. The top panel shows the experimental angular correlation (filled circles) compared to a Monte Carlo simulation assuming a ^{2}He emission (solid line) and a "democratic" decay (dashed curve). The bottom panel shows the relative kinetic energy distribution.

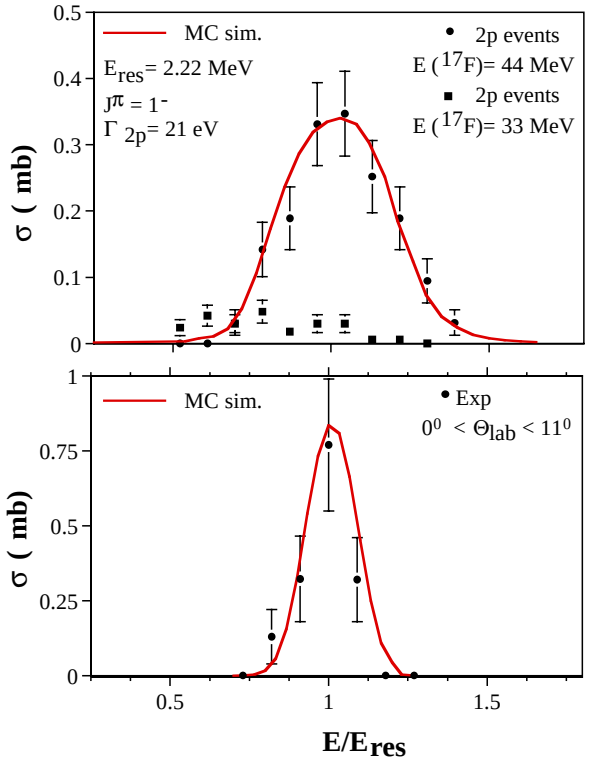

Figure 4. Experimental 2p excitation functions for the full angular coverage of the detector (top panel) and for the angular range 0° to 10° (bottom panel), extracted from the recoil protons for the reaction of 44 MeV ^{17}F on ^{1}H. The solid curves are the MULTI [14] calculation coupled to a Monte Carlo simulation.

4. COMMENTS

We have performed extensive simulations which indicate that data acquired with a larger lab angle coverage could easily distinguish between the two possible mechanisms (Fig. 5). A silicon DSSD forward array is currently under construction at HRIBF and will serve as the core of an experimental setup to further investigate the mechanism responsible for the 2p decay. Figure 6 shows a schematic representation of the highly pixelated detector which consists of a two-layered (ΔE-E) array of double-sided Si detectors (DSSD) covering the angles of $6 - 30°$. Each layer consists of 6 sectors; the front of each sector consists of 16 annular p+ strips and the back consists of 8 n+ azimuthal strips, resulting in a total of 768 independent pixels.

Spectroscopic information of nuclei far from stability generally has been obtained in complicated reactions in order to observe the desired exotic nuclei. A more direct and simpler method is to use elastic resonance scattering with radioactive beams and light nuclei in inverse kinematics with thick targets and DSSDs.

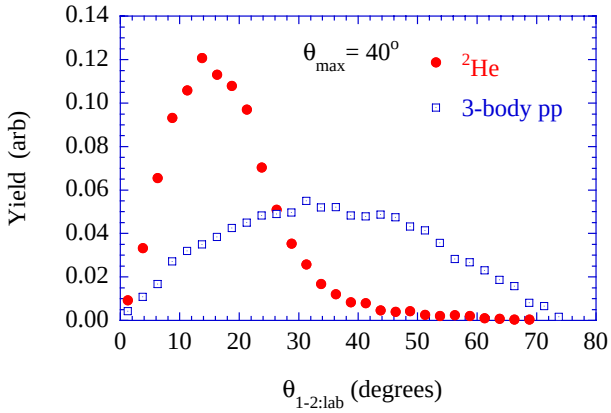

Figure 5. Monte Carlo simulation of the angular correlation of the 2 protons. This clearly shows for a large solid angle detection system the very different angular correlation for the 2 protons depending of whether it is a 3-body decay or a ^{2}He emission.

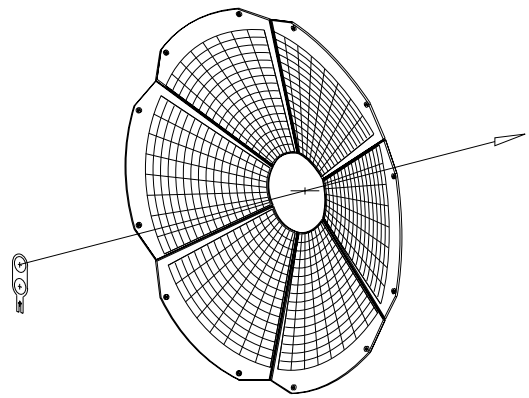

Figure 6. Schematic illustration of the Silicon Forward Array portion of the HyBall detection system now under construction.

REFERENCES

1. V. I. Goldansky, Nucl. Phys. 19, 482 (1960).
2. R. A. Kryger *et al.*, Phys. Rev. Lett. 74, 860 (1995).
3. D. F. Geesaman *et al.*, Phys. Rev. C 15, 1835 (1977).
4. C. R. Bain *et al.*, Phys. Lett. B 373, 35 (1996).
5. O. V. Bochkarev *et al.*, Sov. J. Nucl. Phys. 55, 955 (1992).
6. K. I. Hahn *et al.*, Phys. Rev. C 54, 1999 (1996).
7. D. Bardayan *et al.*, Phys. Rev. Lett. 83, 45 (1999).
8. R. Auble, *Proceedings of the Applications of Accelerators in Research and Industry*, eds. J.L. Duggan and I.L. Morgan, AIP Press, New York, CP475, 1999, p. 292.
9. G.D. Alton, Y. Liu, C. Williams and S.N. Murray, CP473, *Heavy Ion Accelerator Technologies: 8th Int. Conf.,* ed. K.W. Shepard, AIP Press, New York, 1999, p. 330.
10. G.D. Alton, Nucl. Instr. and Meth. A382, (1996) 207.
11. A. Galindo-Uribarri *et al.*, Nucl. Instrum. Methods Phys. Res. B 172, 647 (2000).
12. J.C. Sens, F. Rietsch, A. Pape and R. Armbruster, Nucl. Phys. A199, (1973) 232.
13. J. Gomez del Campo *et al.*, submitted to Phys. Rev. Lett.
14. R. O. Nelson, E. G. Bilpuch, G. E. Mitchell, Nucl. Instrum. Methods A 236, 128 (1985).