The Wastewater Triad Project at Oak Ridge National Laboratory

Joseph F. Walker, Jr.
Oak Ridge National Laboratory
Oak Ridge, Tennessee 37831-6330

ABSTRACT

Department of Energy underground storage tanks at Hanford, the Savannah River Site, Idaho National Engineering and Environmental Laboratory, and Oak Ridge National Laboratory contain over 340 million liters of radioactive waste which must be remediated. ORNL has developed an integrated approach which includes the cleanup of radioactive waste from aging underground storage tanks, as well as treatment of the radioactive waste currently being generated. The integrated approach includes (1) retrieval of radioactive sludge from underground storage tanks, (2) conditioning and transfer of the retrieved waste to treatment facilities and intermediate storage tanks, (3) development and deployment of technologies for treating the waste transferred to the intermediate storage tanks along with newly generated wastes, and (4) waste stabilization and packaging for disposal. The technologies for treating the intermediate storage tank wastes, along with the newly generated wastes, include separation of liquids and solids, removal of selected contaminants from the bulk liquid waste stream, and concentration of the bulk liquid waste. This paper summarizes the development and deployment of the Wastewater Triad Project, which includes a cross-flow filter for solid-liquid separation, an ion-exchange process using a highly selective sorbent for removal of cesium from the liquid waste, and a state-of-the-art subatmospheric evaporator for concentration of the liquid waste.

INTRODUCTION

The Wastewater Triad Project (WTP) consists of three operational systems: the Cesium Removal (CsR), the Out-of-Tank Evaporator (OTE), and the Solid/Liquid Separation (SLS) systems. These treatment systems were designed to reduce the volume and radioactivity of liquid low-level waste (LLLW) stored in the Melton Valley Storage Tanks (MVSTs) and are operated independently or in series in order to accomplish the treatment goals. All three systems are modular, skid-mounted systems that are self-contained, individually shielded, and designed to be decontaminated and removed once the project is complete. The CsR system consists of ion-exchange equipment for removing ^{137}Cs from LLLW and was demonstrated in 1997. During the cesium removal demonstration, 30,853 gal of radioactive supernate was processed and 1142 Ci of ^{137}Cs was removed from the supernate and loaded onto 70 gal of a crystalline silicotitanate (CST) sorbent manufactured by UOP, Inc. The OTE system is a subatmospheric single-stage evaporator system designed to concentrate LLLW into smaller volumes. The system was previously demonstrated in 1996 with ~22,000 gal of LLLW being processed and operated in 1998 with ~80,000 gal of LLLW being processed. The SLS system was designed to filter and remove suspended solids from LLLW to minimize further accumulation of sludge in new storage tanks or to prevent fouling of the CsR and OTE systems. The SLS system was installed and demonstrated in 1999 with ~45,000 gal of radioactive supernate being processed.

Details on the demonstration of the OTE, CsR, and SLS systems have been previously published.[1,2,3] Following the demonstrations, the systems were modified and upgraded so that any of the three could be run individually or in series. The three systems were then collectively deployed in baseline operations at Oak Ridge National Laboratory (ORNL) as the Wastewater Triad Project (WTP). The earlier demonstrations of the individual systems were designed to collect the detailed data and information necessary to upgrade the systems and to place them in baseline operations. During the deployment phase in FYs 1999 and 2000, the WTP was part of ORNL's Integrated Tank Waste

Management Plan, which combined the accelerated deployment of innovative technologies with an aggressive waste transfer schedule, to meet the unilateral order of the State of Tennessee Commissioners that requires treatment of transuranic sludge to begin by June 2002. During the deployment phase, data collection was limited to that information required to comply with operational or environmental permits and requirements. Therefore, the level of detail available for these systems during the demonstration phase is not available for the deployment phase.

OVERALL FLOWSHEET

A drawing showing the general layout and flowsheet of the WTP system is provided in Figure 1. In the treatment process, LLLW from any one of the eight MVSTs (W24 through W31) is pumped through the SLS system for filtration. The filtrate is then pumped to the CsR system feed tank, which holds about 500 gal. The CsR feed is pumped through ion-exchange columns to remove ^{137}Cs and is routed to the OTE system feed tank, which holds about 350 gal. The OTE system heats and evaporates water from the liquid and transfers the concentrated LLLW to the Capacity Increase Project (CIP) tanks for storage. The evaporated water is condensed, cooled, collected in a transport tanker, and then transported to the ORNL process waste system for treatment and discharge to the environment. The ion-exchange sorbent, manufactured by UOP, Inc., and designated as IE-911, which traps the ^{137}Cs, is removed from the ion-exchange column, dewatered, and packaged for on-site storage as solid low-level waste. The IE-911 is processed and packaged to meet the Nevada Test Site (NTS) Waste Acceptance Criteria (WAC) and will be shipped to the NTS for disposal at a later date. Most of the valving and control for the WTP system is automated and operated from a control room located in Building 7863, approximately 75 ft away from Buildings 7877 and 7830. Remote video cameras are utilized to view different aspects of the process. Optional processing schemes also include (1) the use of the existing 7830 decant system instead of the SLS system for providing LLLW to the CsR and OTE systems, (2) independent operation of CsR or OTE using either the decant system or SLS to provide LLLW feed, (3) independent operation of the SLS system to filter LLLW for recycle to or for storage in the CIP tanks, (4) operation of the OTE feed tank as a booster station for transferring LLLW from the MVSTs to the CIP tanks, and (5) receiving LLLW from CIP tanks to perform CsR and/or OTE processing.

OPERATIONAL RUNS

Ten WTP runs were completed during FYs 1999 and 2000. During this period, a total of ~185,000 gal of LLLW was processed. Details on the individual runs have been provided by Walker and Kent.[4] Eight of the ten WTP runs utilized the CsR system, and ~7700 Ci of ^{137}Cs was removed from the LLLW during these runs and concentrated on a CST ion-exchange sorbent. A typical breakthrough curve for the ion-exchange system is presented in Figure 2, where C is the concentration of ^{137}Cs exiting the ion-exchange system and C_0 is the concentration entering the system. As shown, the ion-exchange material removed the vast majority of ^{137}Cs from the supernate that was processed. The data indicate that >98% of the cesium was removed from the supernate and concentrated on the ion-exchange sorbent. The cesium-loaded ion-exchange material from the processing operations was sluiced into stainless steel high-integrity containers (HICs), which had a capacity of 60 ft^3 (449 gal). The ^{137}Cs loading in the HICs was limited by the NTS WAC to the class C limit of 4600 Ci/m^3; therefore, each of the HICs could contain a maximum of 7816 Ci of ^{137}Cs. It should also be noted that bench-scale simulations using the actual supernate to be processed were conducted prior to several of the full-scale ion-exchange runs. These simulations provided samples of loaded sorbent for analysis to document that the loaded sorbent was not hazardous as defined by the Toxicity Characteristic Leaching Procedure (TCLP) for RCRA metals. This was done to meet the NTS WAC. The data from these tests verified that the spent sorbent was nonhazardous for RCRA metals.

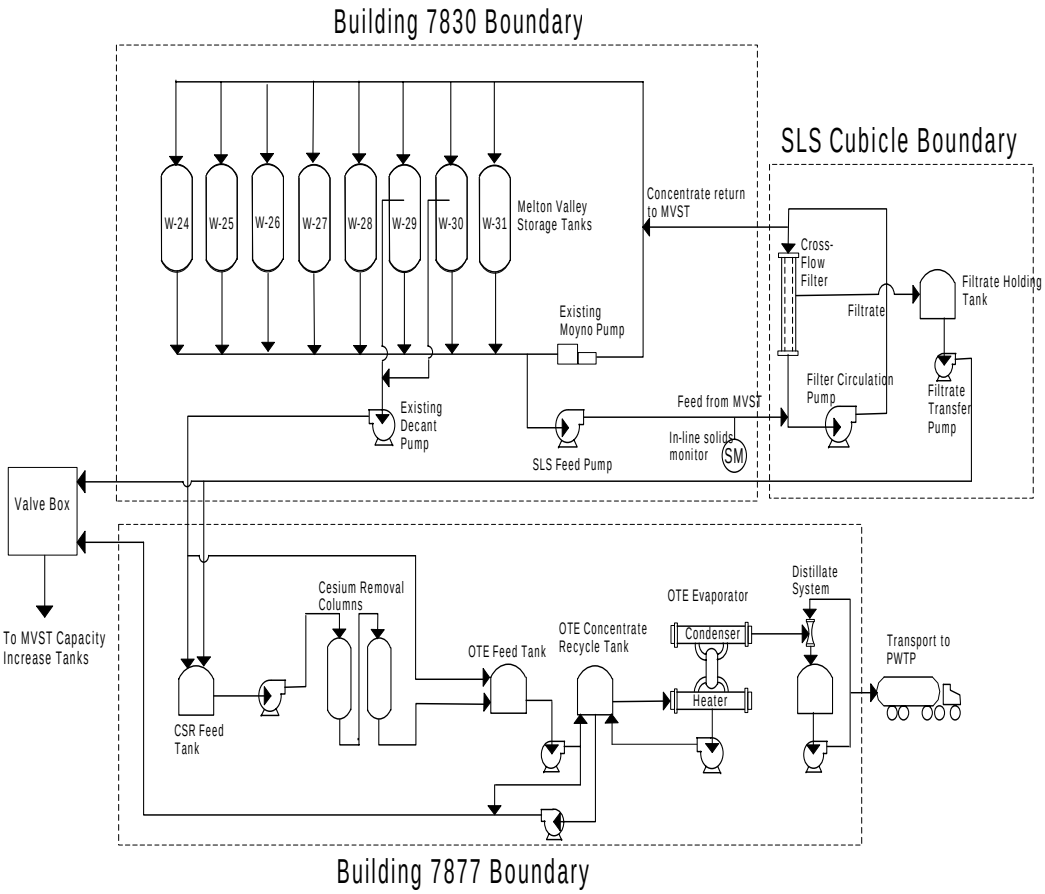

Fig. 1. Schematic diagram of the WTP operating system.

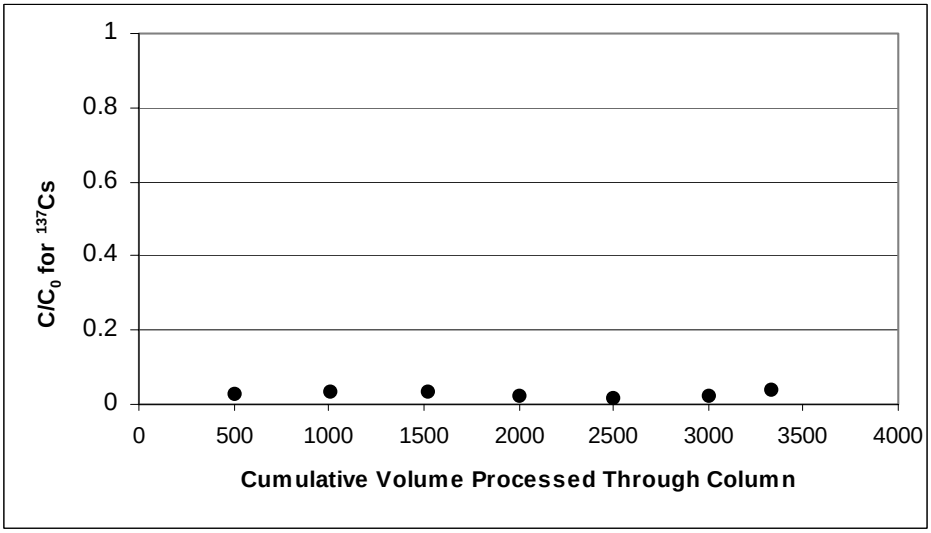

Fig. 2. Typical breakthrough curve for ^{137}Cs during the fifth operational run.

Nine of the ten WTP runs included the OTE. During these runs, ~75,000 gal of distillate was removed from the LLLW and transferred to the ORNL Process Waste Treatment Plant, thus freeing up storage tank volume that was required to keep ongoing processes operational at ORNL. The distillate from the OTE operations met the ^{137}Cs WAC for the ORNL Process Waste Treatment Plant, which was set at 400 Bq/L.

Four of the ten WTP runs utilized the SLS system, with two runs occurring during both FY1999 and FY2000. During the FY1999 runs, ~42,000 gal of supernate was processed through the SLS system. The details of these first two runs are being presented in a separate paper at the Spectrum 2000 conference (Paper 69 in the Treatment Technologies II Session) and will not be discussed here. In general, the 50-ft^2 cross-flow filter was designed to provide 1 to 5 gal/min (flux range of 0.02 to 0.1 gal/min/ft^2) of filtrate, and actual production was between 0.6 and 8.0 gal/min (flux range of 0.012 to 0.16 gal/min/ft^2).

WTP run 9 processed the feed from MVST W24, utilizing the SLS and OTE systems in series. Approximately 12,000 gal of LLLW was processed through the SLS during this run. A graph showing the weight percent of solids in the SLS feed as function of time is presented in Figure 3. The percent solids initially started at ~2% and then rapidly decreased to <1%. It is typical for the solids level in the SLS feed to initially be higher due to the design of the MVST facility. The suction legs for the SLS system are located near the bottom of the MVSTs, well below the level of the accumulated sludge in the tanks. To avoid transferring concentrated sludge to the SLS system, Moyno pumps, which are part of the MVST facility, are initially operated to recirculate the sludge in the tank and clear the sludge surrounding the suction leg. After clearing the sludge from the dip leg, the Moynos are deenergized and the double-diaphragm pumps that feed the SLS system are energized. It may take several hours for the double-diaphragm pumps to pick up the loose solids in the cone formed by the Moyno pumps and for the cone to stabilize. After the cone had stabilized, the solids content remained below 1% for ~16 days of operation. On March 27 the solids content in the feed started to rise and increased from ~0.6 to ~3% over a period of approximately 28 h. The percent solids then jumped from ~3 to ~22%, indicating that the cone around the suction leg in the MVST being processed had collapsed. The SLS system was then flushed with water to remove the solids from the system. During the period in which the SLS system was being flushed, meetings were held with personnel responsible for waste operations at ORNL to assess the possibility of reforming the cone in MVST W24. Material balances indicated that the liquid level in MVST W24 had dropped below the surface of the sludge layer in the tank and the cone could not be reformed.

The filtrate flow as a function of time is presented in Figure 4 for run 9. It should be noted that the filtrate flow often dropped to zero. This is because the filtrate was produced in 80-gal batches and the filtrate discharge valve would close when the high-level set point indicated the filtrate tank was full. The SLS control system was programmed to send the filtrate to the CsR feed tank only when the CsR feed tank was low enough to accept the entire 80-gal batch. As can be seen from Figure 4, the filtrate production rate climbed to ~4–5 gal/min and operated at this rate for ~8 days before declining to a rate of ~ 1 gal/min over the next 2 days. The 4–5 gal/min rate was typical of the filtrate rate during the latter stage of the SLS operations, which occurred in FY1999.[3] The filtrate production rate for a cross-flow filter typically declines for a period of time after startup and then reaches a steady-state production rate. The ~1-gal/min rate reached at the close of run 9 was adequate for the WTP because the CsR and OTE systems generally operate at 1 gal/min; therefore, the SLS did not become a bottleneck for the downstream processes.

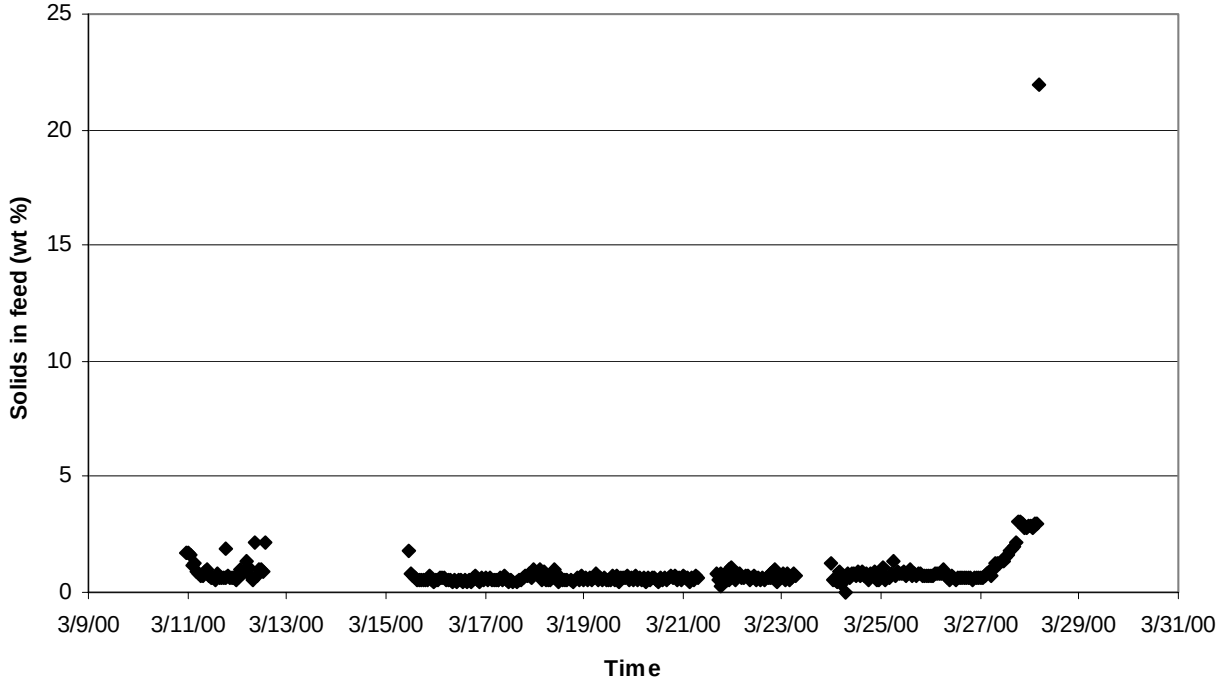

Fig. 3. Weight percent solids in the SLS feed as a function of time for run 9

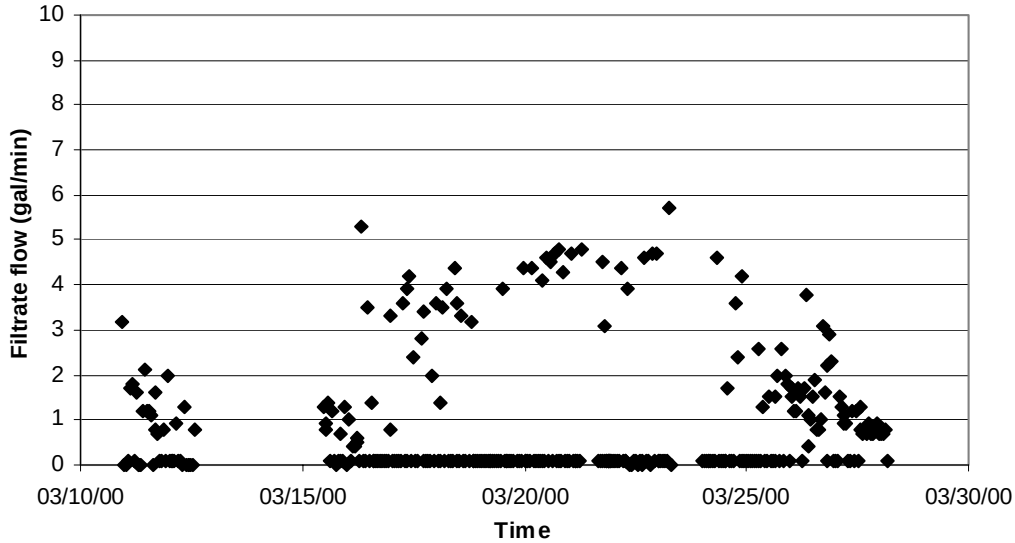

Fig. 4. Filtrate flow as a function of time for the SLS during the ninth operational run.

WTP run 10 processed the feed from MVST W26, utilizing the SLS and OTE systems in series. Approximately 13,000 gal of LLLW was processed during this run. The percent solids in the feed as a function of time for the tenth run is presented in Figure 5. As can be seen, it was much more difficult to maintain the cone in MVST 26 during the early part of run 10 than in the previous run. It required ~72 h of operation to stabilize the cone after it had been formed. During this 72-h period, the solids in the feed decreased from ~10 to ~0.6%. The percent solids in the feed then remained below ~1% for ~4 days. Then the cone began to break up, introducing more solids into the SLS feed. On April 10, the cone again seemed to stabilize and the percent solids increased from ~1 to ~9% over an ~5-day period. When the solids content reached >9%, the feed to the SLS was shut off and the solids were rinsed from the system.

The filtrate flow rate as a function of time for run 10 is presented in Figure 6. As can be seen, the filtrate production rate typically operated in the ~1- to 2-gal/min range for the entire operational run. This filtrate production rate was typical of the rate seen at the end of run 9, indicating filtrate production may have reached a steady-state level for this system.

Since treatment of underground storage tanks at the Department of Energy facilities typically involves the transfer of radioactive material, it is critically important for the pipeline not to become plugged during these transfers. To reduce such risks, the relevant properties of the slurry (e.g., density, suspended solids concentration, viscosity, and particle size distribution) should be determined within acceptable limits prior to transfer. These properties should then be continuously monitored and controlled within specified limits while the transfer is in progress. One of the highest priorities is to determine the concentration of suspended solids in the slurries. During WTP runs 9 and 10, two Coriolis meters were used simultaneously to create a suspended solids monitoring system that would provide accurate results with high precision. One Coriolis meter was used to measure the density of the slurry, while the other meter was used to measure the density of the carrier fluid (i.e., the filtrate from the cross-flow filter elements after the solids had been removed). The suspended solids concentration was then calculated from the density relationships between the slurry, the carrier fluid, and the dry solid particles. The dry solids density was determined by laboratory analysis and was assumed to be constant throughout the periods that grab samples were collected. Grab samples were collected and analyzed to verify the results obtained with the dual Coriolis meter system. The results showed that the concentrations of suspended solids as reported by the dual Coriolis meter system tended to be slightly higher than those obtained from laboratory analysis. The standard deviation of the suspended solids concentration determined with the dual instruments was 0.08%. The precision (or repeatability) for the Coriolis meters was very good, with each meter having a standard deviation of $\leq$0.0005 g/mL for the density. These results are quite good when one considers that the densities of the slurries were 0.01 to 0.05 g/mL greater than those of the filtrates. A report detailing the results of the dual Coriolis meter system has been prepared by Hylton.[5]

SUMMARY

The WTP consists of three operational systems: the CsR, OTE, and the SLS systems. These treatment systems are designed to reduce the volume and radioactivity of LLLW stored in the MVSTs and can be operated independently or in series in order to accomplish the treatment goals. All three systems are modular, skid-mounted systems that are self-contained, individually shielded, and designed to be decontaminated and removed once the project is complete. The CsR and OTE systems are installed inside Building 7877, and the SLS system is installed adjacent to the east side of the MVST 7830 vault cover.

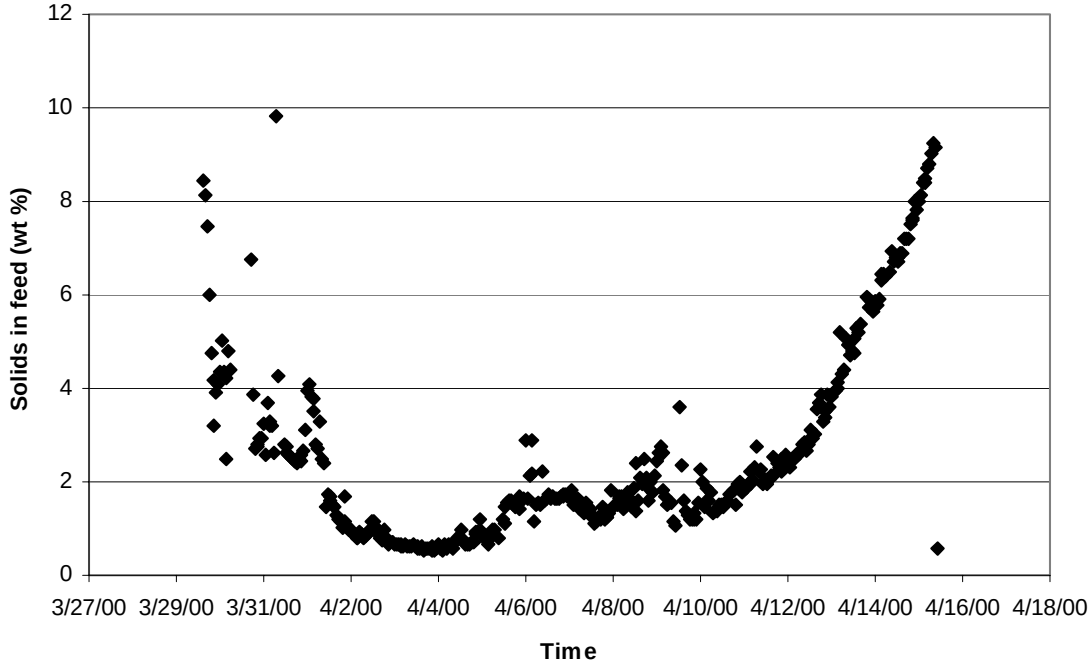

Fig. 5. Weight percent solids in the SLS feed as a function of time for run 10.

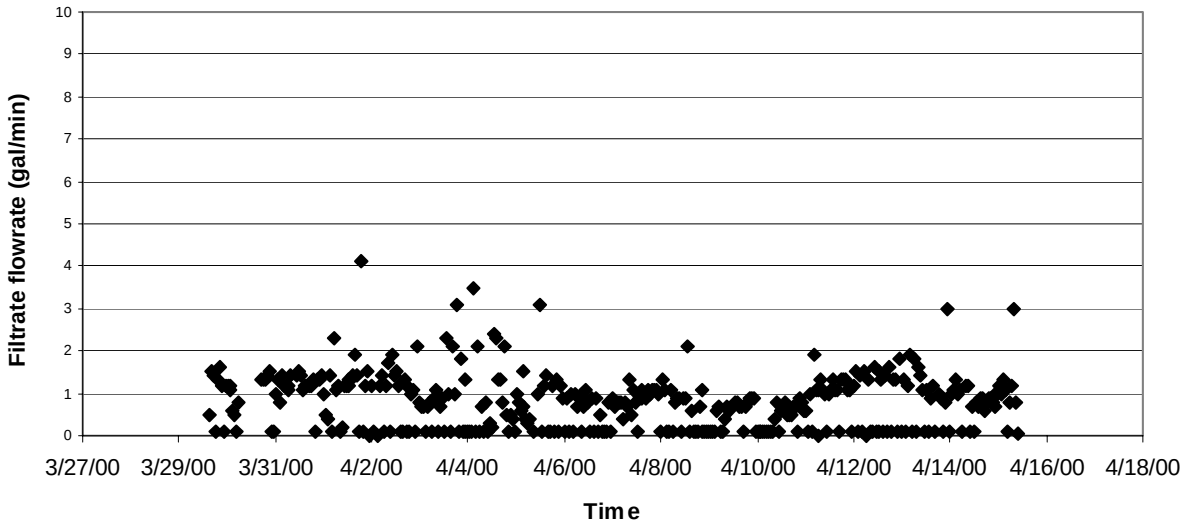

Fig. 6. Filtrate flow as a function of time for run 10.

Ten WTP runs were completed during FYs 1999 and 2000. During this period, a total of ~185,000 gal of LLLW was processed, ~7700 Ci of ^{137}Cs was removed from the radioactive supernate and concentrated on a CST ion-exchange sorbent, and ~75,000 gal of distillate was evaporated from the supernate and transferred to the ORNL Process Waste Treatment Plant. The ion-exchange material removed the vast majority of ^{137}Cs from the supernate that was processed. The data indicate that >98% of the cesium was removed from the supernate and that an average decontamination factor (C_0/C) of $\sim 6 \times 10^6$ was achieved for ^{137}Cs. Also, the distillate from the OTE operations met the ^{137}Cs WAC for the ORNL Process Waste Treatment Plant, which was 400 Bq/L, and the volume of supernate evaporated from the storage tanks freed up critically needed capacity, which allowed operation of ongoing processes at ORNL to continue.

Four of the ten WTP runs included the SLS system, and ~67,000 gal of LLLW was processed through the SLS systems during these runs. The use of the SLS system removed the bottleneck of having to settle the solids in the storage tanks for several weeks and then decant the liquid above the solids before being processed by the CsR and/or OTE systems. The SLS exceeded the minimum filtrate production rate of 1 gal/min, which was necessary to meet the design feed rates for the CsR and OTE systems.

During FY 2000 operations, two Coriolis meters were used simultaneously to create a suspended solids monitoring system that would provide accurate results with high precision. One Coriolis meter was used to measure the density of the slurry, while the other meter was used to measure the density of the carrier fluid (i.e., the filtrate from the cross-flow filter elements after the solids had been removed). The suspended solids concentration was then calculated from the density relationships between the slurry, the carrier fluid, and the dry solid particles. The dry solids density was determined by laboratory analysis and was assumed to be constant throughout the periods that grab samples were collected. Grab samples were collected and analyzed to verify the results obtained with the dual Coriolis meter system. The results showed that the concentrations of suspended solids as reported by the dual Coriolis meter system tended to be slightly higher than those obtained from laboratory analysis. The standard deviation of the suspended solids concentration determined with the dual instruments was 0.08%. The precision (or repeatability) for the Coriolis meters was very good, with each meter having a standard deviation of ≤ 0.0005 g/mL for the density. These results are quite good when one considers that the densities of the slurries were 0.01 to 0.05 g/mL greater than those of the filtrates.

REFERENCES

1. A. J. LUCERO et al., *Out-of-Tank Evaporator Demonstration: Final Report*, ORNL/TM-13501, February 1998.

2. J. F. WALKER et al., *Cesium Removal Demonstration Utilizing Crystalline Silicotitanate Sorbent for Processing Melton Valley Storage Tank Supernate: Final Report*, ORNL/TM-13503, March 1998.

3. T. E. KENT, J. H. WILSON, J. R. FARMER, *Development and Deployment of a Full-Scale Cross-Flow Filtration System for Treatment of Liquid Low-Level Waste at Oak Ridge National Laboratory*, ORNL/TM-2000/27 (in preparation).

4. J. F. WALKER, Jr., T. E. KENT, *Wastewater Triad Project Solid-Liquid Separator FY-2000 Deployment*, ORNL/TM-2000/186 (in preparation).

5. T. D. HYLTON, *An Evaluation of a Dual Coriolis Meter System for On-Line Monitoring of Suspended Solids Concentrations in Radioactive Slurries*, ORNL/TM-2000/184, September 2000.