Depleted Uranium Dioxide-Steel Cermet Spent-Nuclear-Fuel Waste Package

Charles Forsberg

Oak Ridge National Laboratory
P.O. Box 2008; Oak Ridge, TN 37831-6180
Tel: (865) 574-6783; Email: forsbergcw@ornl.gov

Presentation For
DOE Metals Recycle Taskforce
Oak Ridge, Tennessee
August 7-11, 2000

The submitted manuscript has been authored by a contractor of the U.S. Government under contract DE- AC05- 00OR22725. Accordingly, the U.S. Government retains a nonexclusive, royalty- free license to publish or reproduce the published form of this contribution, or allow others to do so, for U.S. Government purposes.

PROGRAMATIC HISTORY: THE UNITED STATES HAS EXCESS DEPLETED URANIUM

- DOE-NE is responsible for management of depleted uranium (DU) from enrichment plants
- About 400,000 tons of DU are in storage
- ORNL (C. Forsberg) is investigating repository uses of DU
  - Fill applications identified in 1996
  - Cermet applications identified in March 2000

A *CERMET* IS A *CERAMIC-METAL* COMPOSITE MATERIAL

- Ceramic and metal are separate phases
- Properties between ceramics and metals
- Large quantities of some cermets are produced (>10^5 tons/year)
- A cermet for this application includes:
  - Ceramic: depleted uranium dioxide (DUO_2)
  - Metal: steel (the continuous phase that is 35–50 vol % of the cermet)

ORNL DWG 2000-211

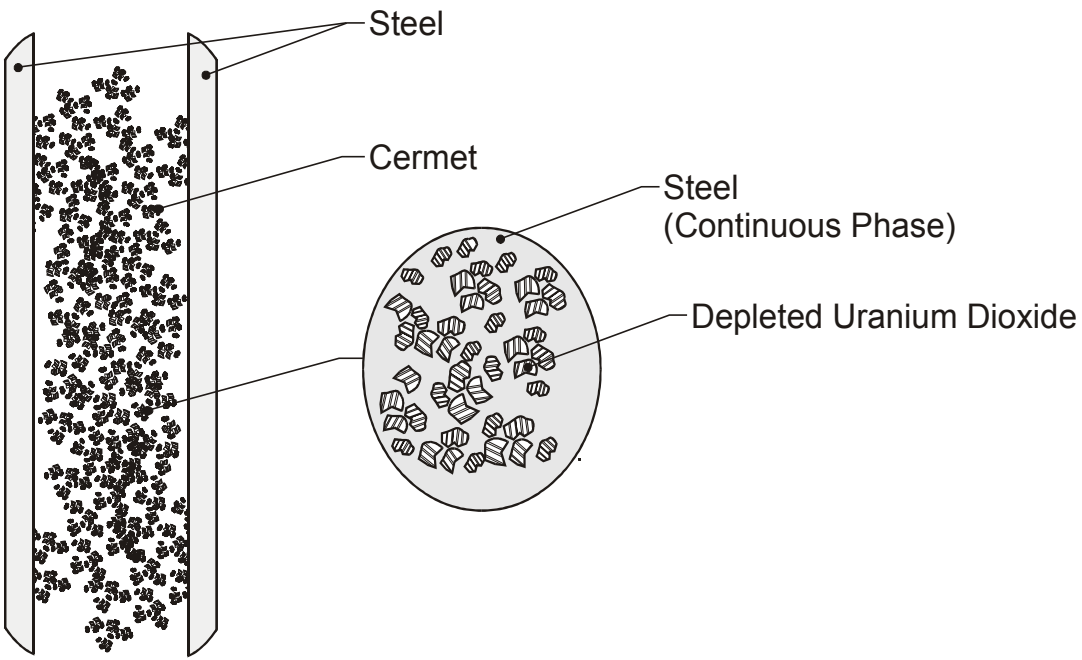

CERMET is a *CER*amic *MET*allic Composite

ORNL DWG 2000-212

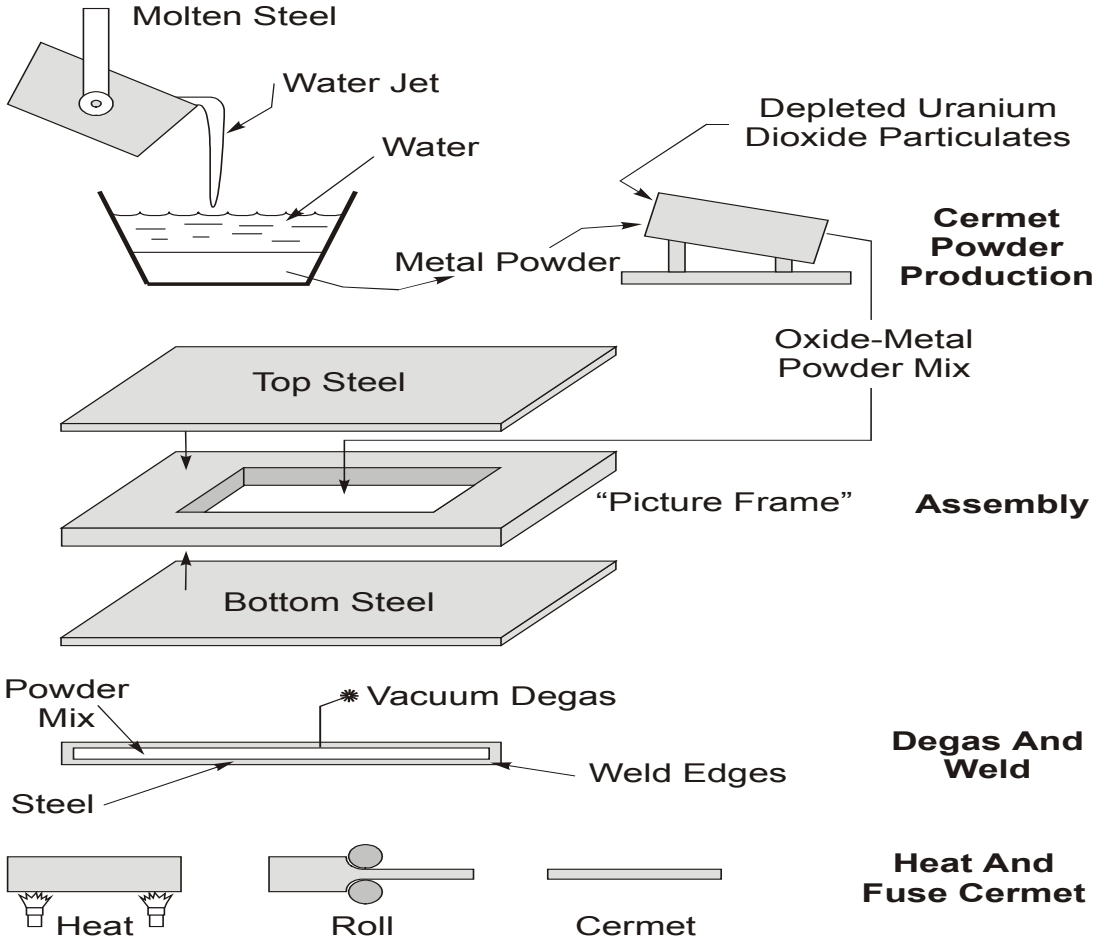

Example Method for Cermet Production

SPENT NUCLEAR FUEL (SNF) IS DISPOSED OF IN A REPOSITORY IN A WASTE PACKAGE (WP)

- **WP Functional Requirements**
  - Handling package for SNF
  - Corrosion-resistant layer to prevent groundwater transport of radionuclides
  - Ensure nuclear criticality control
- **WP Characteristics**
  - Heavy (25–100+ tons)
  - Steel container with corrosion-resistant layers
  - About 10,000 WPs will be required

ORNL DWG 2000-210

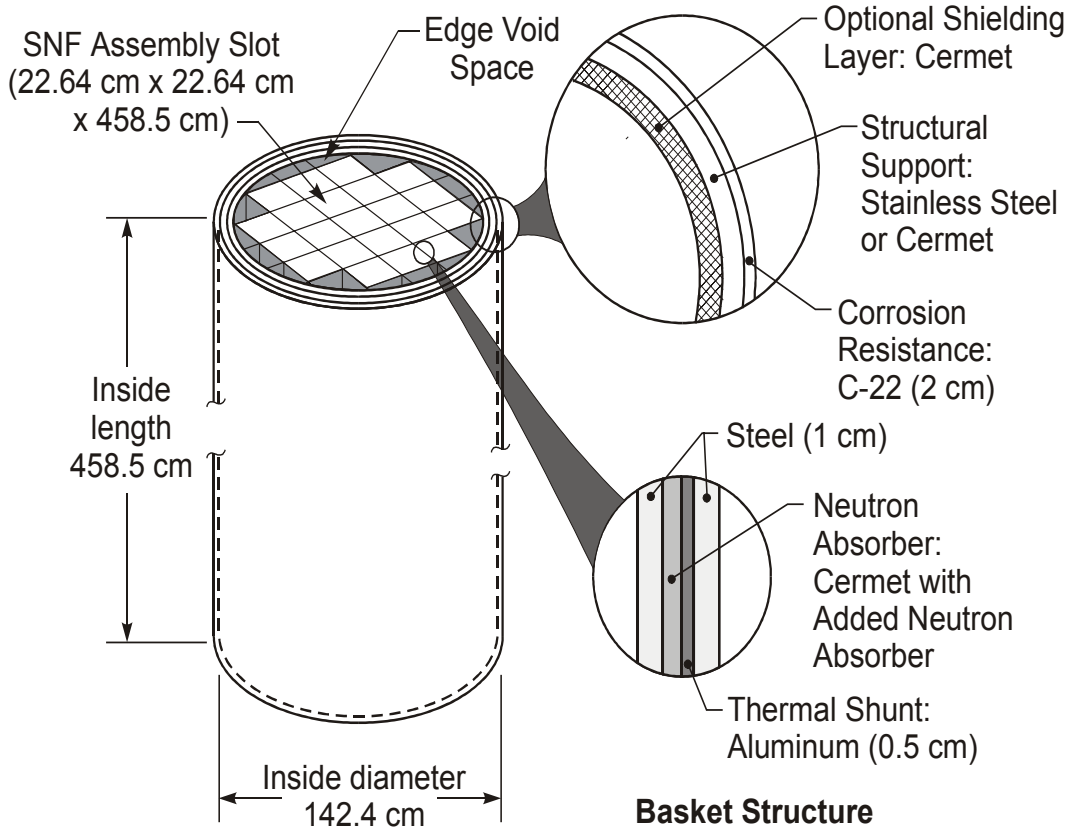

Uses of Cermet in PWR Fuel Assembly Waste Package

REPOSITORY PERFORMANCE MAY BE IMPOVED WITH WP DUO_2

- DUO_2 lowers the risks of long-term nuclear criticality by reducing the average ^{235}U enrichment levels in the WP
- DUO_2 and steel create chemically reducing conditions in the WP that slow SNF degradation and radionuclide releases
- Oxidation of DUO_2 creates oxides that absorb radionuclides from groundwater

A DUO_2-STEEL CERMET IS COMPATIBLE WITH THE WP

- Chemical compatibility is required
  - Cermet steel is compatible with a steel WP
  - DUO_2 is the same chemical form as is SNF UO_2
- A cermet changes DUO_2 properties
  - Adds mechanical strength
  - Provides contamination control
- A cermet allows a single material to meet multiple functional requirements

A CERMET WP COULD CONSUME LARGE QUANTITIES OF RECYCLE STEEL

- The Yucca Mountain (YM) repository will require ~10,000 WPs
- WP gross weights may vary from 42 (current baseline) to 100+ tons
  - Alternative designs have different weights
  - Different programmatic viewpoints about the preferred WP (self-shielded?)
- Potential demand for recycled steel is between 50,000 and 500,000 tons

REQUIRED CERMET ACTIVITIES FOR CREATING A CERMET WP OPTION

- Define repository requirements, evaluate production routes, and estimate economics
- Prepare and test cermets using alternative production techniques (cost vs performance)
- Refine best production technique
- Effect technology transfer

THE PATH FORWARD REQUIRES AGREEMENT AND SUPPORT OF MULTIPLE DOE PROGRAMS

- **Metals recycle program**
- ***Yucca Mountain Project (Repository)***
- **Depleted uranium program**
- **DOE SNF program (for DOE SNF—separate and distinct from YM)**