PRACTICAL DESIGN AND MANUFACTURING OF CRYOGENIC HIGH CURRENT LEADS

V. I. Datskov,[1] V. Bartenev,[1] and J. A. Demko[2]

[1]Laboratory of High Energies
Joint Institute of Nuclear Research
Dubna, Moscow Region, Russia
[2]Oak Ridge National Laboratory
P.O. Box 2009, Oak Ridge, TN 37831, USA

ABSTRACT

High current leads are required in many large superconducting magnet facilities and will be required for high-temperature superconductor power applications. Several important factors must be selected in order to design high current leads that include the choice of conductor properties and lead geometry (length, cross section, cooling surface area). The application of a mathematical model and optimization for a 13-kA lead design between liquid helium and room temperatures are discussed. A design and manufacturing technology for current leads with specific heat leak near 1 W/kA in forced-cooled mode are also described. The principles of selection of the current-carrying element material, geometric sizes, and their influence on the heat leak from the current leads are explained. Measurements of the typical copper residual resistivity ratio found at different locations of welded samples taken from prototype current leads are presented. These measurements provide direction in choice of material properties used in modeling a current lead design. Different modes of cooling the current leads, such as vapor cooled and forced-flow cooled, are considered. A comparison between some existing current lead designs is discussed.

INTRODUCTION

Cryogenic electrical devices may require that electric current, ranging to several thousand amperes, be brought into the cold region of the cryostat. Heat losses through the

current leads are then of great importance. It is therefore necessary to find the optimum design for the leads, which would provide a minimum heat flow into the cold region or minimize the refrigeration, required to operate the leads. There are two main contributions of heat load from leads: thermal conduction and the dissipation of joule heat. For vapor or forced-flow-cooled current leads, the first component depends mostly on the quality of the heat exchanger of the current-carrying conductor and on the ratio of the current-carrying conductor length to its cross section. The second component depends also on the quality of the current-carrying conductor material. The actual heat load of a current lead can be determined in the vapor-cooled mode only by measuring the flow of helium gas.

ANALYSIS OF THE EXISTING DESIGNS OF CURRENT LEADS

Analysis of current leads can be accomplished with a one-dimensional energy balance for the conductor and the cooling flow as given in Eqs. (1) and (2). In these equations, γ is the density, λ is the thermal conductivity, C is the specific heat, A is the cross-sectional area, h is the convective heat transfer coefficient, P is the heat transfer surface area per unit length, e_v is the vapor enthalpy, and ρ is the resistivity of the conductor. The subscripts c and v stand for the conductor and vapor, respectively.

$$\frac{f(\gamma_c A_c C_c T_c)}{f\tau} = \frac{f}{fx}(\lambda_c A_C \frac{fT_c}{fx}) + \frac{\rho I^2}{A_C} + hP(T_c - T_v) \,. \tag{1}$$

$$\frac{f(\gamma_v C_v T_v)}{f\tau} = \dot{m}_v \frac{fe_v}{fx} + hP(T_v - T_c) \quad . \tag{2}$$

The current-carrying conductors of the current leads have been made from ribbed pivots, strips, pipes and small-diameter wires, woven to bunches. The current leads with current-carrying conductors from ribbed pivots are described in Refs. 1–3. Defining a specific cooling surface as the ratio of the cooling surface area per unit length, or perimeter, to the current-carrying cross section, these lead designs have a specific cooling surface of 1 cm^2/cm^3 to 2 cm^2/cm^3. It is practically impossible to increase this value because the

current passes through the box walls, and the hard-secured shields are used as the heat exchanger surface. The performance of these current leads does not change for time periods over 10 years.

At the present time, there are many articles devoted to combined current leads, that is, current leads with the low-temperature section made of a high-temperature superconductor.[11–13] High-temperature superconductors are commonly made into tapes or in bulk form as tubes or rods. A current conductor from metal, copper, or stainless steel may be connected in parallel across superconductor sections to assure mechanical strength and help protect the HTS sections during fault currents. This decreases the benefits realized from the HTS section during operation at design conditions.

The refrigeration power consumed for cooling the heat influx of the conventional design[10] and that for a design using a silver alloy sheathed tape HTS section[12] is practically the same per kiloampere. Since most HTS materials are ceramic, combined current leads do not withstand current overloads or cooling loss as well as all copper constructions and may fracture during this kind of event. The advantages and disadvantages of these current leads are described in detail in Ref. 13.

PRACTICAL DESIGN AND MANUFACTURE OF CURRENT LEADS

The design of current leads is in practice reduced to the selection and optimization of geometrical features. The construction of the current lead with a current-carrying conductor from welded copper strips and shields, described in Ref. 10, is taken as a basis. For many situations, the minimum perimeter may be taken as 50 cm^2/cm^3 of current-carrying cross section. The effective heat exchanger of the current-carrying conductor with a specific cooling surface based on the first criterion permits a current density of 80–100 A/mm^2 in the cold region.[8] The cross section of the current-carrying conductor in the cold region has to be minimum because it determines the thermal conductance, that is, the product of the thermal conductivity and cross-sectional area. Figure 1 presents the dependence of the thermal conductance on the cross section of the current-carrying conductor for the heat exchanger design of Ref. 10 and a current-carrying conductor length of 600–800 mm in the force-cooled mode.

The distribution of temperatures, shown in Fig. 2, along a current lead of this design is taken from Ref. 14. The temperatures for the forced-cooled mode are lower than those for the vapor-cooled mode. In the vapor-cooled mode, the mass flow is determined by the heat leak into the liquid vaporizing the helium gas that is used to cool the lead. In the forced-cooled mode, the flow can be set by throttling the gas with a valve at the discharge from the

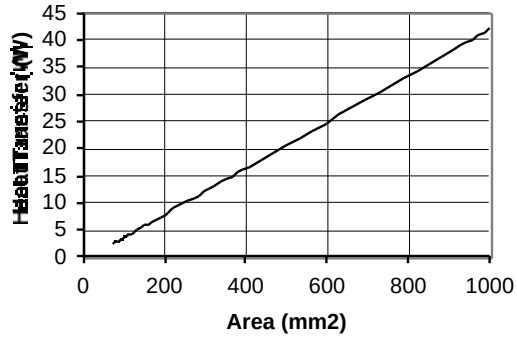

Figure 1. The dependence of the heat influx by conduction heat transfer along the current lead conductor cross section for the heat exchanger design[10] in the force-cooled mode.

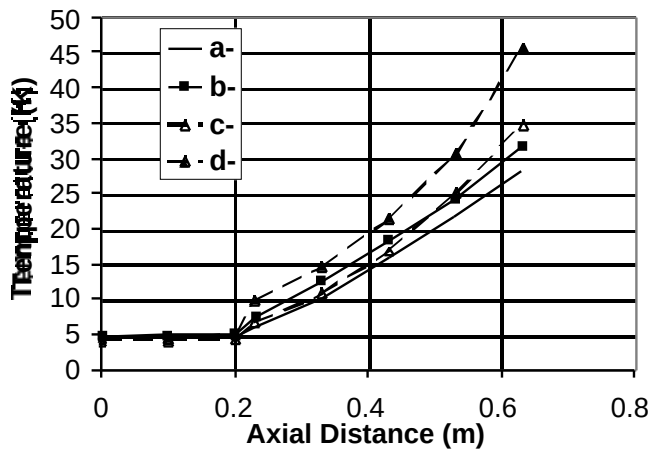

Figure 2. The temperature distribution along the current lead in different kinds of operations: (1) Force-cooled mode, a—temperatures at zero current and b—temperatures at 5 kA; (2) Vapor-cooled mode, c—temperatures at zero current and d—temperatures at 5 kA.

current lead. The current changes the temperature field in the cold region of the current-carrying conductor less than in the warm end, as shown in Fig. 2. In the force-cooled mode, the current lead operates at a nominal current at the mass flow rate through the lead of 0.049 g/s/kA, corresponding to a specific heat leak of 1 W/kA (Ref. 10). The length of the current-carrying conductor has a small influence on the current lead heat leak because the temperature field is practically the same in the cold region of the current-carrying conductor. To a large extent, the length of the current lead operating in the nominal mode determines the temperature of the warm end of the current lead. The length of the current lead, operating at a constant current, can be chosen assuming the warm end temperature is the same as the surroundings as an initial assumption. Increasing the current lead length directly increases to the cost of the current lead cryostat.

The copper used in the current-carrying conductor can be obtained from commercial sources with a residual resistivity ratio (RRR) = 30–50. The thermal conductivity of commercial and high-purity copper with RRR = 1800–2000 is practically the same in a temperature region of 50–295 K. The RRR was measured on a sample cut from a 6-kA lead of the design in Ref. 10 using a four-wire method. The measured RRRs of the plate and the

weld region were 30 and 114, respectively. This demonstrates the effect of the weld on the material properties. Table 1 shows results from an analytical optimization of a

Table 1. Comparison of shape factor and heat load for conduction-cooled lead

RRR	IL/A (A/cm)	QI (W/A)
20	40200	0.044
40	46300	0.044
100	56100	0.044
1000	100400	0.043

conduction-cooled lead as discussed in McFee.[15] The trend is assumed valid for cooled leads and shows that the heat load per kiloampere is not very sensitive to the RRR but that the shape factor, hence the length-to-area ratio, varies significantly. The use of high-purity copper leads to very long, thin leads and to a higher cost of the current lead.

Currents leads, rated at a short-time operation to 8 kA, were manufactured as safety current leads based on the design described in Ref. 10, with a low heat load to the cryostat. The upper part of the current lead in a temperature region of 300–50 K is made of copper, and its cross-sectional area is 160 mm. In the lower part, located in a temperature region of 30 to 4.5 K, the copper strips are replaced with stainless steel, and the copper cross section is 40–45 mm^2. The static heat leak in the cryostat was 0.8 W per lead in the force-cooled mode and 0.45 W per lead in the vapor-cooled mode. The operating conditions were to apply a current of up to 8 kA for 4–5 s, then the current was turned off for 1–2 s. The current must be only off for a short time from the magnet system. A small jump in temperature was observed approximately in the middle of the insertion from low thermal conductivity material. Before applying current, a mass flow rate lead of 0.039 g/s, corresponding to a static heat leak of 0.8 W through the lead, was set. The operation of the current leads was stable in the vapor-cooled mode with a specific heat leak of 0.8 W/kA at 2.4 kA, which corresponds to the amount of copper (40–45 mm^2) in the lower part of the current lead.

At the present time, the magnets of superconducting accelerators[16] and large magnet systems,[17] placed in vacuum, are cooled by the force-cooled mode. Forced-cooled operation simplifies significantly the design of the magnet system and does not depend on orientation of the current lead (horizontal or vertical). Current lead operation in the force-cooled mode is described in Ref. 10. The helium supplied to the current lead is single phase by evaporating it just before entering the current lead. On cooling the current lead with single-phase helium (4.2 K), the static heat leak of the current lead may be determined by the flow rate of helium using the latent heat of liquid helium. When operating in the immersed mode, that is, when the cold end of the current lead is in liquid helium, one can operate with a lower helium flow through the lead. For a 6-kA current lead, the helium flow through the lead was decreased up to 50%, and the current lead operated in a stable mode with an apparent specific heat leak of 0.53 W/kA at 6 kA. A significant portion of the heat leak through the lead is taken out by evaporating the liquid helium.[14]

A typical superconducting magnet system consists of a superconducting magnet, current leads, and superconducting connecting cables. Figure 3 is a simplified schematic diagram of the electrical connections of the current lead with a magnet and helium cooling flow to the current lead. A more detailed schematic diagram of the electric and helium connections of the Nuclotron magnet-cryostat units is shown in Ref. 16.

The superconducting cable length, which connects the magnet and the current lead in the Nuclotron, is 1.8 m to 2 m long. In this connection, the long superconducting cable and two solder joints produce an extra heat influx to the current lead. This heat influx depends on the quality of the superconducting cable, the quality of solder joints. The superconducting cable, connecting the magnet and the current lead, is the weakest link in the magnet system. When the superconducting system transitions to the normal state, the current must be turned off for a short time, for example, in the Nuclotron for 50 ms, or the connecting superconducting cable must be protected from burning. The overheating stability of the current lead under cooling loss can be prevented only with a copper bus in parallel with the superconductor between the current leads at the cold end. Without the parallel copper bus, the connecting superconducting cable burns up on cooling loss through the current lead when operating in the vapor-cooled mode[1,14] or in the

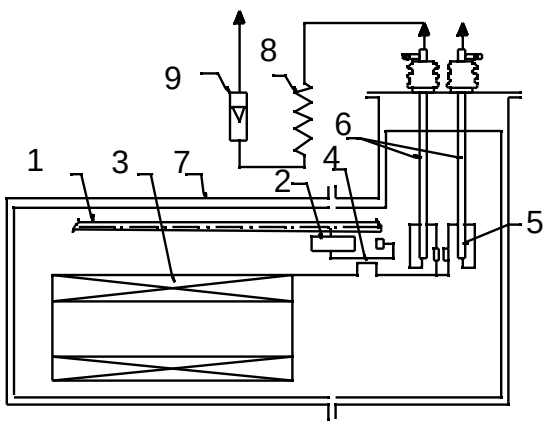

Figure 3. A schematic diagram of the electric and helium communications of the current lead with a magnet: 1—supply header, 2—insulating bushing, 3—superconducting magnet, 4—solder joint between superconductor cables, 5—solder joint between the superconductor cable and the current lead, 6—current lead, 7—cryostat, 8—heater, 9—flowmeter.

force-cooled mode. In large magnet systems with a slow current load-off, the cold ends of the current leads are connected to a copper stabilized superconductor cold bus.[18] The current lead allows a 40–50% overload at a corresponding addition of the mass flow rate through the lead. The Nuclotron current leads, designed for steady operation at 6.2 kA, have been operated for magnet testing at currents of up to 9.8 kA. Because the current leads operated at higher than optimum currents, the mass flow rate through the leads was increased from 1.6 g/s to 1.8 g/s so that the current leads might not cause the magnet to transition to the normal state.

The current lead-design parameters that meet the above-described conditions are shown in Table 2 for a 13-kA current lead. An analysis of this lead configuration following the procedures in Ref. 19 was conducted. The optimum operating flow, based on minimizing the Carnot refrigeration power, was at the minimum flow of 0.625 g/s for the 13-kA operating condition and around 0.1 g/s for the 0-kA operating condition. The temperature profiles for these two operating conditions are given in Fig. 4. The estimated heat load and top end temperatures are given in Fig 5. Using the experimentally determined overall heat transfer coefficient from Ref. 19, it is seen that the predicted operating temperatures of the lead should be at or above 250 K.

Table 2. Design parameters for force-cooled mode, current-carrying, copper-welded conductor

Description	Size
Length of the current-carrying conductor	1.0 m
Current carrying cross section, upper part	0.00075 m^2
Current carrying cross section, lower part	0.00017 m^2
Mass flow rate through the lead	0.65 g/s
Specific heat leak per lead	<1 W/kA
Hydraulic resistance	10–12 kPa
Warm end temperature	>250 K

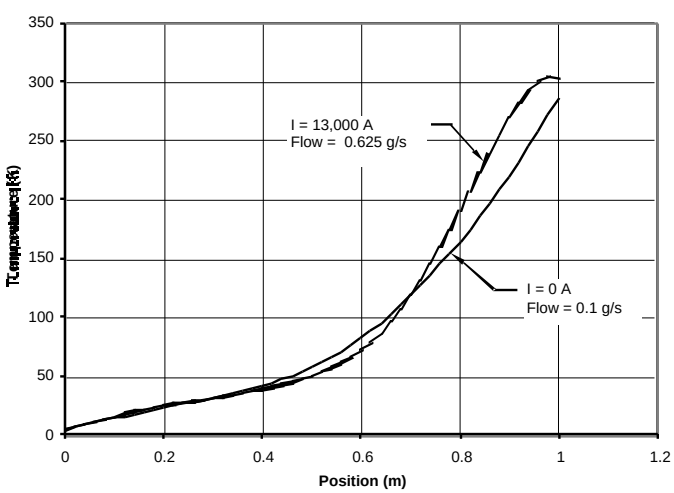

Figure 4. Calculated temperature distribution for 13,000-A current lead at different operating currents.

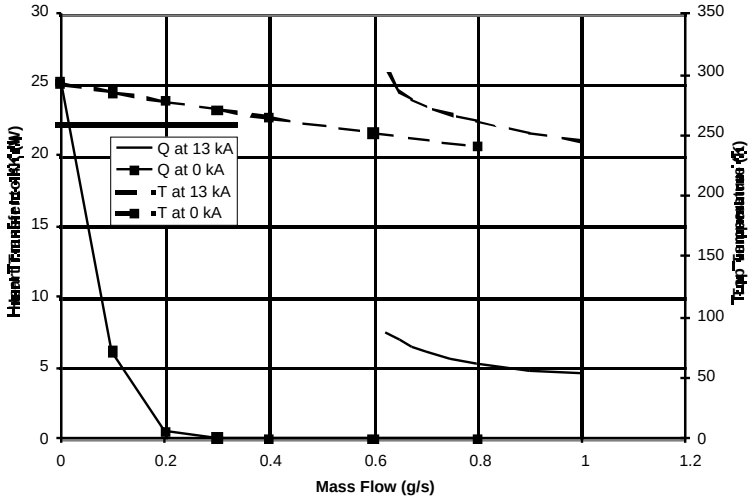

Figure 5. Calculated heat load and top end temperature for a two-stage, 13-kA, forced-cooled current lead at different cooling flow rates. CONCLUSIONS

CONCLUSIONS

According to Ref. 10, manufactured current leads of the box conductor design operate with a specific heat leak of 1 W/kA in the vapor-cooled mode. They are compact and reliable in operation. The actual current lead heat influx is best determined in the vapor-cooled mode. For the design of current leads, the proper selection of the main geometric features (length, cross section, and heat transfer surface area) must be accomplished. Some useful guidelines have been discussed based on previous design experiences.

ACKNOWLEDGMENTS

The author thanks Yu. A. Shishov for useful consultations and discussions regarding the problems considered in the review. Research is partially sponsored by the Office of Energy Efficiency and Renewable Energy, U.S. Department of Energy under contract DE-AC05-96OR22464 with Lockheed Martin Energy Research Corp.

REFERENCES

1. V. E. Keilin and I. A. Kovalev, Electrical leads up to 10 kA for the superconductor magnet system, *Prib. Tekh. Eksp*. 6:178 (1974).
2. H. Katheder and L. Shappals, Design and test of a 10-kA gas cooled current lead for superconducting magnets, *IEEE Transactions on Magnetics*, V.MAG-17, 15:2071–2074 (1981).
3. K. Maehata, S. Kawasaki, K. Ishibashi, Y. Wakuta, H. Kawamata, and T. Shintomi, Operational performance of spiral-fin current leads, *Cryogenics* 33:680 (1993).
4. D. Leroy and D. Oberli, "18 kA vapor-cooled current leads using a stack of copper finned foils," Proc. Twelfth Int. Cryo. Eng. Conf., Southampton, U.K. (1988), p. 237.
5. J. W. Lue, W. A. Fietz, R. E. Stamps, G. R. Zahn, and J. R. Miller, "Test results of the vapor-cooled leads for the JFSMTF," *Adv. Cryo. Eng*. 31:217 (1986).
6. D. Hagedorn et al., "18 kA vapor-cooled current leads to test superconducting magnet models for the proposed large hadron collider at CERN using wire mesh heat exchangers," Proc. Twelfth Int. Cryo. Eng. Conf., Southampton, U.K. (1988), p. 242.
7. E. Tada et al., "Development of 30 kA vapor-cooled current leads for fusion devices," Proc. Eleventh Int. Cryo. Eng. Conf., Berlin-West, Germany (1986), p. 528.
8. E. I. Mikulin and Yu. A. Shevich, Matrix heat exchange devices, Moscow, Engineering Industry, 1983.
9. V. D. Bartenev, The force-cooled 2.5 kA current leads for force-cooled superconducting magnets of the Nuclotron, Preprint *JINR*, Dubna (1990).
10. V. D. Bartenev and Y. A. Shishov, Force-cooled current leads for the force-cooled superconducting magnets of the Nuclotron, *Cryogenics* 31:985 (1991).
11. R. C. Niemann, Y. S. Cha, J. R. Hull, C. M. Rey, and K. D. Dixon, "Design of a high-temperature superconductor current lead for electric utility SMES," *IEEE Trans. Appl. Supercond.* 5:789 (1995).
12. R. Heller and J. R. Hull, "Conceptual design of a 20 kA current leads using force-flow cooling and Ag-alloy-sheathed Bi-2233 high-temperature superconductors," *IEEE Trans. Appl. Supercond*. 5:797 (1995).
13. A. Ballarino and A. Ijspeert, "Expected advantages and disadvantages of high-Tc current leads for the large hadron collider orbit correctors," *Adv. Cryo. Eng*. 39:1959 (1994).
14. V. D. Bartenev, Operation of current leads at different kinds of cooling, Preprint *JINR*, Dubna (1995).
15. R. McFee, "Optimum Input Leads for Cryogenic Apparatus," *Rev. Sci. Instr*. 30(2) (1959).
16. H. G. Khodzhibagiyan and A. A. Smirnov, "The concept of a superconducting magnet system for the Nuclotron," Proc. Twelfth Int. Cryo. Eng. Conf., Southampton, U.K. (1988), p. 841.
17. H. Desportes, I. Le Bars, and G. Mayaux, Construction and test of the CELLO thin-wall solenoid, *Adv. Cryo. Eng*. 25:175 (1980).
18.