Investigation of High Voltage Breakdown and Arc Localization in RF Structures*

R. H. Goulding, T. S. Bigelow, D. W. Swain

Oak Ridge National Laboratory, PO Box 2009, Oak Ridge, TN, USA, 37831-8071

Abstract. An effort is underway to improve the voltage standoff capabilities of ion cyclotron range of frequencies (ICRF) heating and current drive systems. One approach is to develop techniques for determining the location of an electrical breakdown (arc) when it occurs. A technique is described which uses a measurement of the reflection coefficient of a swept frequency signal to determine the arc location. The technique has several advantages including a requirement for only a small number of sensors and very simple data interpretation. In addition a test stand is described which will be used for studies of rf arc behavior. The device uses a quarter-wave resonator to produce voltages to 90 kV in the frequency range of 55-80 MHz.

INTRODUCTION

A major goal of technology development programs in the area of ICRF heating and current drive is to increase power handling capability of the launchers and power transmission systems. Present day high confinement tokamak plasmas often have steep edge density gradients and large gaps between the plasma and outer wall, producing low values of antenna loading which limit the power that can be coupled to the plasma to substantially less than the power available. It is also desirable for future devices to increase the injected power density above the current typical values of 3 to 8 MW/m^2 in order to minimize the wall area taken up by ICRF launchers.

Power handling can be limited by fast loading transients (1), or by high local heat fluxes caused by edge plasma interactions with the antenna-generated radiofrequency (rf) electric fields (2). However, it is most often limited by electrical breakdown (arcing) occurring in the ICRF antennas themselves, or in the transmission lines that carry power to them. If the voltage limits in these structures can be increased, then power handling can in many cases be improved. Two approaches that are being undertaken in our work are the development of arc localization techniques to determine where breakdown occurs when a voltage limit is reached, and a basic study of rf arcs in simple geometries to gain an improved understanding of the variables involved. In this paper we discuss modeling results for a proposed arc localization technique and present a design for a device for rf arc studies.

* Oak Ridge National Laboratory, managed by Lockheed Martin Energy Research Corp. for the U.S. Department of Energy under contract number DE-AC05-96OR22464.

ARC LOCALIZATION

Development of techniques for arc localization becomes especially important as the complexity of ICRF antenna feed networks increases (3). In order for a technique to be useful, it should fulfill several requirements:

1. Components used should not themselves degrade the voltage standoff capability of the transmission line/antenna system.
2. The number of sensors used should be minimized in order to reduce cabling and data acquisition requirements.
3. Use of high cost diagnostic equipment such as network analyzers should be avoided in systems intended for everyday use during normal operations.
4. The technique should be adaptable to complicated feed and antenna configurations

It is likely that no single technique will fulfill all of these requirements, and instead a combination of techniques may be needed in order to localize arcs throughout a particular system. For instance, it would be difficult to use optical sensors providing complete coverage over 16 transmission lines which are each more than 80 m long, such as is the case for the JET ICRF system. However, it may be possible to use an rf based technique to cover most of the system, and use optical sensors near a small number of trouble spots such as vacuum windows.

A technique likely to at least partially meet the above requirements involves the introduction of a low power (~ 1-10 W) swept frequency signal in a frequency range far above the drive frequency but below the cutoff frequency for propagation of higher order modes in the coaxial transmission line. Assuming an arc presents a parallel impedance in the transmission line which is much lower than its characteristic impedance, then in principle it is possible to determine its approximate position to within an integer number of half wavelengths simply by measuring the reflection coefficient at a location between the matching network for the system and the arc itself. Measurement of the reflection coefficient at a second frequency can then remove the $n\lambda/2$ ambiguity. However, if the arc occurs at a position at which the transformed load impedance at the second frequency is low, then an accurate result will not be obtained. This limitation can be avoided by using a swept frequency rather than a fixed second frequency.

In our implementation the swept frequency signal is introduced through a coupler using a ridged waveguide which is cut off for the drive frequency (Fig. 1). Since the technique uses a reflection coefficient measurement, there is no problem with interference due to reflections on the generator side of the coupler; a simple non-directional voltage probe can be used to couple the signal into a standard coaxial tee connected to the main transmission line.

This technique has been modeled using the FDAC (4) code. This allowed a demonstration that its use is feasible in a moderately complex system featuring mutual coupling between transmission lines. However, the results obtained were very similar to those observed for a single antenna and transmission line. Figure 2 is a schematic of the modeled circuit. In the model, the swept frequency signal is introduced at the generator. The location of the arc and the directional couplers used to measure the reflection coefficient are also shown. Figure 3 shows the phase of the reflection coefficient as a function of frequency for an arc modeled as an

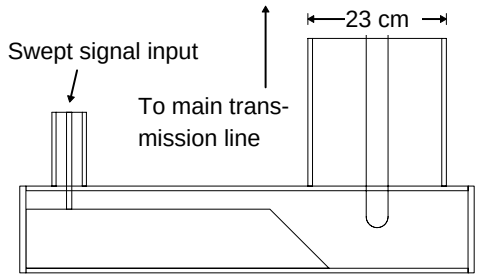

FIGURE 1. Conceptual design of coupler for swept frequency arc localization.

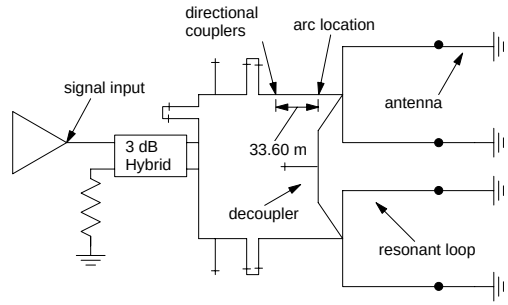

FIGURE 2. Schematic of circuit used to model swept frequency arc localization.

inductance of 3 nH in series with a resistance of 1 Ω and shunted across the transmission line at the location indicated. The frequencies were chosen to be below the ~ 590 MHz cutoff frequency of the first propagating higher order mode in 0.23 m (9 in.) diameter 50 Ω transmission line. If the complex reflection coefficient ρ is transformed back towards the arc by multiplying by $\exp(2j\beta l)$, then the minimum variation of the phase of $\rho' = \rho \exp(2j\beta l)$, is observed for a value of l = 33.65 m, which compares very well to the distance between the directional couplers and arc specified in the model of 33.60 m (Fig. 4). If an arc occurred in a resonant loop feeding an antenna, it would be difficult to determine its location from a reflection coefficient measurement at the indicated position of the directional couplers. However, it would be a simple matter to put additional directional couplers in the resonant loops themselves to overcome this problem.

It should be noted that according to the model, when the arc impedance at the swept frequency is high enough to become comparable in magnitude to the characteristic impedance of the transmission line, the high frequency wave is not well reflected by the arc. In the frequency range 450-500 MHz with 50 Ω line, this happens for an arc inductance of ~ 15 nH. In this case, the value of l determined using this method will correspond to a characteristic length of the system (such as the distance between the directional couplers and antenna grounds), and not the distance to the arc. An obvious solution is to use a lower frequency range for the swept signal, but it then becomes more difficult to isolate the drive power from the

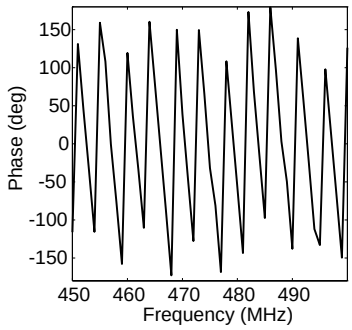

FIGURE 3. Phase of reflection coefficient at observation point as function of frequency.

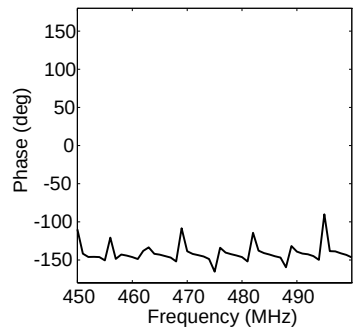

FIGURE 4. Phase of transformed reflection coefficient as function of frequency.

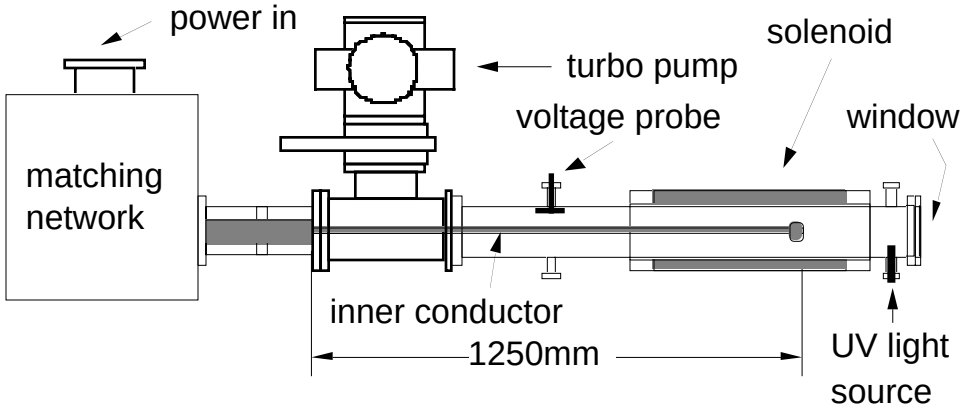

FIGURE 5. Basic arc studies test chamber

high frequency coupler input without degrading the voltage standoff capability of the system. In an upcoming experiment we will measure inductances of arcs created at various locations along gas filled and vacuum transmission lines in order to further evaluate the suitability of this technique.

RF ARC STUDIES

Figure 5 shows the design of a test chamber which will be built to examine the behavior of electrical breakdown at rf frequencies. Arcs will be produced in a region with well characterized electrode and magnetic field geometries. The main chamber consists of a quarter-wave coaxial resonator with a characteristic impedance of 130 Ω and an interchangeable electrode at the high voltage end. A capacitor L-match is used to allow operation between 55 and 80 MHz, with voltages up to 90 kV. A solenoidal magnet with a 14 cm dia. bore produces a nearly uniform magnetic field of up to 0.4 T for magnetic insulation tests, and electrodes of any desired configuration can be inserted, allowing for a comparison of arcing across gaps parallel and perpendicular to the field lines. Provisions have been made for introduction of gas and ultraviolet light to more closely simulate tokamak conditions. A window at the end of the device will allow arcs to be imaged using a charge coupled device (CCD) camera having exposure times down to 25 ns. The device will be used to explore the interdependent effects of gas and surface materials on voltage standoff, as well as effects of magnetic fields, electrode geometries, conditioning, and baking techniques.

REFERENCES

1. Kaye, A., "The JET Wideband Matching System," *AIP Conf. Proc.* 403, (Savannah, 1997), pp. 389-392.
2. Harris, J. H., et al., "*Journal of Nuclear Materials*", **241**, 511-516 (1997).
3. Ryan, P. M. et al., 2nd Europhysics Topical Conference on Radio Frequency Heating and Current Drive of Fusion Devices, in *EPS Conf. Abs.* 22A (Brussels, 1998) p. 97
4. Goulding, R. H., "Global ICRF System Designs for ITER and TPX,", *AIP Conf. Proc.* 355, (Palm Springs, 1995), pp. 397-400.