**Contribution to FPA Proceedings 1998**

# Near Term Applications of Plasma Science and Fusion Research - National Laboratory Perspectives

**D. Rasmussen*, K. Schoenberg**, R. Siemon**, S.J. Zweben*****

*** Oak Ridge National Laboratory, Oak Ridge, Tennessee**
**** Los Alamos National Laboratory, Los Alamos, New Mexico**
***** Princeton Plasma Physics Laboratory, Princeton, New Jersey 08540**

## Abstract

**This paper describes some of the near-term practical applications of plasma science from the perspective of National Laboratories involved with fusion research for many years. The first half of the paper presents suggestions for maintaining a healthy national program in this area. The second part of the paper gives specific examples of near-term plasma applications research at our laboratories.**

## 1. Overview of Near-Term Plasma Applications Research

**This paper brings together three talks on near-term applications of plasma science given at the Fusion Power Associates Annual Meeting in June 1998. These three presentations share a common perspective; namely, that of US National Laboratories which have long been committed to the fusion program, but which also are diversifying to develop near-term plasma applications research.**

**By "near-term applications" we mean those situations where plasma science can be applied to problems of immediate commercial importance involving new products or processes in a variety of industries. In Sec. 2 of this paper we present examples from the semi-conductor, chemicals, auto industry, etc. This application-oriented research differs in perspective and role from the "fusion industry" discussed at this meeting by Bill Ellis and John Davies, where their industrial companies are working as partners to the fusion research community for the long-term development of fusion.**

**These examples and numerous others [1,2] leave no question that plasma science has application to real-world problems. In fact, the variety of possibilities sometimes surprises the fusion community, where researchers have focused mainly on the formidable problems of fusion energy. There is a problem, however: how can funding be obtained to investigate these interesting and diverse areas of near-term application?**

### a) Background on roles of industry, government, and research institutions

**About ten years ago, the attention of policy makers and Congress became focused on US competitiveness in the world market place. A theme emerged that the "jewels of government funded research" should be made available to US industry, and it was correctly noticed that in comparison**

**with Europe or Japan, US research activities in universities and National Laboratories were quite insulated from the industrial research community and its interests. The Cooperative Research and Development Agreements (CRADAs) were created by legislators, and special programs to encourage stronger coupling between government sponsored research and industrial needs were started such as DOE's Technology Transfer Initiative and DOC's Advanced Technology Program.**

**Then the mood shifted with the Republican Congress of 1994, and these new programs were attacked as being "corporate welfare." Still, the door had been opened as never before between two previously insulated research cultures, and as discussed at this meeting by Pete Lyons of Senator Dominici's staff, legislators are still working to foster closer ties between industry and government-funded researchers. Exactly how this is best done remains a subject of ongoing debate.**

**b) A sustainable model for plasma applications research**

**Fig. 1 illustrates one model for sustainable interactions between industry, government and research institutions that has been found useful at the National Laboratories. This model acknowledges that historically and for the foreseeable future, the majority of funding for research institutions (heavy line with large dollar sign) comes from the government. With the advent of CRADAs, and through the process of getting better acquainted, industry has found many instances where direct funding of universities and government labs allows immediate access to valuable technology and know-how ("picking the low-hanging fruit" it is sometimes called), but altogether the amount of such funding is fairly small as indicated by the thin line and small dollar sign in Fig. 1.**

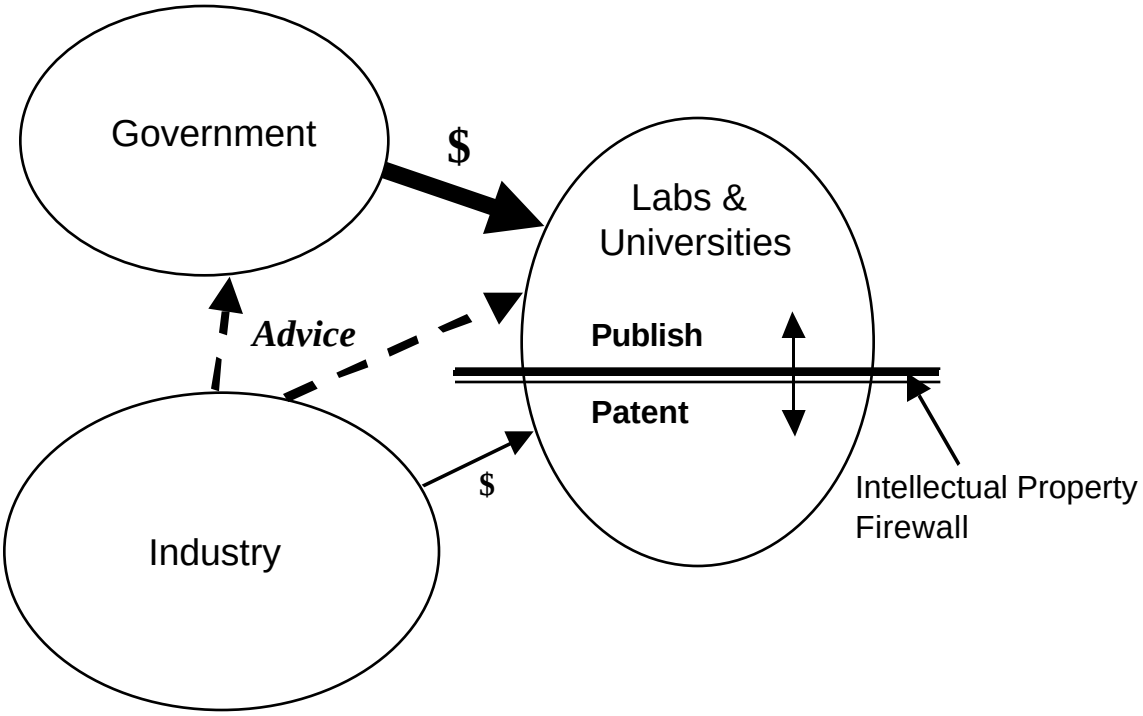


**Fig. 1. A sustainable model for interactions between Industry, Government, and research institutions on near-term plasma applications research.**

**During this phase of getting better acquainted, many problems have also emerged. From the perspective of industry, government-funded researchers have a terribly naïve understanding of business constraints and the commercial value of their research. For one thing, industry expects to own intellectual property that grows out of work they sponsor. Government researchers are generally familiar with publishing, but uninformed about the intricacies of patenting. Much worse than that, each institution, and the various government sponsors like DOE, are incredibly ambivalent on what they will and will not allow in the way of intellectual property rights, and the rules vary from institution to institution and from year to year.**

**In the model of Fig. 1, we assume that research organizations must solve these problems in order to work with industry. Intellectual property firewalls must be erected between research with a publish motivation and research with a patent motivation (another form of publication actually). The two-headed arrow across the firewall serves as a reminder that while specific research may be proprietary, the environment of labs and universities fosters considerable exchange between researchers on fundamental principles, as well as many experimental, theoretical, and computational techniques.**

**c) An example of the role of industry**

**Given the shift away from basic research in industry, some argue that industry could and should provide greater direct support to public research institutions. However, industry finds it very hard to justify to shareholders the cost of long-term research. They also find it hard to accept the inefficiency, lack of control, slowness of pace, and risk of compromised intellectual property that characterizes dealing with labs and universities. So what is their role? An oversimplified anecdote illustrates our thinking.**

**Scientists at the Los Alamos National Laboratory (LANL) saw chemical catalysis as an important and interesting subject. Brown-bag lunch meetings led to formulation of a proposal that captured local expertise in chemistry, computer modeling, materials science, spallation neutron scattering, and other analytic methods of analysis. A proposal to the US Department of Energy (DOE) met with the usual politeness, and then the proposal was ignored at first because "budgets have little flexibility". The proposal was discussed with industry "just in case" one of the big chemical companies would be interested in providing support. The industrial reaction was one of great skepticism. What could a national laboratory possible contribute in an area that industry considers one of its**

**core competencies? The critical next step was that Los Alamos formed an external advisory group and invited participation by top chemical-industry experts in catalysis. Through the process the industrial scientists became acquainted with the lab scientists and visited the lab facilities. Skepticism turned to enthusiasm.**

**In the next round of proposals to DOE, lab scientists were joined by representatives from a number of companies in the chemical industry, who could speak with authority on the importance and usefulness of the proposed research. Not surprisingly, the reception at DOE was greatly improved. Assuming this approach results in funding, industry becomes an observer and advisor who ensures that the path of research is consistent with their understanding of long-term industrial needs and interests. In our example, the actual catalysis systems chosen for study would be generic in nature, and chosen to ensure progress in scientific understanding. Depending on progress achieved, individual companies can decide at any point to step in with direct funding of specific molecular systems for which they have proprietary interest. In that case the motivation would be to patent, and the intellectual property would be protected appropriately. The understanding and "tool box" of modeling and analytic methods would remain generic.**

**This illustrates an approach to involvement with industry that we believe to be sustainable and of value to both industry and the research institutions of this nation. A relatively modest and justifiable level of up front investment is required of industry to become familiar with lab activities and to spend time participating in consortia and research planning. A similar investment of time is required by labs and universities to explain their research plans to industry, and in the process refine and strengthen the proposed program of research. The process also affords government sponsors an additional metric by which to measure the strength of proposals (already used by some agencies, but not all.)**

**d) Potential role for the US Department of Energy**

**For years there have been practical "spin-offs" from the fusion research done through DOE's Office of Fusion Energy Sciences (OFES) [1,2], but OFES was not directly funding research on near-term applications of plasma technology. However, OFES has recently been restructured, and now one of its three main goals is to: "advance plasma science in pursuit of national science and technology goals". We believe that this goal can be met through direct and sustained funding for plasma applications research within the OFES program.**

**A schematic picture of a broadened and "balanced" OFES program is shown in Fig. 2. The central goal of such a program would still be fusion science, but the explicit addition of both nearer-term applications and longer-term basic plasma physics should satisfy the goals of the restructuring, and also provide a stable scientific foundation for the eventual development of a fusion power reactor.**

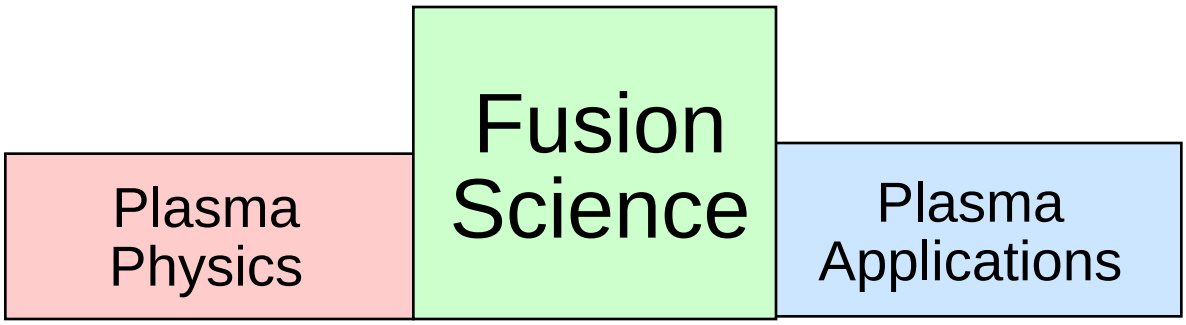


**Fig. 2: Schematic illustration of a broadened and "balanced" fusion energy sciences program. The long-term goal of practical fusion power could be supported by research on nearer-term applications of plasma science and longer-term research on basic plasma physics.**

**It will be important to create a smooth relationship between plasma applications research funded by OFES and the existing Cooperative Research and Development Agreements (CRADA) and Technology Transfer (TT) programs within DOE. In principle this relationship is simple, as described in Sec. 1; namely, OFES would support "pre-competitive" research which aims to discover and develop generic plasma technologies, whereas the CRADA and TT programs would connect these developments with specific industrial applications. From another perspective, the OFES applications research would be public, while the CRADA and TT research would contain proprietary elements, as illustrated in Fig. 1.**

**There are numerous advantages to be derived from applying the plasma expertise developed within the fusion research program to nearer-term industrial and other government needs. On the one hand, this allows fusion scientists and engineers to contribute solutions to major industry sectors including transportation, electric utilities, environment and health and semiconductor manufacturing. In addition it provides high visibility to the fusion program based on the interest of the public, Congress, and the media in new technological "spin-offs". Finally, it increases the "spin-in" of new technology into the fusion program from the industrial and other applied sectors of the scientific and industrial community.**

**There can also be a more subtle but real "synergistic" effect which flows from contacts between "basic" and "applied" research, both on an individual and an institutional level. Many creative people within the fusion program are happy to spend some time on applied research, and they naturally bring back a refreshed - and perhaps a more practical - perspective. Meanwhile, each of our Laboratories has already recognized the value of such near-term research for its own institutional future.**

**e) Benefits of cooperation in plasma applications research**

**Ideally, the government-funded plasma applications research within the US could be done as openly and cooperatively as fusion research. Strong**

**interactions between National Laboratories, Universities, and Industries would avoid duplication of effort and encourage healthy competition. A model for conducting such research in the light of the potential industrial proprietary interests was shown in Fig. 1, and discussed above.**

**One mechanism to encourage such coordination could be a national Plasma Technology Advisory Committee to help identify appropriate technological needs and connect researchers with each other and with appropriate industrial companies. It would also be desirable to encourage direct collaboration between National Laboratories and Universities, peer review of research proposals, and publication of results as a criterion for continued funding.**

## 2. Examples of Near-Term Applications Research Programs

**The following sections outline of some of the plasma applications research programs presently active in the three national laboratories represented in this paper. There are obviously many other relevant programs which are not covered here, for example, at other national laboratories (e.g. Livermore, Sandia, etc.) and universities (e.g. University of Wisconsin, UCLA, etc.)**

### a) Oak Ridge National Laboratory (ORNL) Program

**The Technology Section of the Fusion Energy Division of Oak Ridge National Lab has a large number of projects which make use of Plasma Science and Technology expertise developed as part of the Fusion Program. These "non-fusion" projects draw on the personnel expertise and extensive facilities located in the Fusion Energy Division and in other parts of the Oak Ridge Complex. These activities are supported with industry, consortia and other government agency funds.**

**Plasma science and technology can be applied to a number of industrially important areas. Areas where ORNL has been involved and some of the important applications are listed below. In all these areas there are many opportunities for both basic and applied research.**

**Table 1 - ORNL Plasma Technology Programs**

- **Plasma Sources**
  - **Discharges (*Lighting, Laser pumps, Plasma displays*)**
  - **Plasma Chemistry, Sheath & Surface Interactions (*Semiconductor etch and deposition, Film deposition, Implant, Surface treatments, Waste reduction & treatment* )**
  - **Directed sources (*Space propulsion, Plasma torches*)**
- **Plasma, and RF & Microwave control algorithms (*Process stability, Power control*)**
- **Plasma, RF and optical diagnostics (*Process sensors, Metrology, Defect detection*)**
- **Plasma & RF Modeling Science (*Sources, RF antennas, Laser deposition, Nonlinear phenomena*)**
- **Ion, Electron, Neutral and Laser beams *(e-beam Lithography, Surface and bulk material modifications, Waste treatment, X-ray sources, EUV Lithography*)**
- **RF and Microwave Sources (*Rapid thermal processing of materials, Waste treatment*)**
- **Pellet Accelerators (*Surface cleaning, Waste reduction*)**
- **Magnet Technology (*HTSC Power conversion & transmission, Medical MRI*)**
- **High temperature and high heat flux materials (*Energy efficiency, Thermal management*)**

**While many of these processes involve the use of plasmas many of them do not. The technologies developed for Fusion plasmas can be readily applied to other demanding problems. A few examples are described below. They were chosen to show the breadth of problems that can be addressed.**

**Plasma Sources - *Semiconductor etch and deposition***

**The semiconductor processing industry makes extensive use of plasma processing. Approximately 30% of the wafer processing steps involve the use of some type of plasma discharge. Figure 3 shows a magnified (above a single transistor pair) cross section of the film stack for the interconnect wires and insulators in a next generation processor. Each layer must be deposited and etched to high precision.**

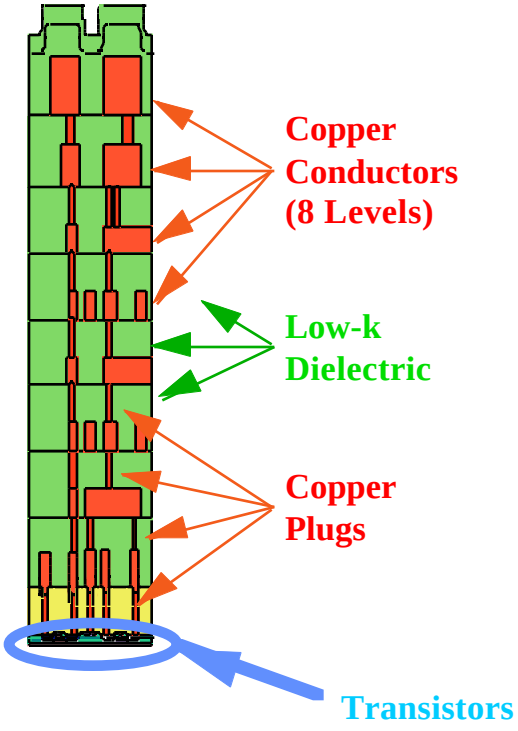

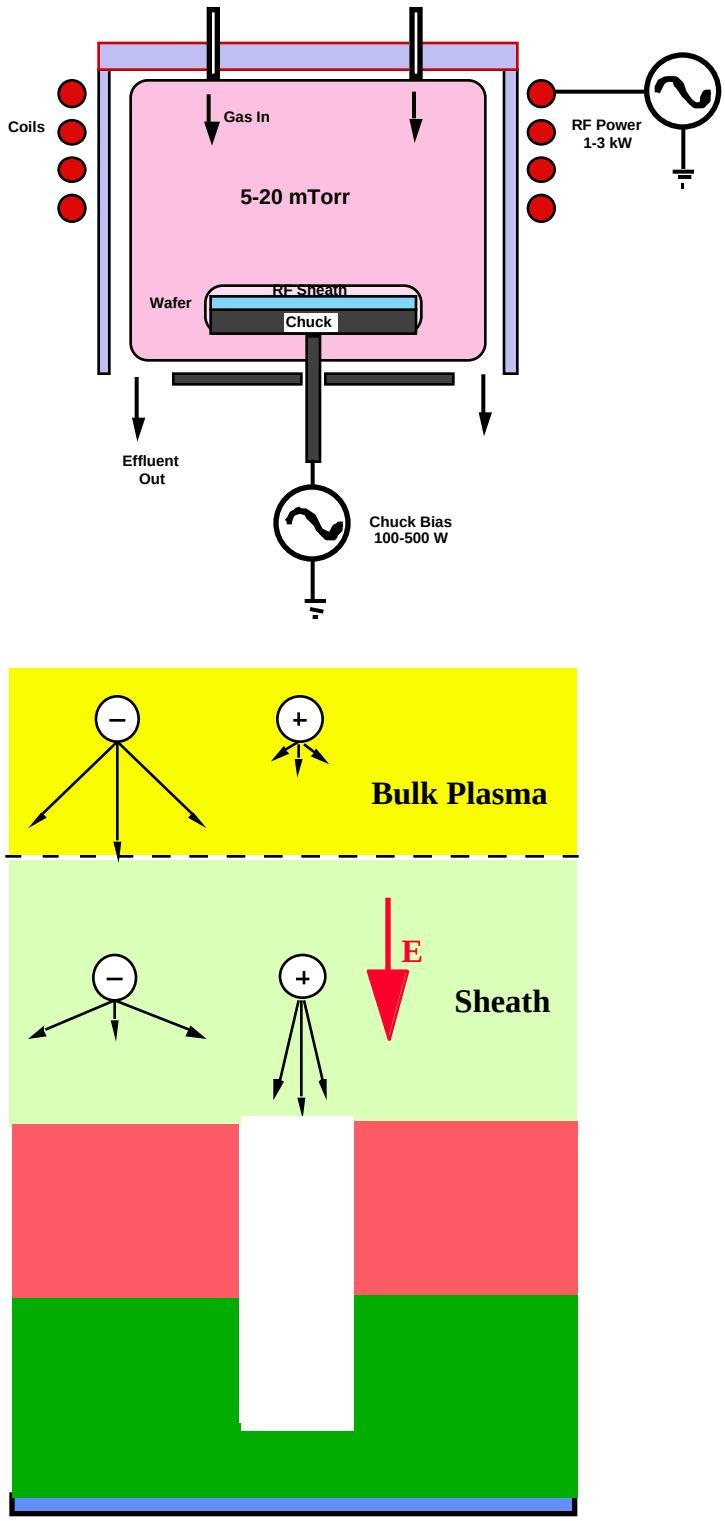


**Figure 3: Semiconductor plasma processing at ORNL**

**The process chambers use radio frequency waves (RF) to produce a plasma for either etching or deposition. The plasma chemistry is quite complex and must be fine tuned to obtain optimum results. In the case of an etch chamber, Figure 1b., the ions (various chemical fragments) are attracted to the wafer by an RF bias which is applied to the "chuck" that supports the wafer.**

**The ions and electrons are accelerated across the sheath during alternate parts of the RF cycle. The higher mass, lower temperature, ions are more directed (higher anisotropy) and hence can produce straight sided holes or trenches in the film being etched. This is illustrated in Figure 3.**

**Chemical vapor deposition (CVD) or plasma enhanced chemical vapor deposition (PECVD) is often used to fill the holes or trenches with conductors or insulators as required.**

**RF & Microwave control algorithms - *Process stability, Power control***

**A number of commercial suppliers provide plasma processing equipment. This equipment needs to operate with high reliability and reproducibility. The RF and microwave systems require careful design and**

of 60 to 90 seconds per wafer. This can result in buildup of films on chamber walls, slow degradation of chamber parts and RF systems which can cause processes to drift off of optimum. Simple, reliable and inexpensive sensors can provide the monitoring required to reduce this process drift. Figure 4. shows examples of some process sensors currently in use or being developed. The diagnostics include optical emission sensors which look at specific line emission. Changes in line emission can indicate an "endpoint" for a process where the etch is complete down to the desired depth. Changes in RF probes can signal process drifts or malfunction of the RF system. Wall sensors can measure chamber wall buildup to indicate when a "plasma clean" is required or completed. Downstream sensors in the vacuum line can also measure endpoint for processes and chamber cleans.

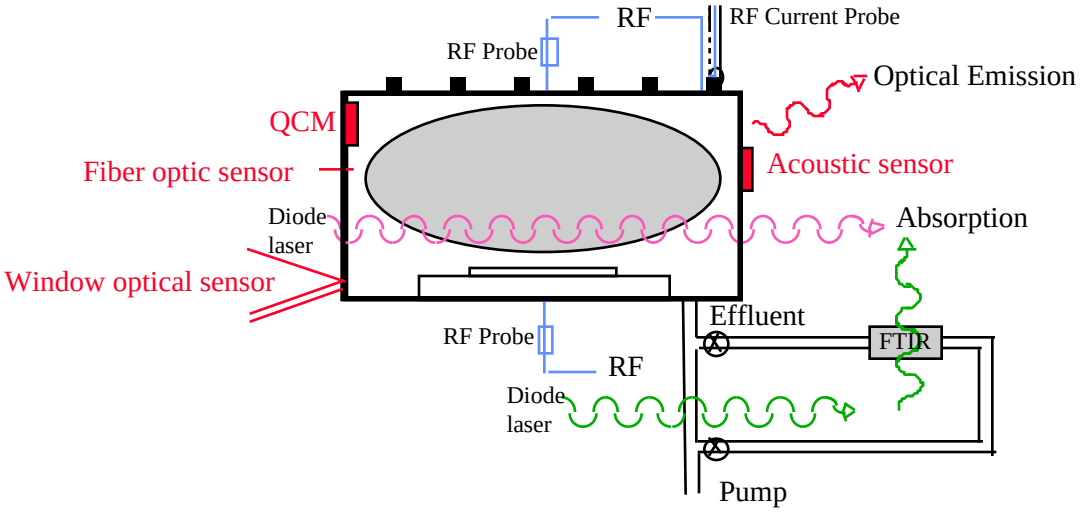


**Figure 4 - Process Sensors for plasma processing at ORNL**

## Plasma & RF Modeling Science - *Sources, RF antennas*

Plasma modeling has been used to develop new tools and processes. The complex chemistry can not be fully modeled so simplified chemical mechanisms have been developed in order to reduce the computational requirements. To effectively develop and test a model the mechanisms need to be based on fundamental measurements, compared to simple systems and ultimately to the full process. Diagnostics are required to

**obtain the plasma parameters (electron density, multiple ion densities, electron temperature, neutral and excited state densities, wall conditions, etc.). As process tools become larger and more complex, modeling is being used to reduce development time and expense.**

**The RF systems can also require extensive modeling in order to produce stable, uniform plasmas. Seemingly minor changes in chamber parts, antenna structures, or tuning elements can strongly effect the RF performance and reliability. Circuit models which take into account "parasitic" coupling and harmonic response are required. Detailed measurements are required to develop and confirm the circuit models. ORNL has worked with SEMATECH, other National Laboratories, universities and industry to improve plasma tool/process models and RF circuit models.**

**Electron beams - *e-beam Lithography***

**Optical lithography has been the workhorse of the semiconductor industry. Numerous technical advances have allowed it to be extended well beyond it's predicted practical limits. Nonetheless it will eventually (7-10 years) need to be replaced. Several candidate technologies are being developed. One option, shown in Figure 4, is currently under development at ORNL. This e-beam approach would utilize arrays of addressable field emitters to directly write patterns, thereby avoiding the need for an optical**

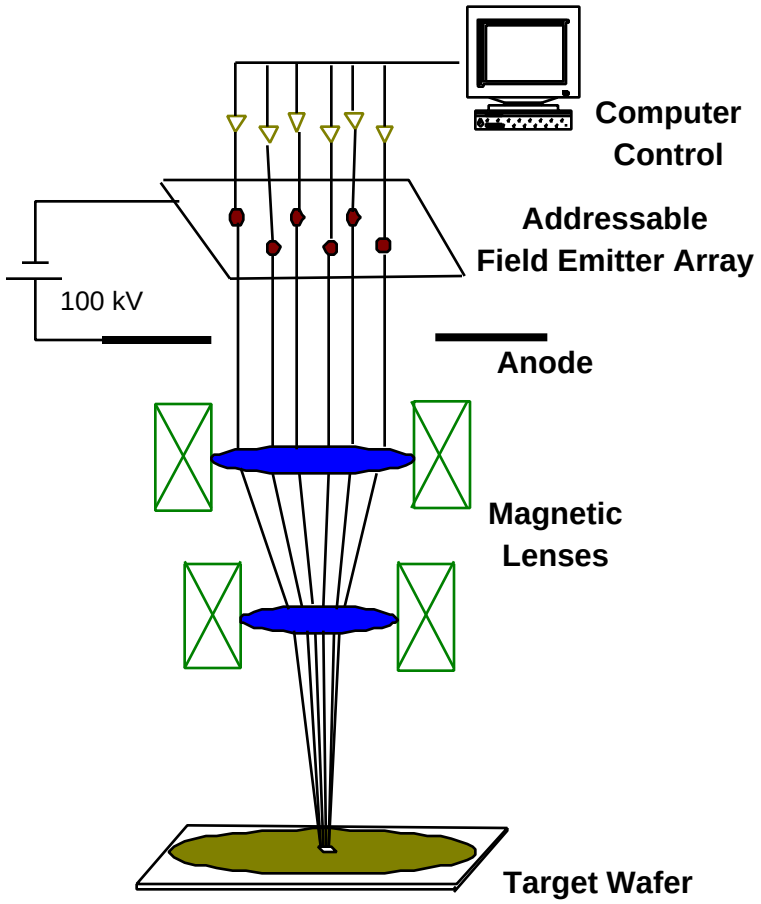


Direct write e-beam Array

**Pellet Accelerators - *Surface cleaning, Waste reduction***

**The technology developed for pellet injection into fusion plasmas has been extended for use in industrial applications. A high speed continuous pellet injector that allows solvent-free surface cleaning using cryogenic pellets (centrifuge accelerator) is shown in Figure 6.**

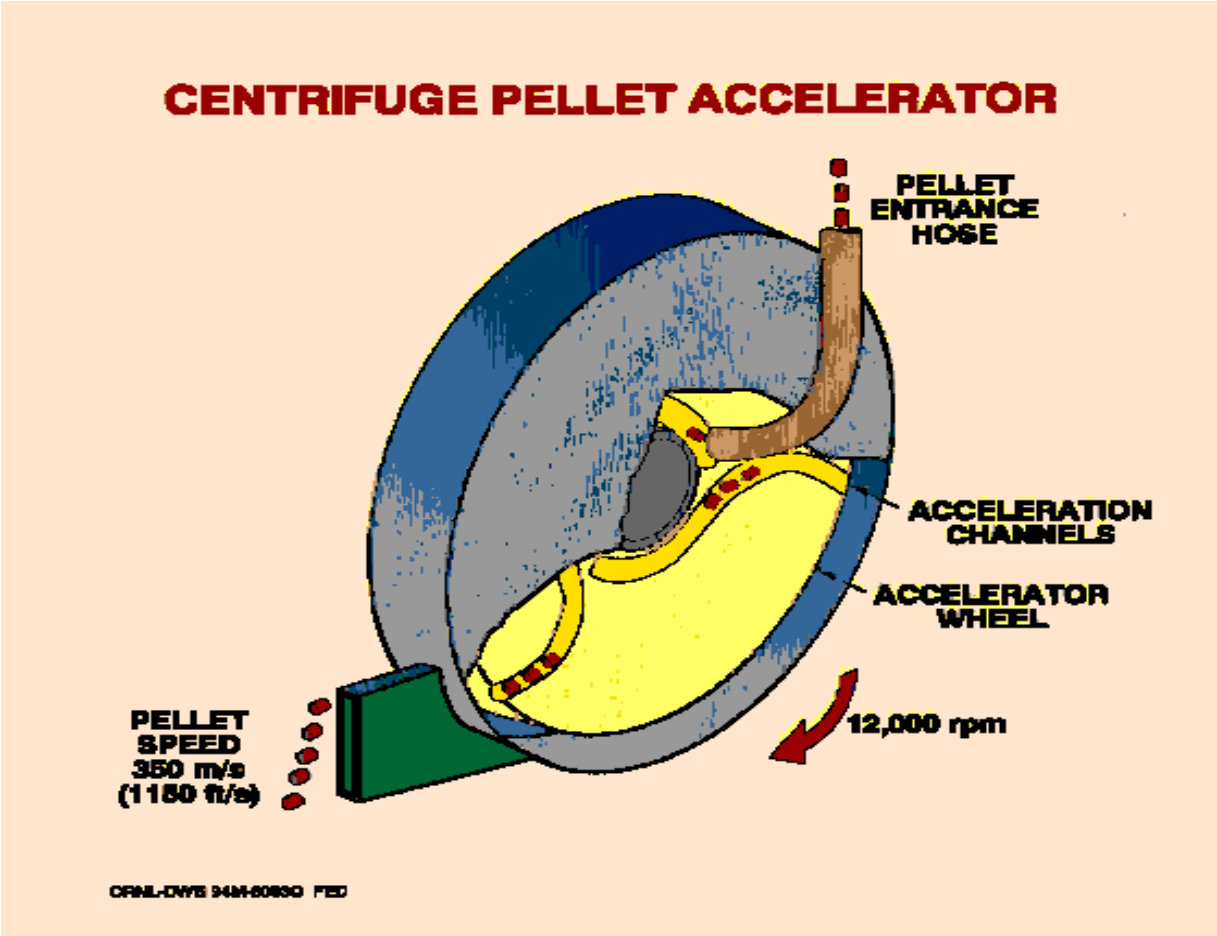


**Fig. 6 - ORNL pellet accelerator for solvent-free cleaning**

**This technology has several advantages over standard cleaning techniques. These include: higher speed, higher efficiency, narrow velocity spread, dry process and no secondary waste stream. This technology was developed at ORNL and has now been licensed to 3 companies.**

**Magnet Technology - *HTSC Power conversion & transmission, Motors, Medical MRI***

**Superconducting magnet development has a long history in the fusion program. Technology developments from fusion and recent advances in high temperature superconductors (HTSC) has opened up a number of new applications. ORNL has been involved in projects to develop several new HTSC applications. These include: superconducting transformers, superconducting transmission lines, improved MRI magnets and superconducting motors. ORNL assisted in the construction of the pilot scale superconducting transformer core shown in Figure 7.**

**Fig. 7 - Superconducting transformer core developed at ORNL**

**b) Los Alamos National Laboratory (LANL) Program**

**Plasmas are an energetic state of matter that enable advanced manufacturing techniques for materials synthesis, joining, fabricating, and surface or bulk material modification. Advantages of plasma-based manufacturing or processing over conventional methods include minimal environmental impact (dry, inert processing to minimize waste and hazardous chemicals), cost-effective environmental remediation, and a substantial reduction in energy usage (by increased energy efficiency or the replacement of energy intensive manufacturing methods). In addition, plasmas enable the use of high-temperature or non-equilibrium processes for the manufacture of novel materials and products with dramatically improved performance. Within the next several decades, plasma-based manufacturing is likely to affect almost all manufacturing sectors in the US. Economy. As such, the potential impact of this effort nationwide is tremendous.**

**A principal issue for the development of plasma-based manufacturing is the ability to efficiently generate plasmas with spatial scales and power-densities applicable to high-throughput manufacturing. Other issues involve the ability to quantitatively model and assess the parametric interaction of plasmas with material surfaces or bulk materials. To this end, the Plasma Physics Group at the Los Alamos National Laboratory, in collaboration with other Laboratory and industrial partners, have developed plasma source technologies that use electrostatic and electromagnetic accelerators, and radio frequency and laser generators with a view to their application to manufacturing systems. A brief synopsis of major efforts follows.**

***Plasma Source Ion Implantation:***

**Plasma source ion implantation (PSII) is rapidly being recognized as a cost-effective alternative to the more conventional ion-beam implantation for the surface modification of materials. In the PSII process, the object to be implanted is immersed in a plasma containing the desired implantation species (nitrogen, carbon, boron, or metallic ions), and the ions are drawn into the surface by the application of short (~20 microsecond), high-voltage (i.e., of the order of -100 kV) pulses. PSII has been shown to produce dramatic increases in material surface hardness and resistance to corrosion, and the fundamental process has been well characterized by conventional ion-beam implantation. PSII is an environmentally friendly technology, requiring no hazardous chemical baths for processing and producing essentially no waste stream.**

**Unlike ion-beam implantation, which is inherently a line-of-sight process, PSII can treat essentially the entire surface of an object simultaneously and requires no in-vacuum manipulation of the treated object. Elimination of the need to manipulate the target in vacuum and the ability to implant large surface areas or multiple components simultaneously are the bases for the predicted cost reductions in PSII as compared with conventional ion implantation. As part of a three year CRADA involving Los Alamos, General Motors, and the University of Wisconsin, we assembled the world's largest PSII Facility. It is being used to develop and verify PSII-based processes for use in extending the life of automotive components, industrial tools, and dies and to scale these processes for use on large-surface-area components and multiple smaller components. The PSII project was recognized as a 1997 R&D 100 award winner.**

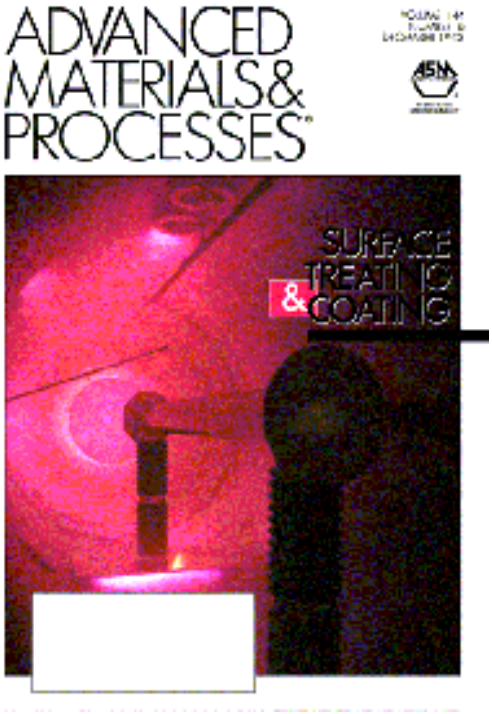


**Figure 8. An aluminum cylinder being implanted with nitrogen inside the CTX vacuum chamber. PSII is now recognized by the material science community as a viable advanced surface treatment.**

***Contamination and Uniformity Control in Plasma-Processing Tools***

**This effort, a 1996 R&D 100 Award winner, involves the design and evaluation of various ultraclean field-corrected electrodes, or wafer chucks, to improve process uniformity and particulate contamination in the plasma processing of semiconductor materials. Dust in plasmas, caused either by homogeneous nucleation or by film flaking, has been shown to be charged negatively, and is thus suspended in the presence of the electrical fields that accompany a plasma. A process has been developed for in-situ detection of suspended particles using a technique called laser light scattering. A photo of suspended dust clouds in a low pressure, nonequilibrium plasma can be seen below. By designing a groove into the electrode of plasma tool, it is possible to "corral" the particles into a stream and then to watch them flow out of the plasma and into the pump port.**

**Electrodes used by our industrial partner, the original equipment manufacturer to the semiconductor industry, was modified for field**

**tunability, which is achieved by designing dielectric and/or metal tuning elements in the electrodes to compensate for electrode-induced plasma electrical aberrations. The resulting trap-free discharge greatly reduces particle contamination by canceling the net electrostatic confinement of particles in the discharge. The field-corrected electrode also improves process uniformity at the same time. Both factors dramatically improve manufacturing yield and reduce product cost.**

---

.

**Figure 9. Suspended particulates in a semiconductor manufacturing tool.**

***Atmospheric Plasma Jet***

**A novel plasma jet is being developed for a variety of surface cleaning and decontamination applications at atmospheric pressure. The jet is formed by a resonant cavity plasma discharge between two coaxial electrodes. Unlike conventional plasma sources, this atmospheric-pressure plasma jet (APPJ) provides an intense flux of long-lived metastables and radial species that are capable of rapidly etching metals and other materials. For example, the APPJ etches tantalum, tungsten, and silicon dioxide 2, 3, and 10 times faster, respectively, than low-pressure plasma etchers. Polyimid films are etched almost 30 times faster. The**

**APPJ has also shown utility in decontaminating surfaces from bio-toxins and bio-agents.**

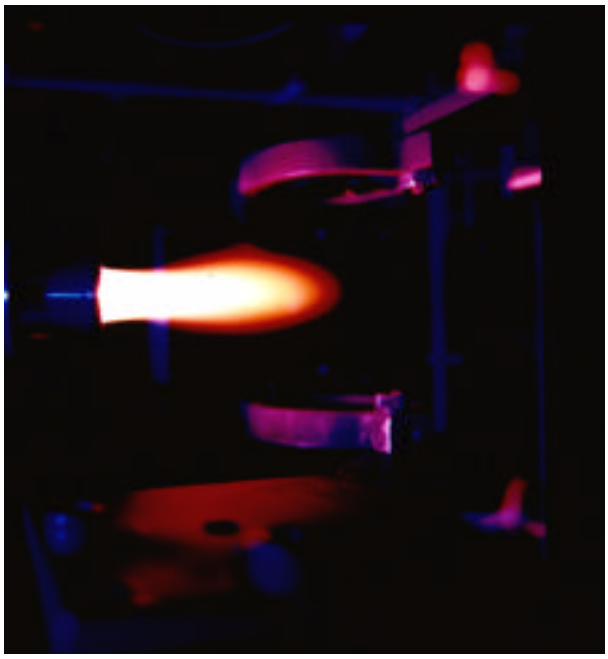

**Figure 10. Operation of the APPJ in nitrogen and helium at 300W rms**

**c) Princeton Plasma Physics Laboratory (PPPL) Program**

**Work on near-term plasma applications is done within the Applications Research Division at PPPL. The goal of this Division is to develop non-fusion plasma technologies to meet the needs of industry and government, based on the knowledge and experience gained at PPPL through the fusion program. These activities are presently supported from outside the Office of Fusion Energy Sciences (OFES) of DOE, but are often started using "seed money" from the laboratory discretionary fund (LPDA).**

**Table 1 lists some of the current applications research projects at PPPL. These projects cover a wide range of plasma technologies, some of which PPPL has special expertise such as RF power systems and laser diagnostics. Others of these applications draw on fusion-related plasma science such as plasma stability theory, plasma-surface interactions, and atomic physics.**

**It should be noted that PPPL, as part of Princeton University, also has a mission to train students in plasma physics, so several of these projects are also graduate theses or post-doctoral work. These research projects at PPPL are more oriented toward basic research rather than product development, and are not intended to compete with R&D being done in industry.**

**Usually these applications projects start with internal laboratory discretionary funds (LPDA), and after 1-3 years continue only with external support. For illustration purposes, further details about a few of these are as follows:**

- **The AMTEX CRADA (American Textile Cooperative Research and Development Agreement) is part of a Department of Energy, Laboratory Technology Research Program to improve technology in the US textile industry, particularly in the area of synthetic fiber production. The properties of the synthetic polymers used to make textiles depend on their detailed shape and crystallinity, which is controlled at the point when these fibers are extruded from a liquid bath and solidified to form micron-**

**diameter filaments. The AMTEX project at PPPL is to develop an on-line fiber process diagnostic based on rapid measurement of the fiber's birefringence, which is a function of their crystallinity, shape, and size. The technique is an adaptation of technology and theory developed for Thomson scattering measurements of the electron temperature and density of tokamak plasmas, but of course the details of the instrumentation and modeling are substantially different (see Fig. 11). The goal of this project is to provide a prototype instrument which can be used by industry to provide data for improved feedback control of the fiber production process.**

- **The arc furnace project was started using LPDA funding to investigate the causes of some well-known problems with arcs in high-powered arc furnaces used for recycling steel in "mini-mills". Specifically, these arcs tend to deflect away from the power supply in DC furnaces, and are very unstable in both DC and AC furnaces, causing increased erosion of the refractory wall and "flicker" on the power grid, respectively. A small-scale arc experiment (≈ 20 kW DC) was built to study the physics of the arc equilibrium and stability, and this evolved into a Ph.D. thesis project for a Princeton University graduate student (see Fig. 12). Theoretical models are being developed to explain the results in this small experiment, and these can be applied to evaluate practical control techniques for industrial-scale furnaces (≈100 MW DC).**

- **LPDA funds are also supporting the initial development of a segmented cathode plasma Hall thruster at PPPL. Plasma thrusters are receiving increasing attention in recent years, primarily because of requirements in the rapidly growing need for telecommunication satellites. A Hall thruster is essentially an annular ion diode in which a radial magnetic field inhibits electron motion, but does not impede ions from accelerating along the axial electric field (see Fig. 13). A segmented cathode might improve the Hall thruster performance by raising the efficiency or by providing more handles on other aspects of the operation, such as plume divergence. By using a segmented cathode to inject electrons from the side, rather than from a cathode located beyond the acceleration region, charge neutrality can be attained, in principle, without axial electron current, so that all power is absorbed by the ions. Such a**

**thruster will be built and diagnosed at PPPL. Follow-on funding will be pursued from NASA and USAF.**

**Table 2 - Plasma Applications Research at PPPL**

| Project | Application | Funding source |
|---|---|---|
| AMTEX | development of a laser scattering diagnostic for measuring textile fibers | DOE CRADA |
| Ozone generation | testing technique for ozone generation using a rapidly quenched plasma torch | DOE CRADA |
| Arc furnace | improve control of arcs used in electric arc furnaces used for steel recycling | LPDA* |
| RF pasteurization | improving RF technology used for use in destroying bacteria in raw liquid foods, e.g. eggs, fruit juices, milk | Agriculture Dept. |
| Plasma display | improving efficiency of flat panel plasma displays used in high definition television | LPDA* |
| Plasma thruster | developing segmented Hall thruster for improving the efficiency of satellites | LPDA* |
| Sputtering source | development of improved magnetron plasma source to improve sputtering tools | LPDA* |

* Laboratory Program Discretionary Activity of PPPL

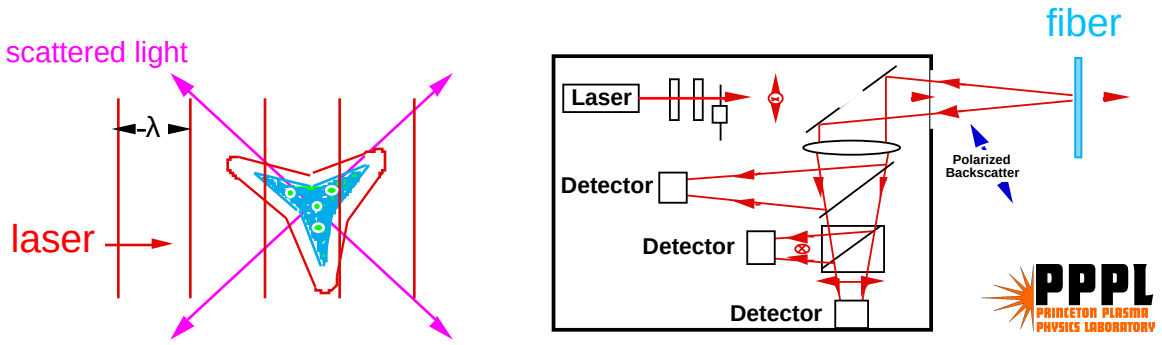


**Figure 11: Schematic illustration of the AMTEX textile fiber diagnostic application being developed through a CRADA at PPPL. Synthetic polymer fibers are extruded with a size, shape, and crystillinity which determines their properties. A laser scattering technique is being developed at PPPL to measure the birefringence of these fibers. This information can be used for improved on-line process control in the textile industry.**

PPPL Furnace
Power~20 kW

Arc Instability
@ I = 200 A

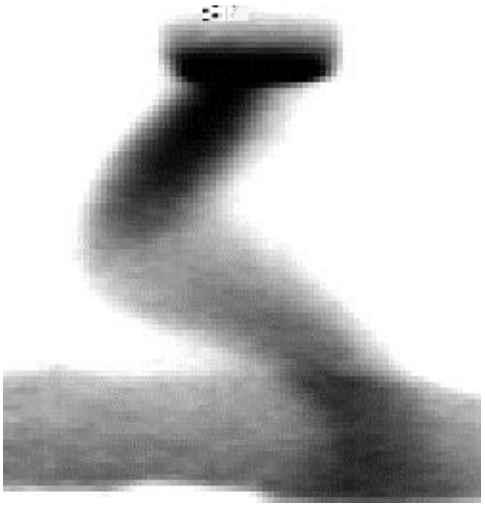

**Fig. 12 Illustration of the PPPL arc furnace experiment (left), and a high speed photograph of an unstable arc (right). This furnace was designed to be a small version of an industrial-scale electric arc furnace, such as used for recycling scrap steel. Experiments and modeling have examined the physics of arc deflection in a transverse magnetic field and the spontaneous helical instability, based on principles developed in the fusion program.**

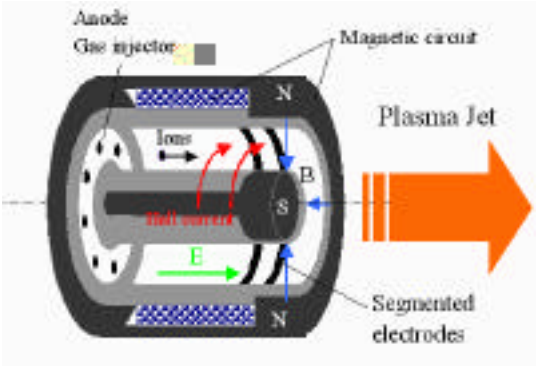


**Fig. 13 Illustration of a Hall thruster such as is being developed at PPPL. Plasma thrusters are being given increasing attention in recent years, driven primarily by requirements in the rapidly growing need for telecommunication satellites. The segmented cathode might improve the Hall thruster performance by raising the efficiency or by providing more handles on other aspects of the operation, such as plume divergence**

**[1] S.O. Dean, "Applications of Plasma and Fusion Research", Journal of Fusion Energy 14, 2, (1995) p. 251, and references therein**

**[2] C. Surko et al, Plasma Science - From Fundamental Research to Technological Applications, National Academy Press, 1992**

**<u>Acknowledgments:</u> The research projects described in this paper were developed by the following groups of people: at ORNL - G.L. Bell, L.A. Berry, T.S. Bigelow, J.B.O. Caughman, J. L. Cook, J.A. Demko, P.W. Fisher, W.L. Gardner, M.J. Gouge, R.H. Goulding, J. Hardy, R.D. Mikkola, S.L. Milora, J.A. Moore, P.M. Ryan, S.W. Schwenterly, C.E. Thomas, T.L. White, in association with V. Resta and G. Yetter (SEMATECH), T. V. George (DOE), D.J. Hoffman (Applied Materials), N. Williams (LAM Research), and N. Hershkowitz (U. W. Madison); at PPPL - S. Cohen, P. Efthimion, N. Fisch, E. Fredd, M. Goeckner, D. Mansfield, H. Okuda, Y. Raitses, M. Karasik, L. Meixler, D. Mikkelsen, H. Park, J. Schmidt, B. Stratton, J. Wang, and R. Wilson, in association with R. Knight (Drexel Univ.); and at LANL - I. Hennins, H. Herrmann, C. Munson, J.Y. Park, D. Rej, H. Schneider, and G. Selwyn, and B. Wood. We also thank S.O. Dean for organizing the Fusion Power Associates Meeting at which these papers were presented.**