Quantum-entangled photon interferometry

Roger K. Richards
Oak Ridge National Laboratory, P O Box 2008, Oak Ridge, TN, USA 37831-6054
Email: richardsrk@ornl.gov

ABSTRACT

A two-color quantum-entangled photon source is used to produce fourth-order interference. Because the period of the interference is produced by the frequency difference of the entangled photons, problems associated with counting fringes can be avoided. This also permits measurements at a virtual wavelength, which can prevent problems associated with transmission or absorption when such a longer wavelength may be needed. The interference wavelength can be varied with a geometry change in the beam path without any change in the source wavelength. The entangled photons are produced using an argon ion laser at 351 nanometers and a type I BBO crystal. The interference is detected in coincidence using four photomultiplier tubes.

Keywords: Quantum entangled, Interferometer

1. INTRODUCTION

Interferometers are commonly used to measure the shape of surface features on structures. If these surface features are large, measurements made at the shorter wavelengths will require fringe counting to track changes in height. Using longer wavelengths will prevent this problem, but it is not always possible to use longer wavelengths. For example, the measurement of a specimen underwater would exclude all but visible wavelengths. This work investigates the use of a quantum-entangled source as an interferometer to overcome this limitation. A quantum-entangled interferometer utilizes fourth-order interference of entangled photons to measure phase differences. Fourth-order interference effects are measured by counting coincidence events in contrast with second-order interferences that are revealed as changes in beam intensity. The phase differences are produced by path length changes in one arm of the interferometer and can therefore be used to measure such features as surface structures.

Photon entanglement is concerned with the quantum properties of the biphoton, a termed coined by Klyshko[1] and extensively promoted by Shih, *et al.*[2] to express the essential unitary and quantum nature of the pair emitted in parametric down conversion. In the down-conversion process, a pump photon of energy ω_p, forms a well-defined quantum state of overlapping electromagnetic fields in the presence of an acentric crystal lattice. The state thus formed has particular well-defined quantum numbers for polarization, energy, momentum, and position that are preserved upon decay into two photons (and occasionally three photons). The ensuing two-photon state, preserving the quantum numbers of the parent state, is necessarily entangled in that any measured property of one of the photons allows one to predict with certainty the corresponding property of the other. A conservation law is the fundamental principle behind such entanglement. Thus, if the pump photon of energy ω_p interacts with nonlinear fields in an acentric crystal, it can be re-emitted as two photons with energies ω_1 and ω_2 where $\omega_p = \omega_1 + \omega_2$.

The physical "entanglement" of two quantum entities simply means that knowledge of the properties of one entity entails knowledge about the properties of the other. The mathematical description of entanglement is that of inseparability. That is, a state of two entangled particles cannot be separated into a single product of two distinct states but must be represented as a sum of products.

2. DESCRIPTION OF EXPERIMENT

In contrast to most of the experiments investigating entangled photons, this research did not investigate polarization with degenerate photon energies, that is, $\omega_1 = \omega_2$. Instead, a source was constructed producing two-color entangled photons. This is similar to a source described by Rarity and Tapster[3] that was a coincidence-based measurement system that showed two-color, fourth-order interference. Their apparatus, however, used two separate beam splitters with four emergent beam paths. The apparatus erased momentum information and thus produced a fourth-order interference, but because the two-color beams were not merged, the device did not lend itself for spatial scans of a specimen.

In order to observe fourth-order interference with a general configuration that would permit interferometric measurement of specimens, a specialized apparatus was constructed. The apparatus consists of a source of specially prepared photons and a specialized detection system. The source of entangled photons is a nested three-interferometer system in which two Mach-Zehnder interferometers form the legs of a third Mach-Zehnder interferometer. The interferometer selects two wavelengths from the down-converted spectrum of a bi-refringent (BBO) crystal that is pumped by a shorter wavelength coherent beam (from a UV laser). The interferometer configuration is diagramed in Fig. 1.

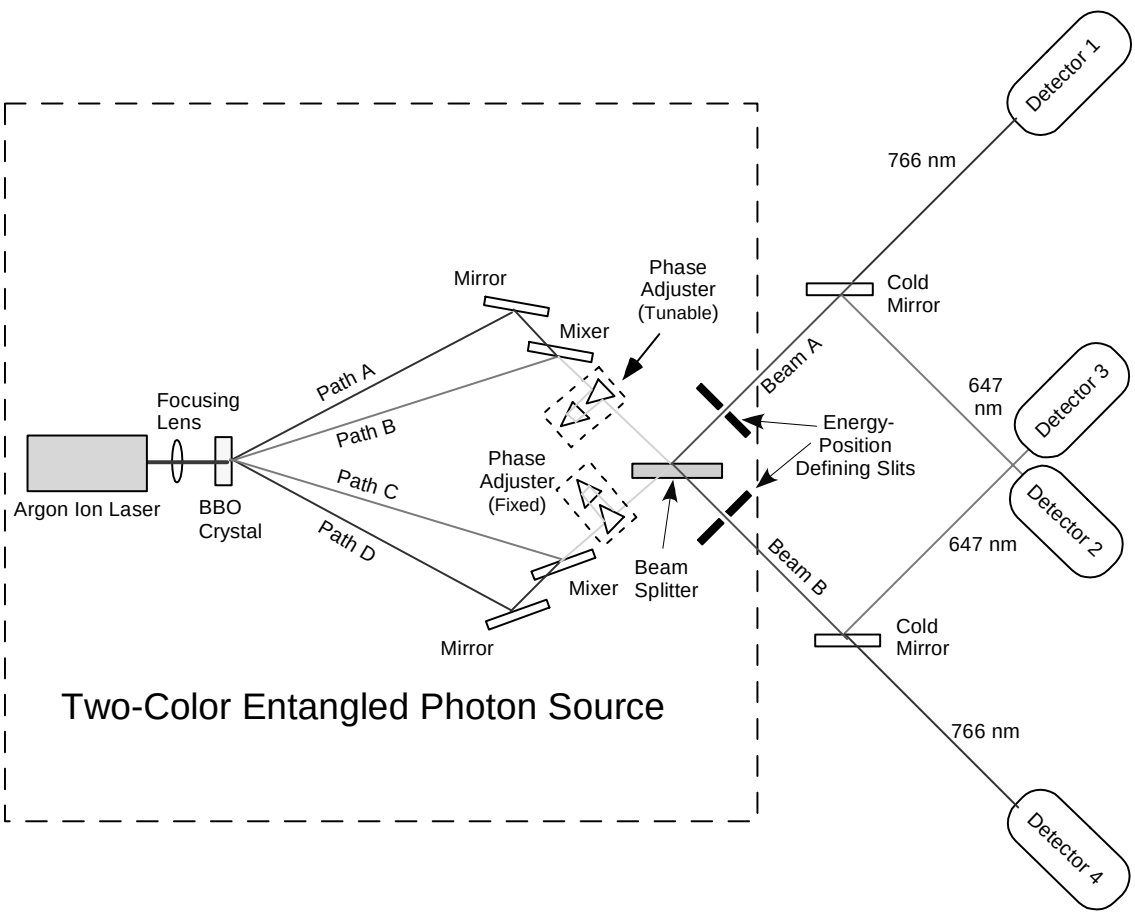

Fig. 1. Schematic of the quantum entangled interferometer. The equipment inside the box forms three Mach-Zehnder interferometers. The detectors ouside the box are not part of the interferometer but are necessary for the coincidence measurements.

Beginning at the left in the diagram of Fig. 1, (or the top of Fig. 2) a source of short-wavelength, coherent light is focused on a bi-refringent crystal, which performs downconversion to two entangled photons (biphotons) that sum to the applied energy of the source. The pump photon source used was an argon-ion laser operating at 351.1 nm. A focusing lens is placed between the laser and the downconversion crystal to produce a Gaussian beam waist at the crystal. The crystal used is a beta-barium borate (BBO) although other crystal types may be used depending on the desired wavelengths. The crystal downconverts the pump photon beam to a spectrum of energies emitted in a cone pattern whose angles are determined by several specified parameters including phasematching angle of the crystal (cut by the manufacturer for Type I downconversion with 41 degree phasematching) and angle of the pump beam.

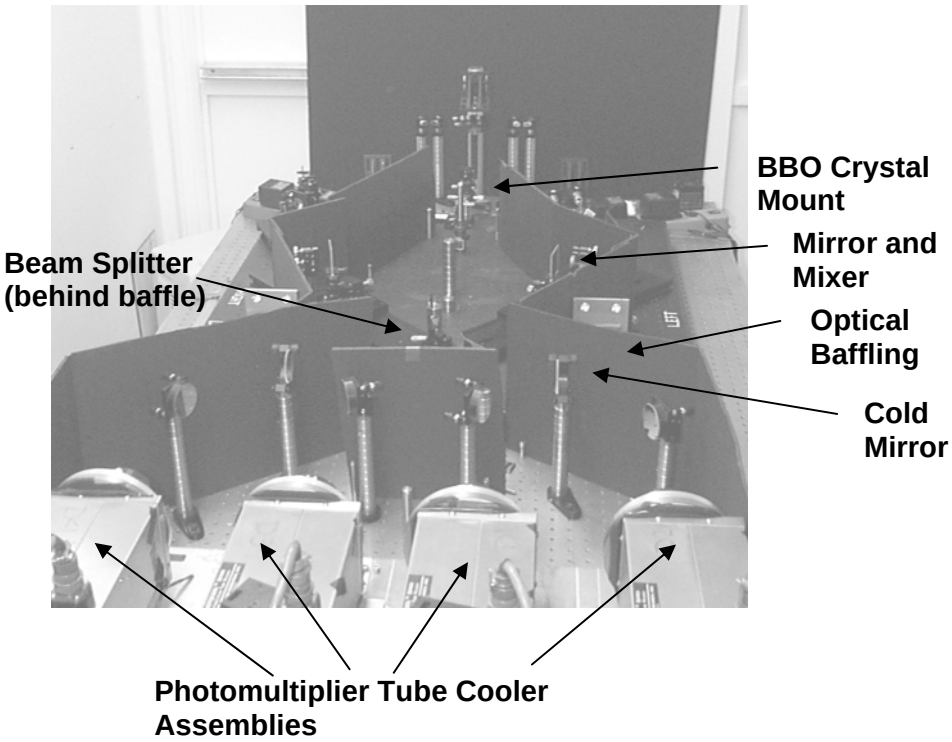

Fig. 2. Photograph of the entangled photon interferometer showing the location of the BBO crystal, beam splitters, cold mirrors, and the detectors.

Wavelengths of 766.5 nm and 647.9 nm were selected for the biphotons, that are emitted in concentric cones from the crystal. The plane of the interferometer (consisting of mirrors, mixers, and beamsplitter) cuts across those cones; biphotons traveling outside that plane are lost. The longer wavelength biphotons (766.5 nm) travel along the outside paths (A and D) while shorter wavelengths (647.9 nm) travel along the inside paths (B and C). Mirrors and mixers are placed to establish the necessary angles relative to the crystal's centerline to define paths unique to those wavelengths. The mirror-mixer combinations on each side of the apparatus converge the paths of their respective wavelengths (paths A and B and paths C and D) and send them to the beamsplitter for interference at a single point. Phase adjusters are placed in the converged paths to permit variation in the relative phase of the photons arriving at the beam splitter. The phase adjusters, one fixed and one variable, vary the optical path length. Phase adjustment is essential to achieving a condition that permits one wavefunction to exit on output beam A while its entangled double emerges simultaneously on beam B.

At the beamsplitter all paths converge, interfere then re-emerge in two beams. The two emergent beams consists of the converged transmitted and reflected photons from paths A-B and C-D. Optical slits are

placed beyond the beamsplitter to further define the beam path in both energy and position. Slits are necessary to minimize the deleterious effects of non-contributing biphotons arriving at the detectors.

Although those non-contributing biphotons are of correct wavelength for coincidence, they emerge from the crystal at different locations (along the face of the crystal and along the pump beam path) and thus arrive at the detectors from slightly different angles and phases reducing interference visibility.

Both the merged-path configuration and the resulting nature of the emergent biphotons are unique to this experiment. Photon pairs can be forced to branch with a 50-50 probability to the left (upper path after the beam splitter) or the right by a controllable adjustment of the phase of the upper path with respect to the lower path. A phase change of π from that branch point will cause the photon pair to split such that one half always travels to the left while the other half goes to the right. Table 1 shows the four coincidence possibilities. By phase adjustment, coincidence counts in either pairs (1,2) and (3,4) or (1,3) and (2,4) can be emphasized. No coincidences occur in either pairs of same wavelength.

Detector	Output Beam	Wavelength	Coincidence Pairs
1	A	766.5 nm	(1,2) (1,3)
2	A	647.9 nm	
3	B	647.9 nm	(3,4) (2,4)
4	B	766.5 nm	

Table 1. Source of the coincidence pairs.

The detection system, although not a part of the interferometer, is necessary to observe the interference effects. The detector system is shown to the right of the beam splitter and slits shown in Fig.1. Cold mirrors[4] separate the output beams into their two component wavelengths and direct them to one of four detectors. The experiment used cooled photomultiplier tubes; however, solid-state detectors will also work. Four channels comprise the counting system. The system has the capability of (1) counting coincidence events between detector outputs as shown in Table 1 and (2) counting and integrating events in each channel.

3. RESULTS

Using the interferometer described in Fig.1, we were able to see the fourth-order interference effect in our apparatus as originally reported by Rarity and Tapster. The interference, visible only in the coincidence counts of entangled photon pairs, exhibits an oscillation period proportional to the difference wavelengths, which we attribute to non-locality effects. We observed these interferences on several occasions but could not readily reproduce the results. This stability problem was due to loss in maintaining precision alignment to sub-micron tolerances that led to decoherence and loss of visibility. We believe that improved alignment technique and better control of room temperature and humidity will permit readily reproducible results.

The fourth-order interference is obtained by plotting coincidence counts against phase adjuster position. To maximize visibility and reduce statistical error, the coincidence counts are summed according to the definition of visibility: $V = [(1,2) + (3,4) - (1,3) - (2,4)]/[(1,2) + (3,4) + (1,3) + (2,4)]$. The result of this interference is shown in Fig. 4 below. The scan was limited by the 10 micron range of the stepper used to move the phase adjusting prism. This particular run showed almost a 20 percent visibility and an oscillatory period of 4.1 μm, which corresponds to the wavelength of the difference energy. The interference pattern persisted for about an hour. After which, the room temperature drifted sufficiently to cause misalignment in either overlap or path length.

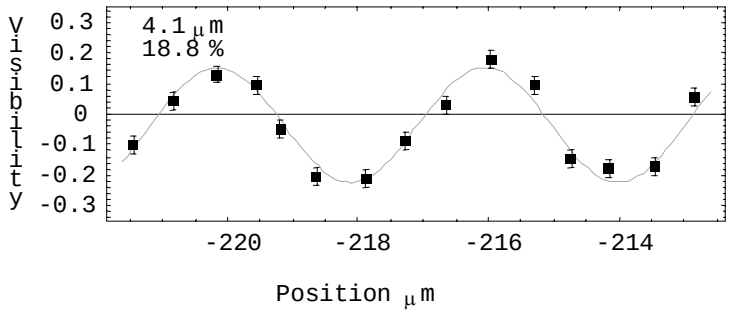

Fig. 3. The visibility versus phase adjuster position.

4. CONCLUSIONS

The interferometer, configured for fourth-order interference, can be used to measure surface variations at the nanometer scale. Because the interference period is related to photon pair difference wavelength, not the wavelength of either taken separately, long wavelengths than span large surface jumps can be simulated by much shorter ones, thus eliminating the need to count fringes.

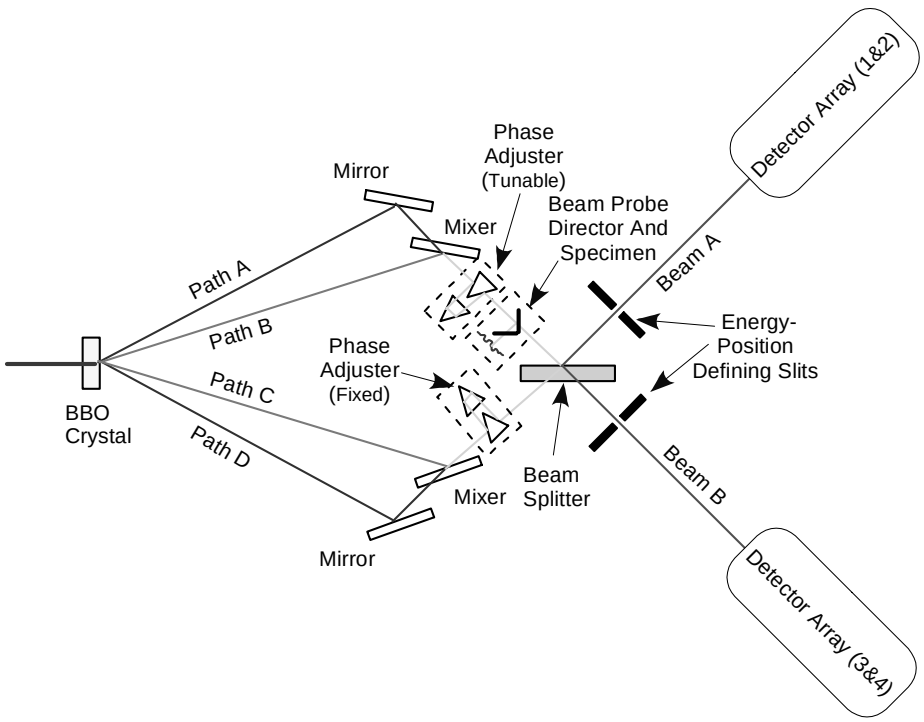

Fig. 4. Schematic of interferometer showing position of specimen.

The feature depth of a specimen can be measured by placing it in an interior beam path of the interferometer described in Fig. 4. The optics of the interferometer can be arranged to use either the surface reflections from the specimen or transmission through the specimen material. The interferometer utilizes fourth-order interference of entangled photons to measure phase differences. Fourth-order interference effects are measured by counting coincidence events in contrast with second-order interferences, which are revealed as changes in beam intensity. For the case of a reflective specimen, feature surface-depth variations cause minute temporal phase differences in the optical signal pathway, which also modify the interference position.

The wavelength of the interference is only indirectly related to that of the wavelength used to probe the specimen; the wavelengths and their differences can be adjusted. Thus, either or both of two different wavelengths can be selected to probe and scan the specimen (obviously chosen to be compatible with it) while a fourth-order interference occurs at the difference wavelength. This wavelength dissimilarity is useful for applications in which there may be compatibility problems with longer wavelength light. There are applications where this will have unique advantages over interferometric measurement methods currently in use. Although visible and near IR wavelengths were used in our initial experiments, there is no theoretical upper or lower limit to the probe wavelength selection. More importantly, a specimen may be scanned by moving it with an x-y translation stage allowing the construction of a three dimensional view of the surface. (It may also be possible to apply this technique to particles as well.)

The quantum interferometer required for this application generates a two-color, two-output beam of energy and momentum entangled photons. Detectors are placed in the exit path of these beams to count coincidence events. The coincidence counts between the four detectors are summed using the formula given above. The summed counts indicate phase position and hence depth of a feature on the specimen. A specimen is placed in one leg of the interferometer as shown in Fig. 5.

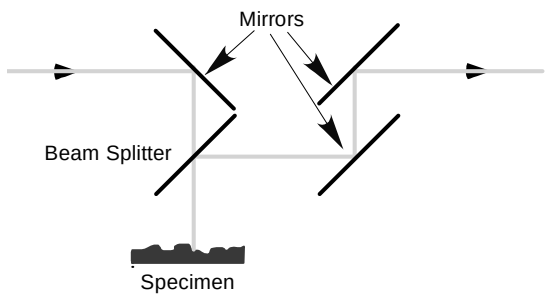

Fig. 5. Example of specimen placement for interferometric measurements.

The combined photons from paths A and B (prior to the beam splitter) are reflected from the surface of the specimen as shown in Fig. 4. Fig. 5 shows a detail of the components for redirecting photons out of the beam path to the specimen and back. (Note that the path length adjuster in the leg with the specimen may be eliminated depending on the overall geometry and path length dimensions.)

By placing the specimen in the light path using this configuration, variations in specimen surface height result in changes in (timing) phase of the light traveling along the path. This has the same effect as adjusting the phase adjuster, which is to force the fourth-order interference pattern to a different position. The result is a change in coincidence count rate. Thus, the relative vertical position of the specimen surface is measured with respect to a reference point.

The specimen may be scanned in two additional dimensions by a nano-motion x-y translation stage. The precision of motion can range from micrometers to nano-meters depending on the type of stage employed. A course and fine motion stage can be stacked to achieve a wide range of motion with fine resolution. With x-y motion control and position indication from the translation stage and a wide-range depth measurement from the special interferometer, a three dimensional view of the surface can be constructed.

An illustrative example of the interferometer's measurement capability is shown diagrammatically in Fig. 6 by plotting count rate as a function of surface variation. The top portion of the figure depicts a variation in specimen surface displacement with horizontal position. The bottom portion shows the proportional effect on coincidence count rates in detectors of complementary energies. The example shown is for the case of nearly equal path lengths. Thus, the complementary photon pairs are split between output beams A and B (i.e., coincidences are counted in detector pairs 1 and 3, and 2 and 4). By selection of beam splitter position

or path length adjustment, photon pairs can be made to travel down the output beams not split. In that case, the coincidences will be seen in detector pairs (1, 2) and (3, 4).

For this interferometer, the difference wavelength (of the two selected crystal output wavelengths) determines the interference wavelength, which produces the fringe cycle. The cycles can be made arbitrarily long by closely spacing the wavelengths; therefore, wide ranges of displacement measurements can be made without skipping to the next cycle and thus having to count fringes as with other interferometric displacement measurement schemes.

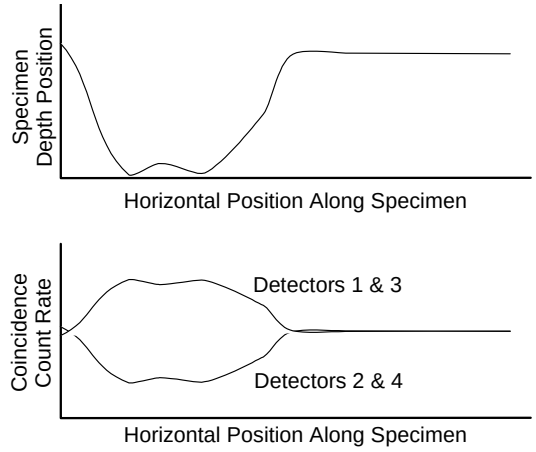

Fig. 6. Example of expected measurements using entangle photon interferometer.

ACKNOWLEDGMENTS

The author is grateful for the assistance in this research from many of the ORNL staff, in particular for the efforts of Bill Dress and Roger Kisner who performed most of the work presented here. Research sponsored by the U.S. Department of Energy, Office of Distributed Energy under Contract DE-AC05-00OR22725 with UT-Battelle, LLC.

REFERENCES

1. David N. Klyshko, Photons and Nonlinear Optics, Gordon and Breach, New York, 1988.
2. Y. H. Shih, D. V. Strekalov, T. D. Pittman, and M. H. Rubin, “Why Two-Photon but Not Two Photons?,” Fortschr. Phys., **46**, 627-641, 1998
3. J. Rarity and P. Tapster, "Two-color photons and nonlocality in fourth-order interference," *Phys. Rev*. A **41**(9):15139-5146 (1990)
4. Cold mirror reflects the shorter wavelength while transmitting the longer one.