ORNL : 6520

Decision Guide for Roof Slope Selection

MARTIN MARIETTA ENERGY SYSTEMS LIBRARIES

3 4456 0291324 8

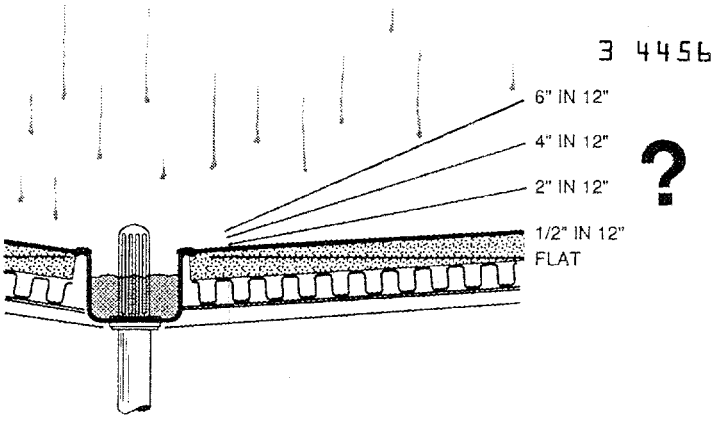

October 1988

AIR FORCE ENGINEERING & SERVICES CENTER
TYNDALL AIR FORCE BASE, FLORIDA 32403

Prepared by: Oak Ridge National Laboratory,
Oak Ridge, Tennessee 37831-2008

OAK RIDGE NATIONAL LABORATORY
CENTRAL RESEARCH LIBRARY
CIRCULATION SECTION
4500N ROOM 175
LIBRARY LOAN COPY
DO NOT TRANSFER TO ANOTHER PERSON
If you wish someone else to see this report, send in name with report and the library will arrange a loan.

Printed in the United States of America. Available from
National Technical Information Service
U.S. Department of Commerce
5285 Port Royal Road, Springfield, Virginia 22161
NTIS price codes—Printed Copy: A05 Microfiche A01

This report was prepared as an account of work sponsored by an agency of the United States Government. Neither the United States Government nor any agency thereof, nor any of their employees, makes any warranty, express or implied, or assumes any legal liability or responsibility for the accuracy, completeness, or usefulness of any information, apparatus, product, or process disclosed, or represents that its use would not infringe privately owned rights. Reference herein to any specific commercial product, process, or service by trade name, trademark, manufacturer, or otherwise, does not necessarily constitute or imply its endorsement, recommendation, or favoring by the United States Government or any agency thereof. The views and opinions of authors expressed herein do not necessarily state or reflect those of the United States Government or any agency thereof.

ORNL-6520

Decision Guide For Roof Slope Selection

T. R. Sharp
R. L. Wendt
J. E. McCorkle*

*Consultant

October 1988

Prepared for the
AIR FORCE ENGINEERING AND SERVICES CENTER
Tyndall Air Force Base, Florida 32403
under Interagency Agreement
DOE No. 40-1489-84
USAF Project Order No. F 86-49

Prepared by the
OAK RIDGE NATIONAL LABORATORY
Oak Ridge, Tennessee 37831-6285
operated by
MARTIN MARIETTA ENERGY SYSTEMS, INC.
for the
U.S. DEPARTMENT OF ENERGY
under Contract No. DE-AC05-84OR21400

MARTIN MARIETTA ENERGY SYSTEMS LIBRARIES

3 4456 0291324 8

CONTENTS

SUMMARY: Spending Dollars Wisely on Roof Slope v

PURPOSE ix

HOW TO USE THIS GUIDE ix

1. WHY AND HOW MUCH TO SLOPE ROOFS? 1-1
   - Two Approaches to Roofing 1-1
   - The Impact of Slope 1-3
   - Experience as a Guide for Roof Slope Selection 1-4
   - Noneconomic Slope Factors 1-6
   - References 1-10

2. SLOPE MODIFICATION DURING WATERPROOF ROOF REPLACEMENT 2-1
   - No Change from the Existing Slope 2-1
   - Addition of Slope 2-2
   - Conversion from Waterproof to Metal or Watershed System 2-5
   - Example: Roof Conversion Evaluation—Airmen's Dormitory 2-6
   - Example: Choosing the Best Roof Replacement Option—Communications Building 2-9
   - Checklist of Items to be Considered 2-12
   - References 2-14

3. LIFE-CYCLE COSTING AND FACTORS INFLUENCING ROOF COSTS 3-1
   - LCC Analysis Methodology 3-1
   - Indirect Costs of Roof System Failure 3-3
   - Initial Cost 3-4
   - Example: Airmen's Club BUR Slope Evalaution 3-15
   - Example: Airmen's Dormitory Roof Option Evaluation 3-18
   - Maintenance Cost 3-20
   - Roof Life 3-22
   - References 3-25

4. LIFE-CYCLE COSTING OF ROOFS 4-1
   - LCC of Roofing Options 4-1
   - LCC for New Construction 4-2
   - LCC for Replacement of Waterproof Roofs 4-4
   - Example: LCC of New Construction—Airmen's Club 4-5
   - Example: LCC of New Construction—Airmen's Dormitory 4-7
   - Example: LCC of Slope Increase During Roof Replacement 4-8
   - LCC for Conversion to Watershed Roofs 4-10
   - Example: LCC of Roof Conversion—Airmen's Dormitory 4-10
   - Example: LCC of Roof Conversion—Communications Building 4-12

APPENDIX—ORNL Survey of Air Force BUR Maintenance Costs and Lives A-1

Summary:
SPENDING DOLLARS WISELY ON ROOF SLOPE

Built-up roofs (BURs) with positive drainage have somewhat longer projected membrane lives than "dead flat" roofs.

Projected roof life data from 12 Air Force installations was analyzed by the Oak Ridge National Laboratory (ORNL). The roofs with positive drainage were projected to last 21.3 years for asphalt BURs and 26.1 years for coal tar BURs. Dead flat roofs had projected lives of 20.3 years for asphalt and 25.7 years for coal tar (see Sect. 3). Coal tar roofs in the sample analyzed were older than the asphalt roofs. The method of projecting roof life used by the Air Force will show longer projected lives for older roofs when they are compared with newer roofs in equal conditions. These extended lives have relatively little effect on most life-cycle costing (LCC) analyses because of the impact of discounting.

Providing positive drainage for BURs on new buildings has little impact on their initial cost and is usually cost effective on an LCC basis.

An analysis of the impact of increasing roof slope to 1/4 in./ft or even 1/2 in./ft shows that there is very little additional construction cost to the building (see Sect. 3). The sloped-roof system (membrane, insulation, deck, and structure) costs are virtually the same as those for a flat roof. The building closure costs (added wall heights to enclose the roof) do increase but are generally minor at this slope range. The increase in membrane life and lower maintenance costs usually offset the additional cost and make positive drainage in this slope range cost effective (see Sect. 4).

Increasing the slope of asphalt BURs on new buildings from 1/4 up to 1 in./ft *appears* to reduce repair costs and *does* increase the projected membrane lives, but it also increases the initial cost and frequently is not cost effective on an LCC basis.

On the basis of the ORNL survey of Air Force BURs, it *appears* that increasing the slope of asphalt BURs up to 1 in./ft reduces maintenance costs while also extending the membrane lives from 21.3 to 21.5 years at 1/2 in./ft and 21.6 years at 1 in./ft (see Sect. 3). Unfortunately, the size and accuracy of the sample were not great enough to permit definitive conclusions to be reached. As shown in Sect. 4, a 1-in./ft slope can cost much more than lower slopes and cannot be cost justified on the basis of these apparent long-term savings.

Increasing the slope of asphalt BURs on new buildings above 1 in./ft *appears* to have little impact on the maintenance costs and projected membrane lives. It *does,* however, have a major impact on the initial cost and is not cost effective on an LCC basis.

The ORNL survey showed no definitive maintenance cost savings or projected life benefits occurring as a result of increasing BUR slopes to the 1- to 3-in./ft range. An example in Sect. 4 illustrates how the initial cost can significantly increase in this range. This added cost is not offset by any long-term savings and is therefore not cost effective.

Relatively small changes in the design of a BUR can minimize the impact of roof leaks.

Keeping roof penetrations, joints, and other breaks in the roof membrane out of drainage or wet areas (e.g., valleys), as described in Sect. 1, will markedly reduce the impact of a failure. Installing crickets, saddles, or additional roof drains where water buildup could occur can greatly reduce the severity of a failure. The cost of these changes is small and is usually cost effective on an LCC basis.

Increasing the slope of entire BURs during replacement is more costly than replacement in kind and may not be cost effective on an LCC basis.

To increase the slope of an entire BUR during replacement usually requires the installation of tapered insulation to provide an additional 1/4-in./ft slope, as described in Sect. 2. Tapered insulation costs significantly (about 30%) more than flat insulation for the same R-value. Whether or not these added replacement costs can be offset by long-term savings depends on many building-specific factors. The existing roof must be thoroughly assessed to determine whether added roof slope will reduce maintenance cost, or extend membrane life, or both. These potential long-term savings must be significant because they are discounted against the increased initial cost in the LCC analysis.

Most BUR failures involve flashing problems that can be compounded by inadequate roof drainage but are not impacted by further increasing the roof slope once positive drainage is achieved.

The *Air Force Manual, Built-up Roof Management Program* (AFM 91-36), states that about 90% of the problems encountered on Air Force BURs are problems with flashing. If a BUR does not have positive drainage (i.e., has ponded water), as described in Sect. 1, it is very likely that leaks resulting from flashing failures will be more frequent and severe. If a BUR does have positive drainage (slope of 1/4 in./ft), leaks will be less frequent and severe. Increasing roof slope further does not proportionally reduce the impact of leaks. Positive drainage is not, however, a substitute for the proper design, installation, and maintenance of roofing details—in particular flashing.

Conversion of smaller buildings from BURs to a watershed systems (metal or shingle) can be competitive on an initial cost basis with BUR replacement in kind. From an LCC viewpoint, conversion can be very attractive.

Many smaller buildings, as described in Sect. 2, can be converted to watershed roof systems at a cost equal to or below that of removing and replacing existing BURs in kind. This cost benefit is due primarily to the lower cost of the under-deck insulation commonly used in watershed systems (batts or blown) and the potential to avoid roof tear-off costs if the existing roof insulation is not wet. Shingles also cost less than BUR membranes. These savings offset the cost of an additional roof structure and deck. Watershed roofs generally have very low maintenance costs and last as long as or longer than BURs. These added savings frequently make conversion a cost-effective option.

Increasing the slope of new watershed and metal roofs above the minimum required to function properly costs more initially and offers no long-term savings.

The survey of roof experts and review of publications done as part of the preparation of this guide identified no potential long-term cost savings that could be attributed to increasing the overall

slope of watershed or metal roofs above that required for proper functioning. The minimum slope required to function properly will vary with roof system and the installation's climate. Localized drainage problems, such as adjacent to a chimney, can occur regardless of slope and should be avoided by installing a cricket. The initial cost increases proportionally with the increase in roof surface area (see Sect. 3). In addition, a surcharge (about 50%) is added to the labor costs for steeply sloped shingle roofs. Steeply sloped metal roofs are longer than their lower-sloped counterparts. A significant increase in length can raise maintenance costs because of increased movement (expansion and contraction), which enlarges the holes (creating potential leaks) if through-the-roof fasteners are used.

DECISION GUIDE FOR ROOF SLOPE SELECTION

PURPOSE

This decision guide has been written for personnel who are responsible for the design, construction, and replacement of Air Force roofs. It provides the necessary information and analytical tools for making prudent and cost-effective decisions regarding the amount of slope to provide in various roofing situations. Because the expertise and experience of the decision makers will vary, the guide contains both basic slope-related concepts as well as more sophisticated technical data. This breadth of information enables the less experienced user to develop an understanding of roof slope issues before applying the more sophisticated analytical tools, while the experienced user can proceed directly to the technical sections.

Although much of this guide is devoted to the analysis of costs, it is not a cost-estimating document. It does, however, provide the reader with the relative costs of a variety of roof slope options; and it shows how to determine the relative cost-effectiveness of different options.

The selection of the proper roof slope coupled with good roof design, a quality installation, periodic inspection, and appropriate maintenance and repair will achieve the Air Force's objective of obtaining the best possible roofing value for its buildings.

HOW TO USE THIS GUIDE

As noted above, the use of this guide will vary with the individual reader's level of knowledge and experience with roofing issues. Inexperienced readers will find in Sect. 1 useful background about why and how much to slope roofs. Section 2 deals specifically with slope modification of waterproof roofs during replacement. Section 3 introduces life-cycle costing (LCC) and the factors that influence roof costs and addresses specific factors in depth, including initial cost, maintenance costs, and roof life. Section 4 shows how to put all the factors together in an LCC analysis.

Experienced readers may want to scan Sects. 2 and 3 as background and begin directly with the LCC analysis in Sect. 4 for new roofs or roof replacement options.

The reader is also invited to communicate with HQ AFESC/DEMM with comments or questions or if they have developed other potential input data such as initial costs, maintenance costs, or roof life expectancies.

HQ AFESC/DEMM
Tyndall AFB, FL 32403-6001
Telephone: (904) 283-6344
AUTOVON 523-6344

Section 1
WHY AND HOW MUCH TO SLOPE ROOFS?

TWO APPROACHES TO ROOFING

The simplest answer to the question "Why slope roofs?" is to encourage the water to drain from the roof. But then the question arises "Why drain roofs?" This question requires that a distinction be drawn between two very different approaches to roofing. Virtually all roofing systems can be classed as either waterproof or watershed. Figure 1-1 illustrates conceptually the differences between the two approaches. Waterproof

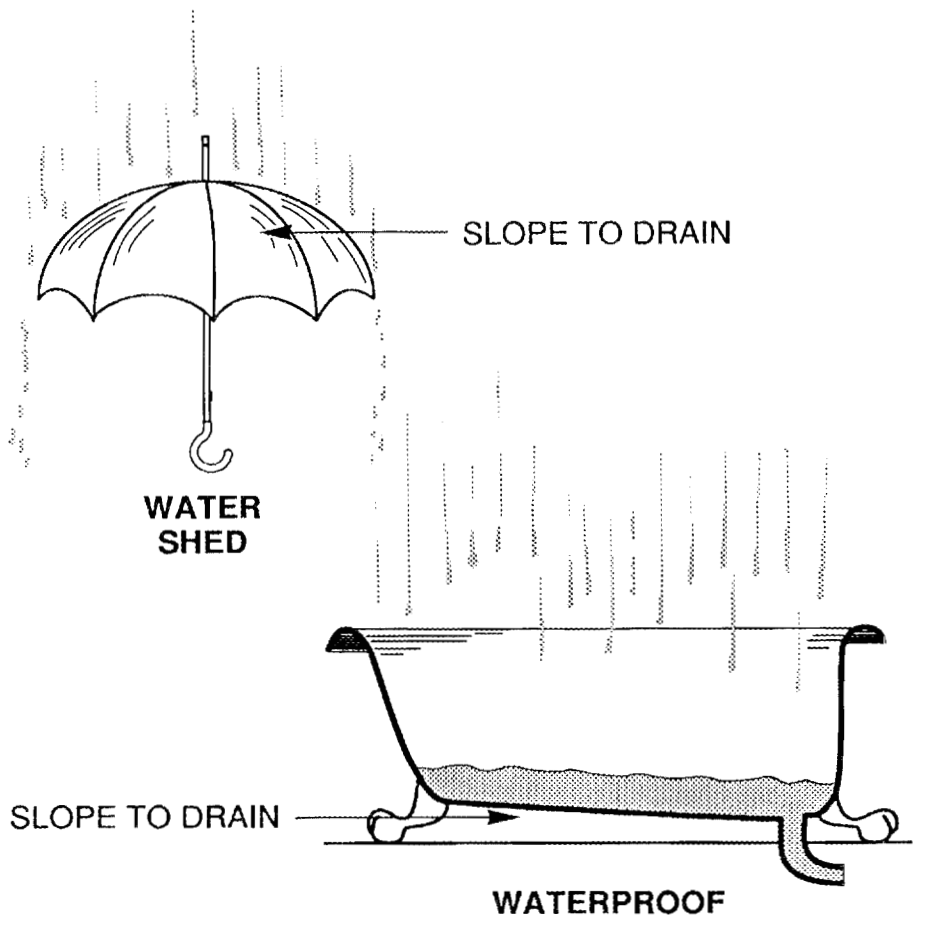

Fig. 1-1. Waterproof roofs, like the bathtub, rely on a *continuous impenetrable membrane to hold water* until gravity can drain it away. Some waterproof roofs in the past have been designed to hold water continuously (like the tub with the stopper in place), but this is not current practice. Watershed roofs, like the umbrella, rely on the *pull of gravity to remove water* before it can penetrate to the area below. These represent the two distinctly differing approaches to roofing.

roof systems provide a continuous, impenetrable membrane that enables the roof to hold water until it can be removed by the drainage system. A watershed roof system, on the other hand, contains numerous individual "membranes" (shingles) that create many penetrations; so the water must be removed before it can penetrate through the membranes. These basic differences in approach have a profound impact on the question "Why drain roofs?"

Waterproof Roof Systems

Waterproof systems include the various built-up roofs (BURs), single-ply roofs, and some forms of metal roofing. They are frequently referred to as low-sloped roofs. The slope of waterproof roofs typically ranges from "dead flat" to 1/2-in./ft, although steeper slopes occur. The reasons for draining a waterproof roof include

- reducing the impact of potential roof membrane failures (leaks) by removing the water before it penetrates through to the building (Fig. 1-2),
- increasing roof membrane and insulation life by minimizing any deterioration of the membrane from continuous exposure to water, and
- reducing the imposed, or "live," loading of the roof by minimizing ponding.

Watershed Roof Systems

Watershed systems include all forms of "shingle" roofs (e.g., asphalt, metal, tile, wood shake) and some forms of metal roofing. The slope of watershed roofs typically ranges upwards from 4 in./ft. Steeper slopes occur primarily in severe winter areas where there is potential for heavy snow loading. The reasons for draining/sloping a watershed roof include

- preventing water from entering the building through joints in the roof membrane (Fig. 1-3);

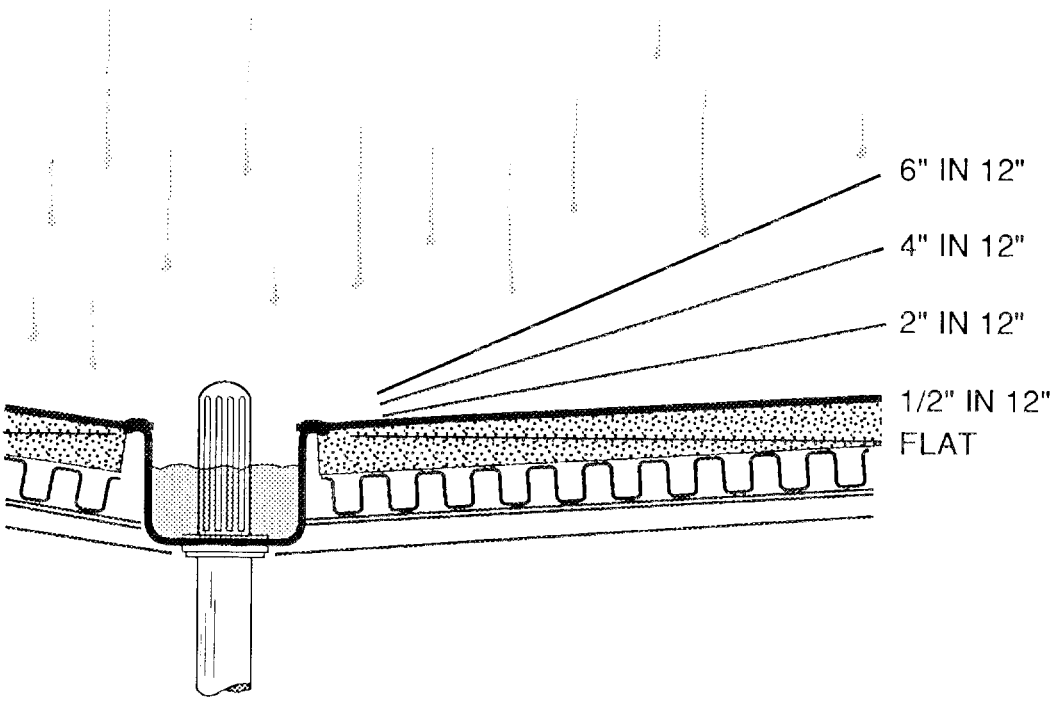

Fig. 1-2. The slope of a waterproof roof enables gravity to move water to the drains. Once a positive slope has been achieved, increasing the slope only increases the rate of runoff and the potential size of a pond should the drain become plugged.

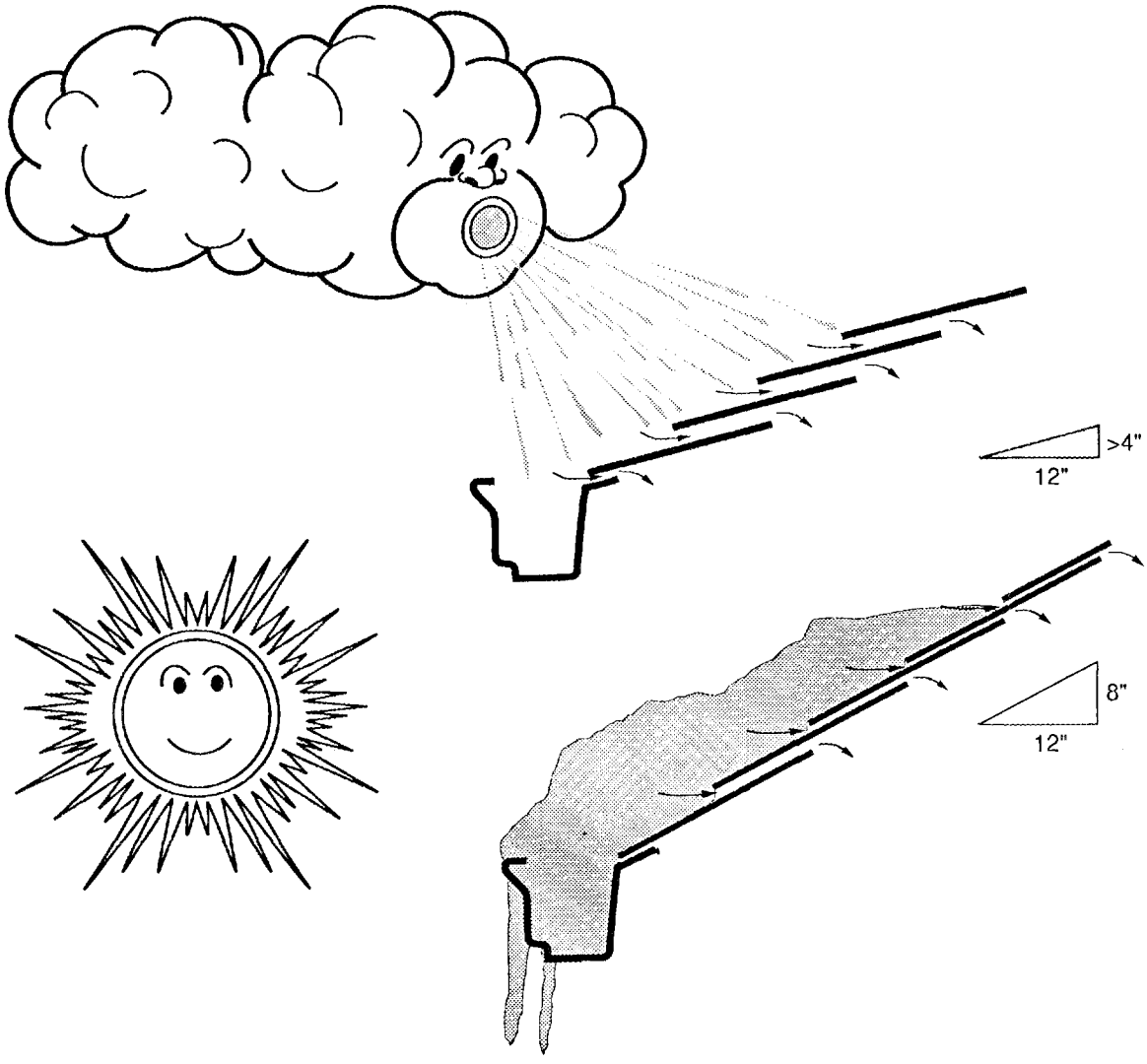

Fig. 1-3. The slope of a watershed roof is essential since the pull of gravity must overcome the impact of wind and capillary action before water penetrates the joints in the roof's multiple membranes. Increased roof slope in severe winter areas reduces the amount of roof area subject to ice damming problems and reduces the roof's live load due to snow buildup.

- reducing the imposed, or live, loading of the roof from snow buildup; and
- reducing the amount of roof area requiring protection from ice dams in severe winter areas.

THE IMPACT OF SLOPE

Waterproof systems generally benefit from being sloped. Coal tar BURs have very stringent limits on the amount of slope that can be provided because of the flow characteristics of the coal tar at higher temperatures (i.e., it will slide off the roof). Asphalt BURs permit a greater range of slopes because they have higher softening temperatures and are therefore less likely to slide. Single-ply roofs are generally less restrictive to slope than coal tar and asphalt BURs. Standing-seam metal roofs approach being a waterproof system. However, because they have multiple joints (seams), some slope

is essential to the proper functioning of the roof. In all cases, appropriate slope can and does improve performance.

Watershed systems require slope for the roof membrane to function. The question here is not *whether* to provide slope but *how much*. Unlike the materials considerations that greatly determine the slope of waterproof roofs, climatic concerns are more important factors in determining the slope of watershed roofs.

The remainder of this document will focus on the issue of roof slope as it relates to both approaches to roofing and will develop a method of evaluating the most appropriate amount of slope to be provided on the basis of life-cycle costing.

EXPERIENCE AS A GUIDE FOR ROOF SLOPE SELECTION

In addition to the question "Why slope roofs?" is an important concern for "How much roof slope should be provided?"

Are Flat Roofs Adequate?

The importance of adequate slope to ensure good drainage is well recognized—for example, in the plumbing industry; years ago, building codes adopted a 1/4-in./ft minimum slope for plumbing drain lines. It is also generally recognized in the roofing industry that adequate slope is important to minimize leak problems. However, manufacturers of coal tar pitch built-up roofing and some single-ply membranes assert and guarantee that their membranes will perform satisfactorily even under ponded water. This has encouraged some designers to avoid roof slope to minimize initial costs.

A perfect membrane is necessary to prevent leaks and roof damage under ponded water. It is, however, very difficult—even with excellent materials and construction and regular roof maintenance—to prevent the occurrence of roof defects. Thus, water penetration will likely occur sometime during the life of a flat roof.

Most roof leaks are fed from relatively small leak sources. They typically develop at flashings from normal building movement or from punctures due to rooftop traffic or debris. When these minor leak sources are located in areas with good drainage (e.g., an open flashing well away from any ponding), they usually do not even become a reported roof leak. In contrast, similar minor leak sources become serious leaks and can cause major damage to a roofing system when they occur in ponded areas or other low areas where water concentrates on the roof. It is especially important to provide positive drainage in critical areas, such as around flashings, where the risk of a leak is greater.

Furthermore, roof designers should recognize that membrane deterioration and wetted interior fixtures are not the only potential economic losses caused by water ponding. Today's BURs have a high investment in insulation (30 to 50% of the initial cost) that should be protected. Ponding increases the chance for water entry into the insulation. The lack of adequate slope causes this water to spread under the membrane and can severely reduce the thermal efficiency of a large area of roof. When low-sloped roofs are eventually torn off, it is not uncommon to find insulation waterlogged only in the ponded areas of the roof and dry everywhere else except directly under isolated roof leaks. Deck rotting or corrosion and fastener corrosion are also more frequent under ponded roof areas.

Is More Roof Slope Better?

Frequently, roof slope selection can be based on personal perceptions rather than on objective technical information. Both casual observers (Fig. 1-4) and experienced roofing personnel recognize that shingled, watershed roofs are usually more durable and leak free than waterproof roofs and that standing water (ponding) problems are significantly reduced by even a small amount of roof slope. Unfortunately, these observations can lead to the false conclusion that even more roof slope is better. One purpose of this decision guide is to provide an objective basis

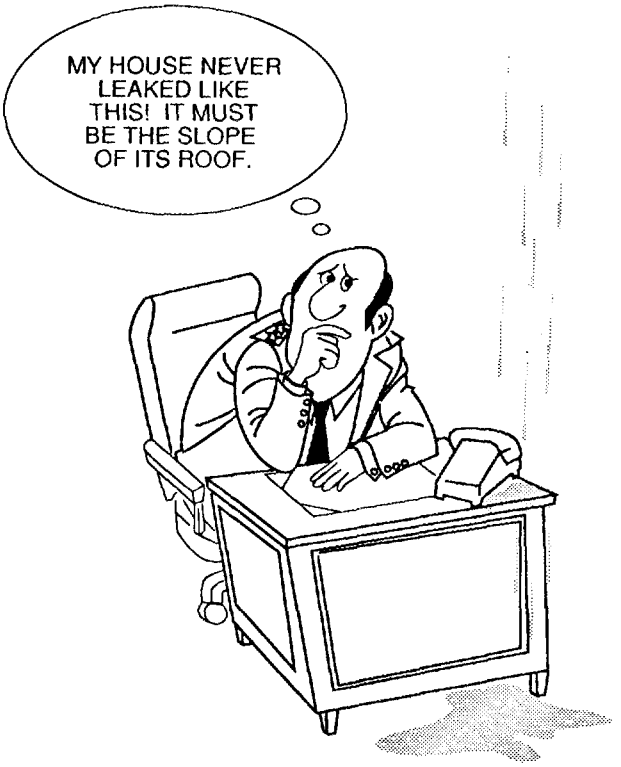

Fig. 1-4. When confronted with a leaking low-slope roof, it is normal to wonder if there is a better way.

for the selection of optimum roof slope for both new and replacement roofs.

Roof Slope Selection

Documented research on roof slope optimization is almost nonexistent, but years of field experience with both watershed and waterproof roofs provide the following guides:

- **1/4-in./ft minimum slope for waterproof roofs**

  The severity of a leak in ponded areas is proportional to the volume of ponded water. The volume of ponded water in turn depends on the area of ponding and the square of the depth if the ponded area is roughly circular and the ponded depression has a spherical curvature. As a result, ponding 1 in. deep will provide approximately 16 times as much water for intrusion as ponding 1/4 in. deep. Thus, it is important that the depth of any ponding be minimized.

  On roofs designed with little or no slope, roof depressions that lead to ponding are frequently produced by the normal deflection of the roof deck between supports, by construction inaccuracies, and by the common practice of locating roof drains near columns, where the highest deck elevations tend to occur. Ponded areas are also caused by locating rooftop equipment or other features, where they act like water dams, and by uneven building settlement. Experience has shown that most of these sources of ponding can be eliminated or minimized by using a 1/4-in./ft minimum roof slope.

  Current Air Force design requirements for new roof construction require a 1/4-in./ft minimum slope. However, about 25% of existing Air Force roofs do not meet this minimum slope requirement and should be carefully evaluated for slope modification (see Sect. 2) when they are scheduled for replacement.

  The importance of a 1/4-in./ft minimum roof slope has been supported in roof studies. In an analysis of 86 randomly selected waterproof roofs, a Montreal building consultant found that 39 of 67 roofs (58%) with a slope of less than 1/4 in./ft had leak problems.[1] In contrast, only 2 of 19 roofs (11%) with slopes of 1/4 in./ft or greater had leaks.

- **4 in./ft needed on watershed roofs**

  The Asphalt Roofing Manufacturers Association requires special waterproof underlayment procedures when asphalt strip shingles are installed on slopes between 2 and 4 in./ft or wherever there is a possibility of ice damming along roof eaves regardless of roof slope. Even with the special waterproof underlayment procedures, the use of asphalt strip

shingles is not approved on slopes less than 2 in./ft. These requirements, based on years of field experience, suggest that lifetime trouble-free performance cannot be expected on watershed roof slopes of less than 4 in./ft.

Proper Drainage Design Around Roof Penetrations Is Crucial

Regardless of slope, the majority of roof leaks occur at roof penetrations and terminations, especially those involving a metal component (e.g., flashing) because of differing thermal expansion and contraction characteristics. The severity of leaks at roof details is usually slope related (the lower the slope, the greater the problem). Water diverters (e.g., crickets, see Sect. 2, Fig. 2-1) are needed on the high side of roof penetrations, even on very steep slopes, to prevent water intrusion.

It is very important to avoid locating roof penetrations in areas that pond or collect water. Failure to do so can cause serious problems, especially on waterproof roofs with slopes less than 1/4 in./ft. The location of rooftop equipment and the design of penetrations should be governed by the best industry-recommended design practice and roof details for both waterproof and low-sloped metal roofs.

The most common leak problems on steep, watershed roofs occur at large penetrations, like chimneys, when crickets are not installed. Improper design or installation of valleys, eaves, and gutters or inadequate maintenance that allows debris to accumulate on a roof and act as a dam can also cause problems even on roofs with slopes greater than 4 in./ft.

Optimum roof slope selection for specific roofs depends upon the general guidelines given above, as well as on a thorough evaluation of life-cycle costs. Also important is the influence of the non-economic slope-related factors given in the remainder of this section.

NONECONOMIC SLOPE FACTORS

The following noneconomic factors influence the choice of roof slope on a specific building:

- roof materials,
- climate,
- building codes,
- aesthetics,
- building function/design, and
- roof drainage.

Materials

Slope selection is dictated in part by the type of roofing material used. Slope limitations associated with the water resistance characteristics of three general categories of roofing materials (waterproof membrane, metal, watershed) used on Air Force roofs are given in Fig. 1-5. The range of slopes indicated in Fig. 1-5 shows both standard practice and the extremes of acceptable slope for each generic type of roofing listed. In some cases, the maximum slope requires special application and design conditions for acceptability. Specification of a particular roofing product and slope must be checked for compliance with manufacturer's requirements to ensure product guarantees. The physical limitations at the upper and lower ends of the slope range for each generic type of roofing are summarized under "Comments" in Fig. 1-5.

Climate

Climatic conditions influence both slope and roofing material selection. The National Bureau of Standards has recommended for many years that the softest asphalt commensurate with slope and climate should be specified to achieve the best BUR performance and durability.

Slope selection is greatly affected in cold climates by the need to accommodate ice-dam ponding and to reduce snow loading. Just as water ponding poses a major leak

hazard to waterproof roofs with slopes below 1/4 in./ft, ice-dam melt and ponding pose a similar hazard on lower sloped watershed roofs. For this reason, watershed roofing must have special watertight underlayment protection on slopes between 2 and 4 in./ft and ice-dam eave protection on even greater slopes in colder regions of the United States.

Careful drainage design is essential in cold climates for waterproof roofs at any slope. Proper location of drains and scuppers in relation to sun and shade is needed to prevent the drains from becoming blocked by snow and ice. It is also essential to use a sumped drain design with tapered insulation in the drain sump so that building heat loss will help to melt ice and snow near the drain and keep it clear.

Snow loading is another slope-related concern. The recent trend to higher performance thermal insulation greatly slows snowmelt and, as a result, can increase snow loading. The related structural concerns can be accommodated by under-deck structural strengthening, as well as by increased roof slope to encourage heavy snow deposits to slide off the roof. Consequently, the low-friction characteristics of steep metal roofing provide this advantage, but extra precautions are essential to prevent the dangers of snow or icicles falling or snow melt causing icing conditions on walkways below.

Climate also influences the choice between fiberglass and organic asphalt shingles. Fiberglass shingles are generally preferred because they have a Class A fire rating and are more blister resistant and generally more durable. However, fiberglass shingles are more brittle than organic shingles, making them more difficult to install without damage in cold climates.

Codes

Roof slope design decisions can be influenced by fire performance and to some extent by wind performance requirements in building codes. Although some general guidelines can be cited (see Fig. 1-5, Code Considerations) regarding roof slope and fire requirements for different roofing materials, specific approvals must be based on roof systems listed in the latest Underwriters' Laboratories *Building Materials Directory*.[2]

Aesthetics

Roof appearance is an important aesthetic consideration for many buildings, especially single-story structures, and can be a significant influence on a roof slope decision. One option is to install a steep, highly visible, watershed roof consisting of shingles, shakes, tiles, or colored-metal roofing that has architectural appeal and even accents the design of buildings. When waterproof roofs (especially bituminous membranes) are required, increasing the roof slope makes both the roofing and rooftop equipment more visible from the ground. If this increased roof slope creates aesthetic problems, expensive equipment enclosures or penthouse structures and higher parapet walls may be required for screening.

Building Function/Design

The building's function and its design (size, configuration, and use of roof area) have an important impact on roof slope selection. Some buildings, such as hangars and warehouses, require large expansive roofs. Large clear spans are also sometimes functionally required. The costs and other difficulties of providing increased slope on these roofs is greater than on smaller structures.

Buildings with a complex configuration (footprint) will be more difficult to roof with a watershed system (because of the numerous ridges, valleys, hips, and gables) than a low-sloped waterproof system.

If roof-mounted equipment is a requirement of the building, it will become more costly and difficult to install as the slope of a low-sloped waterproof roof is increased. Roof-mounted equipment on watershed systems is not a normal approach because of the difficulty of working on the steep slope and because attic space is frequently available.

WATERPROOF MEMBRANE ROOFING	SLOPE (INCHES/FOOT) 0 1 2 3 4 5 6 7 8 9	COMMENTS	CODE RESTRICTIONS
Built-up			
Asphalt – 4-ply/gravel		Membrane slippage due to weight of surfacing and type of asphalt govern slope limits. Aggregate surfacing is not suitable over 3 in./ft. The maximum slope for Type I asphalt is 1/2 in./ft, for Type II 1 1/2 in./ft except in hot climates, for Type III no limits except in very hot climate where Type IV is needed.	Class A approval is achieved on slopes of 3 in./ft or less.
Asphalt – 4-ply/cap sheet		Slippage limits slope to maximum 3 in./ft but cap sheet is used for vertical flashing with adequate top nailing.	Class A or B rating can be achieved on slopes of 3 in./ft or less for noncombustible deck construction. Class A or B rating can be achieved on slopes of 1/2 to 1 in./ft for combustible deck construction.
Coal tar pitch – 4-ply/gravel		Current Air Force criteria limit the use of coal tar to roofs with slopes of 1/8 in./ft or less. Cold flow and slippage limit slope to 1/4 in./ft with fiberglass reinforcement and 1/2 in./ft with organic felt reinforcement in most climates. Slopes over 1/4 in./ft in hot climates are not recommended.	Aggregate surfacing permits Class A rating on slopes of 3 in./ft or less, but the cold flow, slippage characteristics limit slope to 1/2 in./ft
Single-ply			
Modified bitumen – smooth coated		No limit either end of the slope range.	With field-applied fire-resistant coatings, Class A or B rating can be achieved for use over noncombustible decks generally up to 1 in./ft maximum slope. Class A or B rating can be achieved for use over combustible decks with additional ply sheets and/or insulations generally up to 1/2 in./ft maximum slope.
Modified bitumen – granular		Slippage limits slope to maximum 3 in./ft but granule-surfaced membrane is used for vertical flashing with adequate top nailing.	Class A or B rating can be achieved for use over noncombustible decks generally up to 1 in./ft maximum slope. Class A or B rating can be achieved for use over combustible decks with additional ply sheets and/or insulations generally up to 1/4 in./ft maximum slope.
EPDM – smooth surfaced/ mechanically attached or fully adhered		No limit on either end of the slope range.	Class A or B rating can be achieved over noncombustible decks with fire-retardant formulated grades generally on slopes of 1/2 in./ft or less. Class A or B rating can be achieved over combustible decks with ply sheets and/or insulations generally up to 1/2-in./ft maximum slope.
EPDM – Ballasted		Gravity displacement of ballast limits slope to maximum 2 in./ft.	Ballast, needed for wind protection, provides Class A rating on slopes up to 2 in./ft for noncombustible and combustible decks when used at 900 to 1000 lb per 100 ft^2.
Hypalon, CPE, Reinf. PVC – smooth surfaced/ mechanically attached or fully adhered		No limit on either end of the slope range.	Class A or B rating can be achieved for reinforced PVC for use over noncombustible decks generally up to 1-in./ft maximum slope. Class A or B rating can be achieved over combustible decks with ply sheets and/or insulations generally up to 1-in./ft maximum slope. Class A or B rating can be achieved for Hypalon or CPE for use over noncombustible decks generally up

		to 2-in./ft maximum slope. Class A or B rating can be achieved over combustible decks with ply sheets, slip sheets, and/or insulations generally up to 2-in./ft maximum slope.
Hypalon, CPE, reinforced PVC – ballasted	Gravity displacement of ballast limits slope to maximum 2 in./ft.	Ballast, needed for wind protection, provides Class A rating on slopes up to 2 in./ft for noncombustible and combustible decks when used at 900 to 1000 lb per 100 ft^2.
METAL ROOFING		
Standing Seams	Product design generally overcomes the seam leak concerns with lap-seam metal roofing, but minimum 1/4-in./ft slope is specified to provide positive drainage and prevent corrosion of surface.	No insulated (underside) metal roofing systems has Class A or B rating essentially because of inherent properties of painted galvanized steel. Code acceptance is primarily based upon uplift considerations. Also code acceptance is based upon inclusion of fiberglass blanket insulations. Applications of metal roofing over a combustible deck does not have UL approval, because it has not been fire tested.
Lap Seams	Relatively short roof spans and well-constructed purlin systems are necessary to minimize thermal expansion problems and resulting leaks at through-fasteners. Seam leak concerns limit industry acceptance to 1/2-in./ft minimum slope. No upper slope limit.	Same as standing seam.
WATERSHED ROOFING		
Singles		
Asphalt – Fiberglass Class A	Materials require minimum 4-in./ft slope to prevent leakage. If watertight underlayment is used, minimum 2-in./ft slope is accepted. No upper limit on slope, except that field-applied tab seal wind protection must be provided on slopes over 21 in./ft.	Class A rating on slopes suitable for watershed protection.
Asphalt – Organic, Class C	Same as Class A.	Class C rating on slopes suitable for watershed protection.
Shakes – Wood	Materials require minimum 4-in./ft slope to prevent leakage.	None have Class A. Several manufactures have Class B using special fire-resistant treatments for the wood in conjunction with aspecial steel-foil underlayment.
Tiles – Cementitious, clay, and metal	Materials require minimum 4-in./ft slope to prevent leakage.	Some cement tiles cannot pass Class A or B fire tests, but several proprietary types have a Class A rating over plywood with or without felt underlayments as specified by installation instructions. Clay tile has code acceptance based on inherent properties. It does not have UL approval, because it has not been fire tested. Aluminum and steel tile products have Class A rating when used in conjunction with multiple underlayment felts or over gypsum board.

Standard practice
Also applicable

EPDM = ethylene-propylene-diene monomer, CPE = chlorinated polyethylene, PVC = polyvinylchloride, UL = Undewriters' Laboratories, Inc.
Source of Code Restrictions: Underwriters' Laboratories, Inc., Northbrook, Ill., January 1988.

Fig. 1-5. Roof slopes for various materials.

For these reasons, it is not uncommon for the building's function/design to dictate the type of roof and, to a lesser extent, the amount of slope provided.

Roof Drainage

The overall roof drainage design impacts the choice of roof slope and type of roofing materials. When deciding how to drain a roof, the designer must choose between interior and peripheral drainage systems. In an interior drainage system, rainwater flows from elevated peripheral areas to interior roof drains. Leaders conduct the rainwater down through the building's interior. In a peripheral system, rainwater flows from elevated interior areas to peripheral low points and through scuppers or gutters to leaders generally located outside the building.

Interior drainage is usually selected for waterproof roofs. On buildings that are wide and long, water travel distance often dictates the use of internal drainage. Interior drainage also has several advantages over peripheral systems on low-sloped roofs. Drain pipes are warmed by the building's interior and continue to carry water and melting snow in cold weather. Peripheral drainage systems, on the other hand, can freeze in winter weather, and roof areas are more vulnerable to ice-damming.

Multiple roof sections with an inverted pyramid geometry for four-way slope into central drains may be needed on large roofs to provide needed roof slope. Roofs with this design and roofs with parapet walls have the potential, if interior drains become clogged, to build up water to a depth that can cause flashing leaks or even roof collapse. Regular maintenance to keep primary drains and overflow drainage clear is critically important for successful roof performance. Overflow interior drains set 2 in. above the general roof elevation and connected through separate drainage lines or peripheral overflow scuppers set no more than 4 in. above the general roof elevation should be provided and are even required by some building codes.

In contrast to low-sloped waterproof roofs, steep watershed roofs almost invariably use peripheral drainage. This type of drainage requires that one dimension of the building be relatively narrow, usually no more than 30 to 50 ft. Longer distances with steep roof slopes make the ridge line impractically high. The ice-dam and freeze-up potential of peripheral drainage on steep watershed roofs must be considered to ensure overflow protection and to avoid leak problems at the building perimeter. For example, when gutters are part of a peripheral drainage system, their vertical section should be at least 1 in. below the roof height and the gutter should be offset from the exterior surface of the building. Properly designed watershed roofs incorporating peripheral drainage typically provide almost trouble-free performance. As a result, conversion of existing low-sloped waterproof roofs to peripheral drainage watershed roofs is an important roof replacement option (see Sect. 2).

REFERENCES

1. C. W. Griffin, "Draining the Roof," Roofing Industry Educational Institute (originally appeared in *Roof Design*, March 1983).
2. *Building Materials Directory*, Underwriters' Laboratories, Inc., Northbrook, Ill., January 1988.

Section 2
SLOPE MODIFICATION DURING WATERPROOF ROOF REPLACEMENT

Buildings are usually reroofed several times during their lives. Reroofs provide opportunities to reconsider the amount of roof slope and its possible effects on roof performance. This section identifies the slope-related options during the roof replacement design decision-making process, discusses the implications of each option, and identifies the key issues of concern that must be addressed to select the most appropriate option.

The three options to consider during the roof replacement design decision process are

1. no change from the existing slope;
2. addition of slope
   a. in limited areas, or
   b. to the whole roof; and
3. conversion from a waterproof to a watershed system.

Discussion is limited to conventional low-sloped roof systems currently covered by BUR or single-ply membranes. Both metal systems and watershed roofing are considered as conversion options. Changing the slope of watershed roofs is not addressed because it generally involves replacement of structural elements of the building and has prohibitive costs. If problems exist because of inadequate slope in watershed roofs, the solution is typically to upgrade the roof by adding a waterproof membrane below the shingles.

NO CHANGE FROM THE EXISTING SLOPE

Modification of roof slope to improve drainage is not always the most appropriate roof replacement design strategy. Because a change in roof slope can add significantly to roof replacement cost, careful analysis of all information on leak sources and severity (see "Example: Choosing the Best Roof Replacement Option—Communications Building," later in this section) is required before the decision to modify slope can be made. The option to make no change in slope is appropriate when the following factors govern:

- The leak problems are caused by roof maintenance deficiences—Debris- or ice-clogged drains, scuppers, gutters, and leaders are frequent causes of water backup on roofs and can produce leaks. The failure to inspect and correct small roof defects before they become serious is also a cause of leaks. Although increasing the slope during reroofing might reduce the severity of such problems, it is less costly to correct these situations with an effective roof maintenance program than to invest in slope modification.
- The potential of a leak does not justify slope modification investment—Leak frequency and severity in warm, dry climates are substantially less than they are in cold or moist climates. Increased vulnerability to leaks in mild climates may be more acceptable than an investment in increased slope.
- The leak sources are not impacted by changing roof slope—Most roof leaks are caused by flashings or sources other than the roof membrane (e.g., heating, ventilating and air conditioning equipment, ducts, open coping joints, other wall defects above roof flashings, poorly

designed roof details, condensation problems). Flashings cause about 90% of roof leak problems.[1] These deficiencies should be corrected before or during the installation of a new roof. Roof slope modification will not solve these types of problems.

Techniques

A good roof replacement design that does not change roof slope should

1. evaluate (a) lowering the elevation of scuppers, drains, and gutters or (b) adding roof drains to eliminate ponded water;
2. consider relocating rooftop equipment away from roof drainage valleys; and
3. correct puncture problems caused by roof equipment maintenance traffic by installing roof walkways and controlling access to roof surfaces.

An investment in good design and application of roof details and flashings (recommended by the National Roofing Contractors Association and the Sheet Metal and Air Conditioning Contractors National Association) is essential for good roof performance regardless of slope.

ADDITION OF SLOPE

When the analysis of existing roof problems shows a causal relationship to ponding, slope modification should be considered as a roof replacement design strategy.

Most ponding situations can be corrected by increasing the roof slope to 1/4 in./ft, as required for Air Force new construction. However, slope and drainage modifications can be expensive. Frequently, this expense will limit the addition of slope to only the most critical areas of the building.

Techniques

Install Crickets and Saddles. Crickets and saddles can provide additional slope in limited areas and are the least expensive method of slope modification. They are sloped roofing overlays that divert water so it will flow to roof drains. Figure 2-1 shows where and how they are used. Crickets are used to eliminate ponding near walls or large roof penetrations that act like dams for water flow, while saddles are used in horizontal valleys between roof drains.

Crickets and saddles for adding slope are usually fabricated on the job from tapered roof insulation boards. They can also be made from plywood, and sheet metal is commonly used above chimneys on steep shingled roofs. Poured light-weight concrete is another approach to provide slope.

Installation of crickets and saddles is frequently a cost-effective procedure. They are commonly located in critical areas that are major leak sources, and they can greatly reduce leak problems. They are also relatively low in cost. A rough approximation of cricket or saddle cost construction with tapered roof insulation boards can be made by multiplying $1.50/sq. ft (using 1987 $) by the roof area covered by the overlay.

Although installation of crickets and saddles is an effective solution for many ponding problems, careful analysis of the problem is important to ensure that they function as intended. Ponding problems along roof edges with scuppers frequently cannot be corrected by crickets alone. It is often necessary to also lower the elevation of the scuppers.

Eliminate Localized Ponding. Localized ponding occurs in open areas of a roof. It commonly occurs at midspan between roof deck structural supports because of the deflection of the decking. Roof drains are often located near column roof supports where elevations are higher than in midspan roof areas. Figure 2-2 is a photograph of localized ponding with the area around the drain being high and dry.

Two methods are used to eliminate localized ponding. One involves filling a depressed area, usually with roof insulation. It may even be like a large cricket or saddle in design. The other method is the addition of roof drains at the locations of deepest

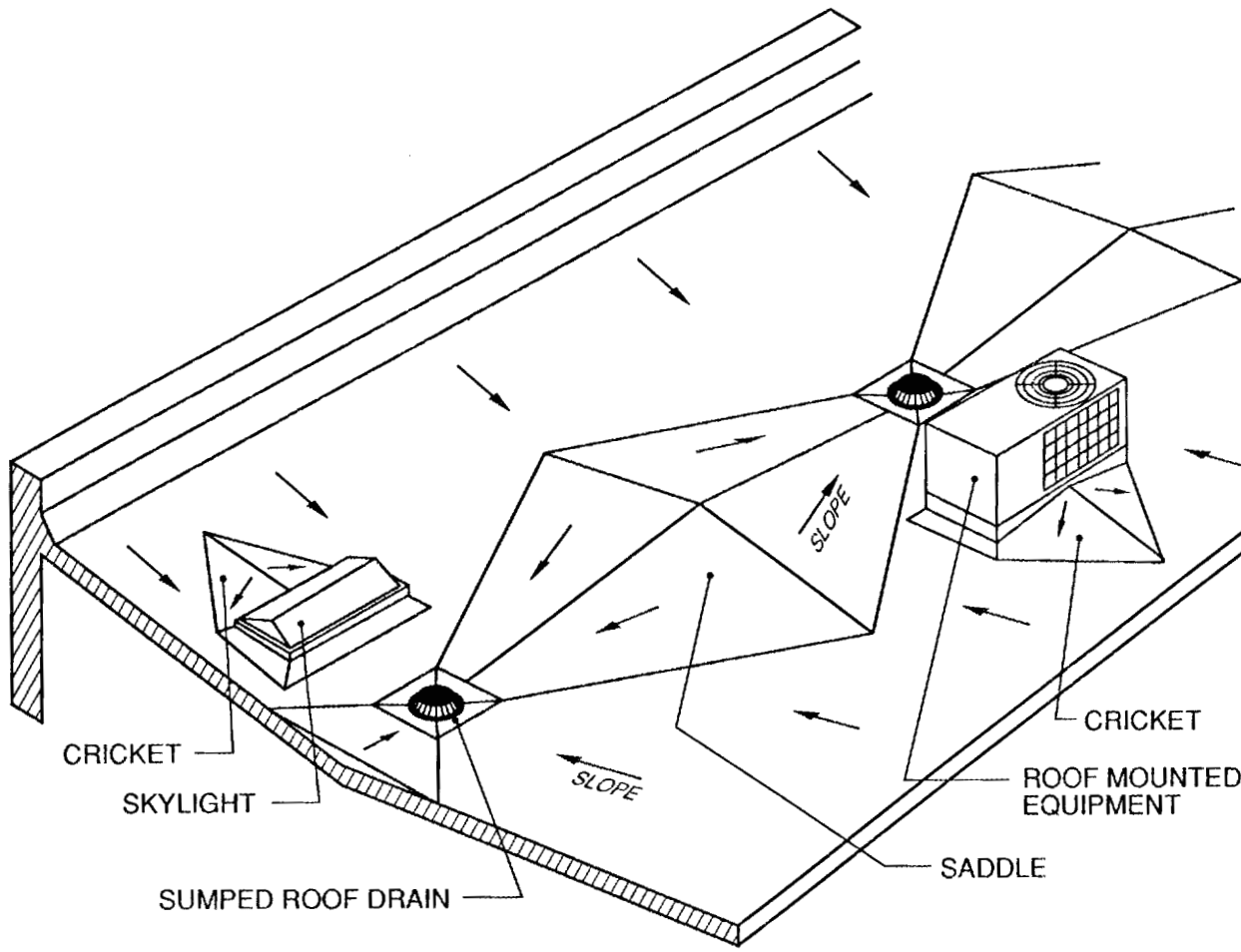

Fig. 2-1. Illustration of crickets and saddles.

ponding. An economic analysis of these two approaches is necessary to determine the more cost-effective option for a particular roof.

An approximate cost for slope correction with insulation fill can be obtained by multiplying the cost for flat insulation application shown in nationally recognized estimating guides by 1.35 for the area modified. The added factor of 0.35 is due to the higher cost of tapered insulation compared with flat insulation and the added cost for the field fabrication of multiple layers of relatively thin Air Force-approved types of tapered insulation.

The cost of an additional roof drain on a BUR is approximately $500 (material and labor, 1987 $) plus the cost of under-deck piping required for each specific situation. This approach is often the most practical and economical option if access is available for under-deck piping. The addition of drains can often be used as a substitute for crickets adjacent to rooftop equipment that blocks the flow of water to other roof drains.

Add Slope to Roof Membrane. This technique increases the slope over all or part of a roof. It is usually achieved by adding 1/4-in./ft tapered roof insulation during reroofing. The additional slope created by tapered insulation requires increased equipment curbs and parapet wall height. Service lines (electrical, water, drains, and refrigeration) must also be extended when

Fig. 2-2. Photograph of localized ponding.

equipment is raised; this work cannot be done by roofing tradesmen.

Roof shape and size also influence the cost of additional slope. More complex shapes and smaller roofs will cost proportionally more because of the added labor cost of cutting and fitting the insulation.

The approximate cost for adding tapered insulation is obtained by multiplying by 1.35 the cost of flat insulation (shown in nationally recognized estimating guides) having a thickness equal to the average thickness of the tapered insulation installed. This cost factor is based on roofing contractors' experience. The cost to raise equipment, curbs, and parapet walls must be added to obtain total cost. No general cost guideline can be used for adjusting equipment and wall heights because they vary on each building with the type of existing walls and the amount and location of rooftop equipment.

The addition of slope over an entire roof is the most costly alternative. It can be economically justified when the activities within the building are subject to costly interruption or damage of contents from roof leaks.

On large areas, it is necessary to divide the roof into separate drainage areas, each with its own central roof drain. Each area is limited to about a 50-ft dimension in each

direction so that the insulation thickness at the perimeter of a section will not be greater than the 6-in. limit set by the *Air Force Built-Up Roofing Repair/Replacement Guide Specification.*[2]

Dividing a roof into separate drainage areas involves two additional costs: one for perimeter curbing that has to be constructed around each drainage area and the other for the central roof drain that frequently is a new or relocated drain. An overflow drain or scupper should also be provided for each drainage section because blockage of the primary drain will cause ponding problems. The cost of additional slope can be reduced by limiting the amount of affected membrane to the critical use areas of the building. These areas contain sensitive or expensive equipment, such as computers, or may involve activities that have a major impact on a military mission that would be severely impeded by roof leak interruptions. Figure 2-3 illustrates the use of additional slope over two critical use areas of a building. Neither of these areas requires added roof drains or scuppers, but additional curbing must be installed to accommodate the slope increase.

CONVERSION FROM WATERPROOF TO METAL OR WATERSHED SYSTEM

When the evaluation of the existing roof suggests an increase in roof slope, it is appropriate to consider the possibility of conversion to a metal or watershed system. The cost of conversion can be significantly less than the cost of providing additional slope with tapered insulation and a new BUR or single-ply roof. However, many factors influence the cost effectiveness of conversion, including the building

- dimensions—widths under 40 to 50 ft are usually practical,[3]
- shape—simple rectangles are most easily converted,
- architecture—a metal or shingle roof does not look appropriate on all buildings,

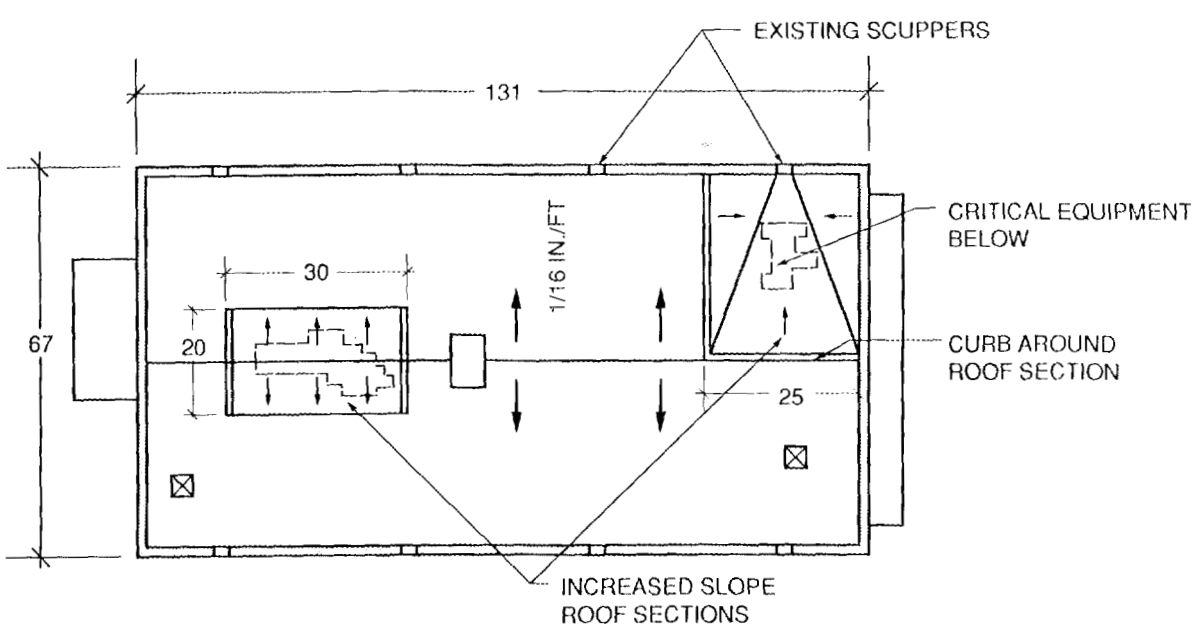

ALL DIMENSIONS ARE IN FEET UNLESS MARKED OTHERWISE.

Fig. 2-3. An illustration of the use of additional slope over two critical use areas.

- function—the use of the building may dictate fire code constraints that preclude conversion,
- structure—structural limitations on some buildings could prohibit addition of a watershed roof,
- equipment—significant amounts of roof-mounted equipment (e.g., HVAC) could make conversion impractical, and
- design details—specific details of an individual existing building can make conversion more difficult and therefore costly.

Because these factors change with each individual building, it is impossible to generalize about when conversion to a watershed system will prove to be a cost-effective option. However, to assist the reader in evaluating this option, an example is offered below in "Roof Conversion Evaluation."

EXAMPLE: Roof Conversion Evaluation—Airmen's Dormitory

The existing Airmen's Dormitory at Anywhere Air Force Base (AFB) was built with a dead flat roof that ponds water over a substantial portion of its area because of deck deflection. The performance of the existing roof (failure at 10 years) and the numerous complaints of leaks have led the base roofing engineer to evaluate, in addition to replacement in kind, increasing the roof slope to 1/4 in./ft and converting to a watershed roof. Roof cuts taken of the existing roof indicate that despite the frequent leaks the existing insulation is not wet except in very small areas near leaks. The existing roof plan and conversion options are shown in Fig. 2-4.

Conversion from dead flat to a slope of 1/4 in./ft and tapered insulation offer no major problems. Insulation thickness can be maintained within the 6-in. maximum. However, the roof-mounted HVAC units will have to be raised to accommodate the new roof.

Conversion to a watershed roof requires evaluation of a number of factors, including the following.

Dimensions	The building is 47 ft wide by 210 ft long. A simple hip roof could be installed with a ridge at 8 ft above the eaves. Reference 2 indicates that this dimension is potentially cost effective for conversion with a 50-lb/sq. ft live load requirement in Anywhere AFB's snowy climate.
Shape	The building shape is a simple rectangle with one small appendage on each end. The basic building could be easily covered with a hip roof, with the appendages having separate small hip roofs covering each.
Architecture	The building is located near the residential portion of the site with a large number of individual dwellings with shingle roofs. The potential hip roofs do not conflict with the building architecture and could help to visually integrate it into the surroundings.
Function	The use of the building as a dormitory does not preclude conversion to a watershed shingle roof with wood deck and framing.
Structure	The concrete block walls are capped with a precast concrete (Flexicore) deck, with no parapets. The structure is adequate to support the wood framing deck and shingles required for conversion.
Equipment	Eight roof-mounted HVAC units will have to be relocated to atop the new roof during conversion.

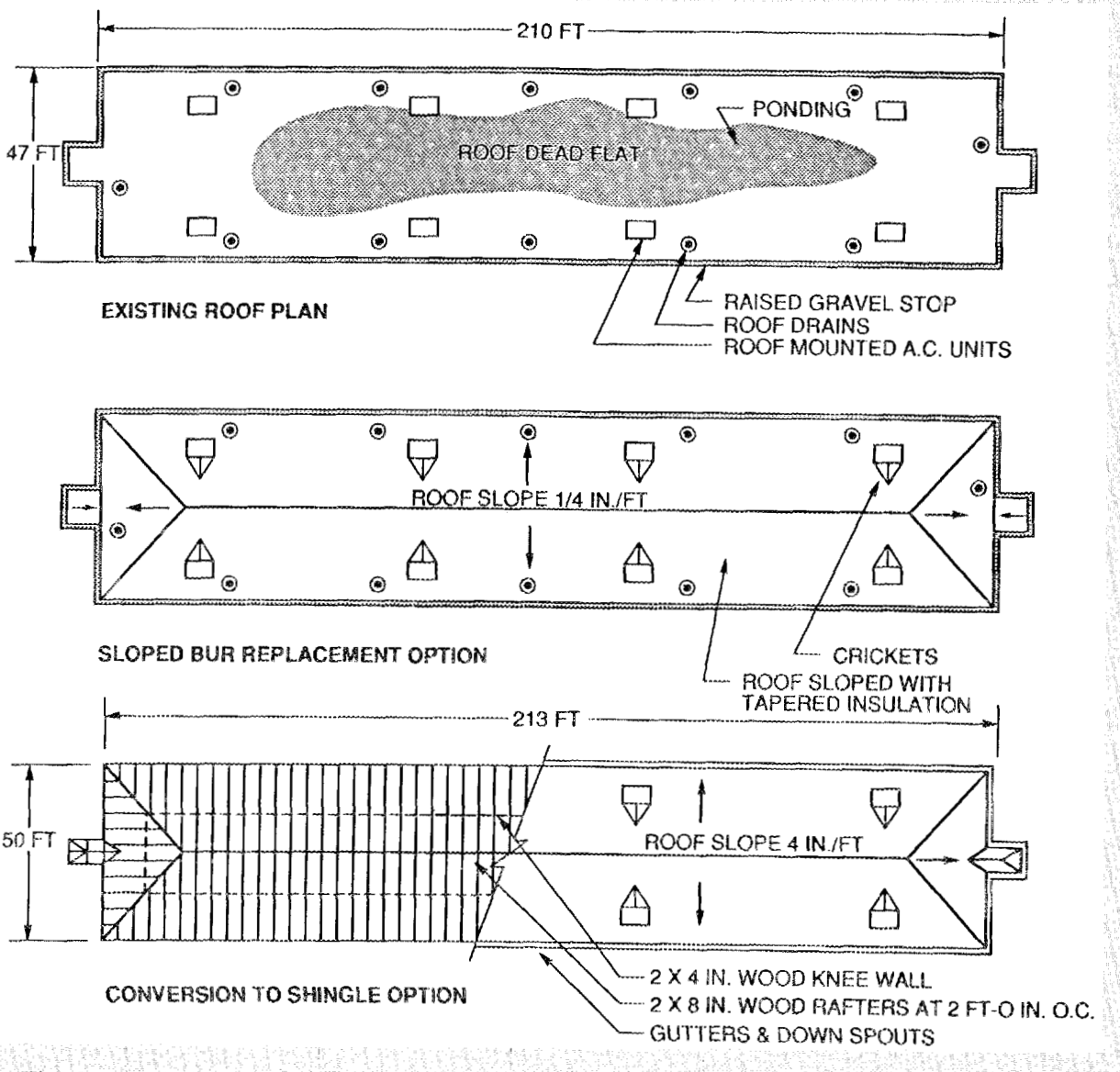

Fig. 2-4. Existing roof plan and conversion options for the Airmen's Dormitory, Anywhere Air Force Base.

Design Details No unusual details exist. Several vent stacks and exhaust ducts will have to be extended through the conversion roof.

Conversion to a watershed shingle roof would be accomplished by the following method. Wood rafters (2 × 8 in.) would be framed on 24-in. centers to create a hip roof with a slope of 4 in./ft. The decking would be 1/2-in. plywood covered with 15-lb felt under 235-lb asphalt shingles. Knee walls constructed of two-by-fours would be used for support at the midspan of the rafters. Soffit vents would be used at the base of the roof and a ridge vent along the ridge. Six inches of blown-in fiberglass insulation would be installed on top of the existing roof. Seamless 4-in. gutters would be added around the perimeter of the roof. Mechanical equipment would be mounted on new platforms. The existing roof does not require removal because it is not wet except at leak sources.

(continued)

The initial costs of the three options being considered follows.

Replacement-in-kind (no-slope) BUR option

Remove existing BUR, insulation, and gravel	$13,900
Install R-13 rigid-fiberglass insulation	19,300
Install 4-ply asphalt BUR with gravel	12,500
Replace gravel stop (4 in. high)	6,420
Total	$52,120

Increase slope to 1/4-in./ft BUR option

Remove existing BUR, insulation, and gravel	$13,900
Install tapered fiberglass insulation (R-13 average)	26,000
Install 4-ply asphalt BUR with gravel	12,500
Install gravel stop (8 in. high)	6,825
Raise roof-mounted HVAC units and install crickets	1,000
Total	$60,225

Convert to 4-in./ft asphalt strip shingles option

Install wood frame and plywood deck over existing roof	$21,170
Install asphalt strip shingles	10,500
Install 6-in blown-in fiberglass insulation (R-13)	6,430
Install soffit	1,050
Install ridge and soffit vents	1,270
Install gutters and downspouts	2,120
Raise roof-mounted HVAC units to atop new roof and install crickets	2,800
Total	$45,340

Note that the single largest cost variable among the three options is the type of insulation used. The use of insulation shown in the BUR options (rigid fiberglass) is common in the Air Force. The tapered insulation costs more than four times the cost of comparable R-value blown-in insulation. This difference makes conversion extremely attractive in this example. The use of lower cost, approved foam insulation should also be evaluated when considering the conversion of a BUR to a watershed system. In some cases, the use of lower cost insulation will reverse the LCC analysis outcome.

In cold climates and in buildings with high interior humidity (>45%),[4] care must be exercised in the selection of the proper roofing option because of the potential condensation problems associated with below-deck insulation. Excess condensation can rot a wood deck or corrode a metal roof and lead to premature replacement of the entire roof. Simple adherence to the lower LCC in these areas is not prudent.

The LCC analysis of the three options is presented in Sect. 4.

EXAMPLE: Choosing the Best Roof Replacement Option—Communications Building

A thorough analysis of all problems encountered with an existing roof must be done before selecting the best roof replacement design strategy. Items to be considered are given in the checklist at the end of this section. An example using the checklist in the analysis of existing conditions and the selection of the best reroof options follows.

The Communications Building at Anywhere Air Force Base has been scheduled for roof replacement next year. The building contains three separate roof sections (see Fig. 2-5), each with distinctly different characteristics.

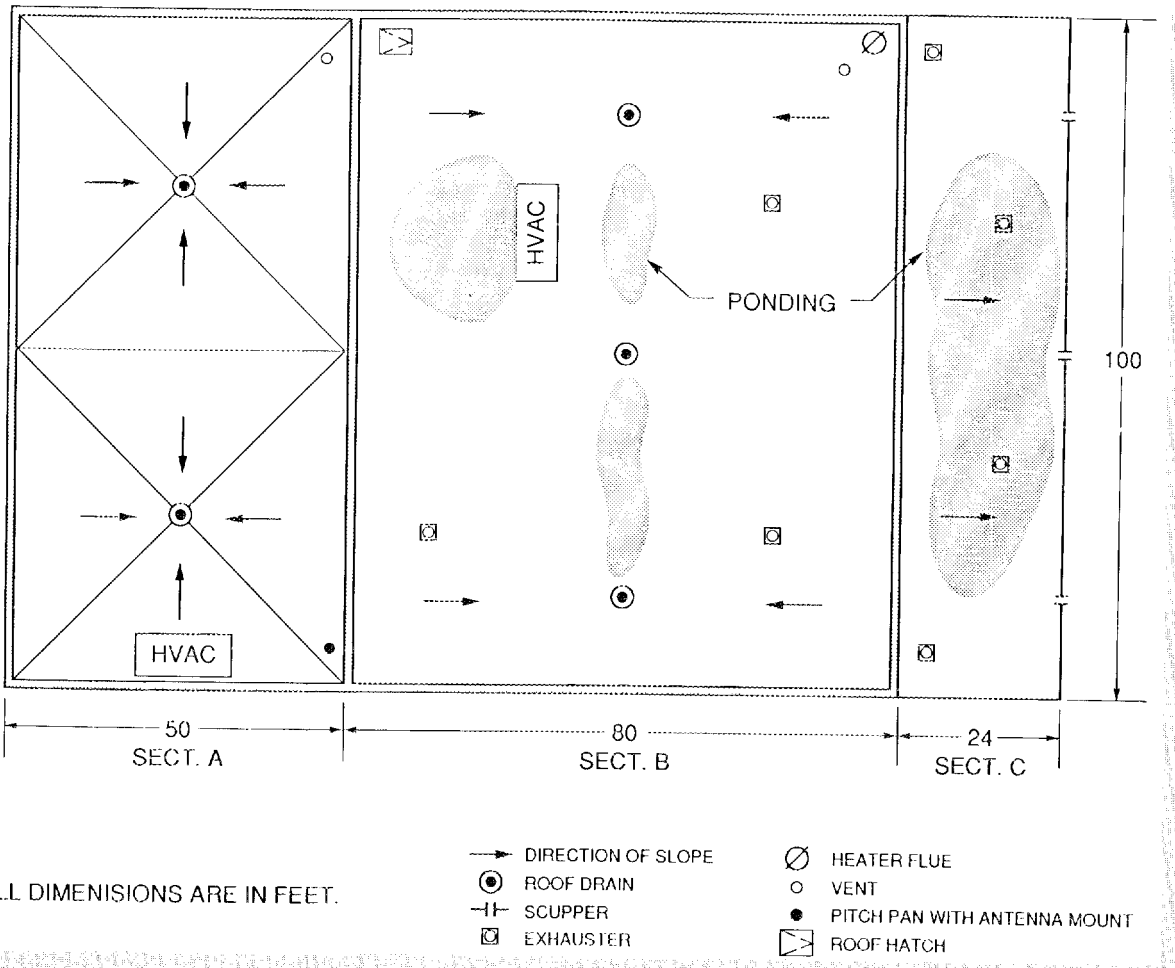

Fig. 2-5. The three roof sections of the Communications Building, Anywhere Air Force Base.

Description of Existing Roof Sections (from Historical Records)

- Roof Sections A, B, and C have steel decking on bar joists to provide design slopes of 1/16 in./ft.

- Existing roofs have 2-1/2-in. (R-10) fiberglass insulation applied in two layers and attached with hot asphalt (no mechanical fasteners); and a 4-ply, gravel, organic-felt BUR membrane.
- Roofs on Sections A and B have not "failed" but are 20 and 22 years old and deficient and have been judged by Air Force inspection to be ready for replacement. The roof on Section C is 15 years old and has had frequent leak problems for the past 5 years.

Roof Problem Information and Analysis

Roof Section A

- Leak history and visual inspection shows (1) open flashing on the high side of HVAC equipment (without cricket), (2) antenna pitch pan leak from shrunk asphalt fill and inadequate maintenance, (3) two recent wall leaks traced to breaks in joint sealant of metal coping on parapet wall.
- Analysis and option chosen: no change in overall slope—leaks are not related to slope of membrane; increase slope on high side of HVAC equipment with cricket to reduce the possibility of future flashing leaks.
- Roof replacement design recommendation: (1) add a cricket on the high side of HVAC equipment, (2) eliminate antenna pitch pan (pitch pans are major roof problem sources requiring frequent maintenance) and surface mount antenna on vertical face of the high-bay Section B with weather-protected wire lead-in through wall, (3) increase interior slope of metal coping to minimize snowmelt entry through coping joints.

Roof Section B

- Leak history and visual inspection shows (1) repeated leaks in horizontal drain valley (without a saddle), (2) leaks in ponded area near HVAC equipment due to traffic punctures by equipment maintenance personnel.
- Analysis and options chosen: (1) provide saddle between drain valleys and between end drains and each wall, (2) evaluate options of adding either a large cricket or a new roof drain on high side of HVAC unit to eliminate localized ponding.
- Roof replacement design recommendation: (1) install saddle in horizontal drain valley, (2) add drain on high side of HVAC equipment (the large cricket required would cost more than the additional drain), (3) add walkway for protection of roof between roof hatch and HVAC equipment.

Roof Section C

- Leak history and visual inspection shows serious ponding due to roof deck deflection that has resulted in premature degradation of the BUR membrane (blisters, splits, and resulting leaks). Roof problems have caused interruptions in the operation of sensitive equipment housed below Section C.
- Analysis and option chosen: increase slope of entire roof in this critical-use area.
- Roof replacement design recommendation: compare several different approaches, including (1) 1/4-in./ft slope with tapered, rigid-fiberglass insulation (average 3 in. thick, maximum 6 in. thick at high end); (2) 1/4-in./ft slope with standing seam metal roofing (including metal slope-support structure and fiberglass-batt insulation); (3) 2-in./ft slope asphalt shingles with

required low-slope, watertight underlayment protection, wood supporting structure, and fiberglass-batt insulation. Note that all these changes require extension of the end walls to enclose the new sloped roofing because only a perimeter gravel stop is currently provided. This added enclosure will be most costly for the shingle option because of the larger area and more costly materials. The wall extension for the 1/4-in./ft slope with either tapered insulation or metal roofing can be enclosed with a wide sheet metal facia with wood or light metal back support. The existing roof and insulation must be removed in all three options because it is heavily water-logged and would cause corrosion or rotting problems with the roof conversion options and is an unacceptable base for the BUR option.

For roof Section C, the initial costs of the three options considered are as follows.

Convert to 1/4-in./ft slope BUR option

Remove existing gravel, BUR, and insulation	$3,340
Install tapered fiberglass insulation (R-11 average)	6,240
Install 4-ply asphalt BUR	3,000
Install 12-in. face-height gravel stop	2,640
Raise exhausters approximately 6 in.	100
Total	$15,320

Convert to 1/4-in./ft. slope standing seam metal option

Remove existing gravel, BUR, and insulation	$3,340
Install painted steel standing seam roof and metal support structure	7,560
Install fiberglass-batt insulation with vapor barrier (R-11)	940
Install roof ventilation (mushroom vents)	600
Install gutter and downspouts	500
Install painted sheet metal closure at end of roof	720
Raise exhausters approximately 6 in.	100
Total	$13,760

Convert to 2-in./ft slope asphalt strip shingle option

Remove existing gravel, BUR, and insulation	$3,340
Install wood support structure atop existing roof	3,285
Install 2-ply BUR subroof	1,315
Install asphalt strip shingles	2,120
Install blown fiberglass insulation (R-13)	1,540
Install roof ventilation	100
Install gutter and downspouts	500
Install wood siding on wood frame building closure	380
Raise exhausters approximately 2 ft	300
Total	$12,880

Miscellaneous flashing and other details common to all options are not included because their impact is equal in an LCC analysis.

The LCC analysis of the three options for modifying the slope of Roof C is presented in Sect. 4. From this analysis, the best (i.e., most cost-effective) option can be chosen.

CHECKLIST OF ITEMS TO BE CONSIDERED

The follow items should be considered in the analysis of existing waterproof roofs for possible slope modification.

1. Collect available information from the following sources.
   - Historical records
     - — construction drawings and specifications ("as-built" and all modifications to roof or roof-top penetrations and equipment);
     - — Air Force Roof Inventory and Periodic Inspection Records (Forms 1059 and 1060 and file notes);
     - — locations and dates of all reported leaks (with identification of water entry source into the membrane and water entry point into building area, if known);
     - — detailed repair records (both in-house repairs and contract maintenance repairs); and
     - — photographic records of roof modifications, and repairs.
   - Autopsy inspection
     - — visual (viewed from ground outside, from rooftop, and from underside of roof). Check for
       1. ponding from improper drain or scupper elevation and from deck deflection or settlement (including pond size and depth);
       2. detailed condition of roof membrane, flashings, and rooftop equipment; and
       3. flashing distortion due to wall movement.
     - — nondestructive moisture analysis to determine areas with wet insulation; and
     - — roof cuts (if appropriate).
2. Compile all pertinent information on a single roof drawing.
3. Perform cause-and-effect analysis of existing roof conditions.
   - Determine cause of roof failure
     - — inappropriate design (slope modification could have an important impact);
     - — inadequate maintenance (slope modification might offset some maintenance deficiencies if new roof is also inadequately maintained);
     - — inadequate quality of installation (slope modification might offset some quality deficiencies if new roof also has quality problems);
     - — inappropriate material for the job (slope modification would provide no improvement);
     - — advanced age (outlived its design life), slope modification would provide no improvement; or
     - — a combination of factors.

- Classify leak sources as follows
  - — in open areas of roof membrane (due to, e.g., punctures, splits, broken blisters);
  - — in flashings and roof details (drains, gravel stops, expansion joints, pitch pockets, vent pipes, curb flashing, roof-mounted equipment flashing, wall flashing);
  - — in non-roof sources (e.g., integral leaks through HVAC unit, ducts, other roof-mounted units; condensation problems; copings or parapet wall problems above roof flashings); or
  - — a combination of factors.
- Determine whether ponding or poor drainage has occurred at source of roof leak. If either has occurred
  - — in open areas of the roof, slope modification (either complete or partial) or drainage changes warrant further investigation;
  - — in flashings and roof details, slope modification (especially crickets and saddles) or drainage changes warrant further investigation; or
  - — in non-roof sources, no change is dictated, because leaks are not related to roof.
- Note those areas of the roof where slope modification or drainage changes could impact leak performance
  - — if limited in scope, strategies such as crickets and saddles or additional drains should be considered;
  - — if applicable over the entire roof, slope modification or a new drainage system should be considered.

REFERENCES

1. L. Morris, *Real Property Operation and Maintenance: Built-Up Roof Management Program,* AFM 91-36, Department of the Air Force, September 1980.
2. *Built-Up Roofing Repair/Replacement Guide Specification,* Headquarters Air Force Engineering and Service Center, Department of the Air Force, Tyndall AFB, Fla., July 1987.
3. M. J. Rosenfield and C. Doyle, *Sloped Roof Conversions for Small, Flat-Roof Buildings,* CERL Tech. Report M-85/05, Construction Engineering Research Laboratory, U.S. Army Corps of Engineers, Champaign, Ill., December 1984.
4. W. Tobiasson and M. Harrington, "Vapor Drive Maps of the USA," in proceedings of the American Society of Heating, Refrigerating and Air Conditioning Engineers/U.S. Department of Energy/Building Thermal Envelope Coordination Council Conference on *Thermal Performance of the Exterior Envelopes of Buildings III,* ASHRAE, Atlanta, 1985.

Section 3
LIFE-CYCLE COSTING AND FACTORS INFLUENCING ROOF COSTS

One important approach to comparing the costs of roofing options is life-cycle costing (LCC). The LCC technique considers all related roofing costs that occur over the life of the roof system in evaluating its cost effectiveness. This approach is used when comparing roofing options because it permits one-time costs such as initial cost to be evaluated along with periodic costs such as maintenance and energy consumption in such a manner that valid economic decisions between the alternatives can be made.

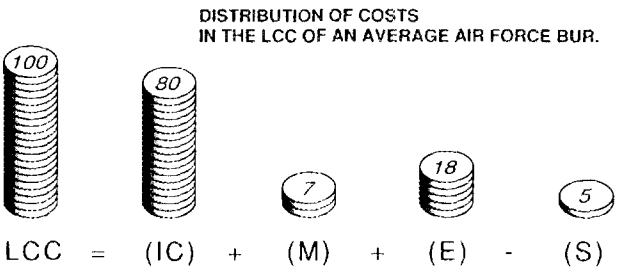

Fig. 3-1. The distribution and relative impact of each of the cost factors on the life-cycle cost of a typical Air Force built-up roof.

LCC ANALYSIS METHODOLOGY

The LCC analysis of a roof is impacted by all expenditures associated with the construction and maintenance of the roof and the energy consumption attributable to thermal losses through the roof system. The dominant LCC factors of a roof include

- initial cost (IC),
- maintenance costs (M),
- energy costs (E),
- salvage value (S),
- life, and
- discount rate used.

Each of these factors has varying degrees of impact on LCC. Figure 3-1 illustrates the relative impact of each of the cost factors on the LCC of a typical Air Force roof. In a simplified form, the LCC equation of a roof can be expressed as:

LCC = initial cost + maintenance cost + energy cost − salvage value

Because initial cost and salvage value occur only once, and maintenance and energy are ongoing costs, this simplified equation cannot be used directly to calculate LCC. The roof life and the discount rate (the value of money over time) must be factored in to convert the one-time and annual costs to a common base such that the additions and subtraction can be performed (i.e., all in an annual cost form). Section 4 shows how to accomplish this task.

Initial Cost

The initial cost of a new roof or roof replacement/conversion will include several of the following costs

1. design and installation of the roof structural system (framing and deck);
2. design and installation of the roof, including membrane, insulation, flashing, drainage system, and other features;
3. tear-off of an existing roof (if required during re-roofing);
4. impact to the roof of roof-mounted building support equipment (e.g., HVAC and exhaust) and structures; and
5. building closure (gable or parapet walls) required by the roof design.

The wide range of initial costs for different roofing types is outlined later in this section. These costs are usually the most substantial element of the LCC of a roof.

Maintenance Costs

Costs associated with the inspection, routine maintenance, and repair of a roof are generally not well documented and therefore difficult to estimate. They can vary dramatically between waterproof and watershed roofs. Even among BURs, repair costs can vary significantly depending on the quality of both the installation and the roof inspection and maintenance program. Typical roof maintenance costs in the Air Force include

- general, moisture, and roof-condition rating inspections;
- routine roof maintenance (e.g., cleanout of drains, removal of debris); and
- in-house and contracted repairs (not replacement).

Maintenance costs occur periodically throughout the life of a roof. They vary from one year to the next and thus were estimated on an average annual basis. This section provides BUR maintenance costs based on data collected from Air Force installations. These costs can be used in costing the different roof types discussed in this guide. Costs for other low-sloped waterproof roofs, metal roofs, and various watershed roofs were not solicited from the Air Force. However, estimates have been made also for these roofing types.

Energy Cost

Energy cost represents the cost of energy used to offset the heat gained or lost through the roof. Roof-related energy use is largely controlled by the insulating value (R-value) of the roof. When a BUR with rigid insulation is changed to a watershed roof with an attic space and insulation, additional factors such as attic ventilation will also impact energy consumption. Quantifying this impact is difficult, and the change in energy cost is likely to be small. Therefore, the LCC in this guide is set up to compare roofing options on the basis of insulation R-value. Optimum BUR insulation levels for select insulation types can be determined from *Decision Guide for Roof Insulation R-value.*[1]

LCC comparisons using insulation R-value will allow costing of options to be done without predicting the energy use attributable to the roof. This approach is desirable because potential errors are likely to occur in estimating the energy use of a building. In addition, estimating only the roof-related portion of that energy use further increases the potential for major estimation errors.

Salvage Value

Roof salvage value is easiest to understand when thought of as the remaining value (if any) of an existing roof that will reduce the cost of the next roof. Salvage value would include, for example, cost savings due to the reuse of existing materials such as insulation and cost savings due to avoided or reduced labor costs such as those that could be saved if the existing membrane does not have to be torn off. In evaluating new construction and conversion options, the cost of the roof structural system (framing and deck) would be included as salvage value because it will be reused by the next roof on the building.

Salvage value is a benefit and not a cost; therefore, it is subtracted in the LCC equation. Because it occurs at the end of the roof's life (replacement), the shorter the roof life, the greater the benefit from salvage value.

Current Air Force policy on BUR replacement does not permit retention of existing materials above the roof deck. In the future, salvaging roof insulation might become a permitted option because construction practice is moving toward increased and more costly insulation, and the Air Force BUR Management Program is

providing better protection of the insulation from water damage. This more expensive insulation may eventually become too valuable to discard when the membrane is replaced.

Discount Rate

Discount rate reflects the value of money over time. Having $1000 today to spend or invest is more valuable than having $1000 a year from now. Expenditures or benefits are discounted using this rate and the life of the roof such that the LCC elements can be annualized on a common basis. Depending on the magnitude of future expenditures and benefits, the discount rate can have major impacts on an LCC analysis. The discount rate used in this guide is 10% and corresponds to that currently used by the Air Force in LCC of buildings.

Life

All costs and benefits of a roof are discounted accordingly over the life of the roof. If two roof options have identical costs, a difference in lives will make one option more economical than the other, as illustrated in the following simplified example:

> Two roof options have insignificant costs for maintenance, roof-associated energy use, and salvage value. Initial costs and lives are as follows:
>
> Roof 1 costs $80K and lasts 15 years.
> Roof 2 costs $100K and lasts 20 years.
>
> From an initial cost standpoint, Roof 1 is the more economic option.
>
> However, on an annual cost basis:
>
> Roof 1 costs $80K/15 = $5.33K/year.
> Roof 2 costs $100K/20 = $5K/year.

Roof 2, with the higher initial cost but lower annualized cost is the more economic option. This difference is due to the difference in lives. (Note: the discount rate was ignored in annualizing initial costs for this example).

Present-Worth Cost Versus Annualized Cost

Both the present-worth and annualized approaches for LCC can be used in costing roofs. Annualized costing is used in this guide because of its simplicity as compared to present-worth costing when differing lives are involved.

INDIRECT COSTS OF ROOF SYSTEM FAILURE

The indirect costs of roof system failure are very difficult to quantify and have not been included in LCC analysis in this guide. They are, however, very real and on occasion can overwhelm a traditional cost analysis. As such, they should not be ignored in the determination of the most cost-effective option. When the LCC analysis places two options close together, the one that is least likely to fail and cause indirect costs should be chosen. This decision is best based on the experience of a roof professional. Indirect costs include

- disrupted functions,
- damaged building contents,
- energy lost through wet insulation, and
- premature roof replacements.

Disrupted functions include the slowdown or shutdown of building activities resulting from roof leaks. Costs due to damaged building contents may include costs to repair or replace equipment, furnishings, and interior finishes. These costs are seldom accounted as attributed to a particular roof. Although these costs may be "invisible," they are real and can in some scenarios have a major impact on the costs associated with a roof.

Accelerated energy loss due to wet insulation is common in failed waterproof roof systems. Wet insulation has a reduced insulating value, which results in an increased energy use to accomplish the same space conditioning within a building. When roof failure resulting in wet insulation occurs after the first 10 years of roof life, the impact on the LCC is minimal because of

the effect of discounting. If the energy consumed in a building is metered, the cost of the energy loss due to wet insulation can be approximated. If it is not metered, this cost usually becomes "lost" in a slight increase in the installation's overall utility costs.

Premature roof replacement can dramatically increase the cost associated with an existing roof. A leaking roof could lead to a decision to replace the roof as a means of correcting the problem, even though the roof may still have useful life and be maintainable. This decision, driven by disrupted functions and damaged contents, shortens the life of the roof and can have a profound impact on annualized roof costs. A 20-year roof prematurely replaced at 10 years will cost over 40% more per year. Preventing premature roof replacement to avoid this type of surge in roofing costs is a primary function of a roof maintenance program.

Experience suggests that avoiding roof leaks is cost effective.[2,3] Leak avoidance involves appropriate design, proven materials, quality installation, periodic inspection, on-going maintenance, and timely replacement of roofs.

INITIAL COST

The initial costs (design and construction) of a roof system have the largest single impact on LCC (see Fig. 3-1). This impact is due to

1. the magnitude of initial costs relative to other costs, and
2. the fact that these costs occur "up front" and are not subject to discounting as are annual or periodic costs and salvage value.

With this in mind, it is clear that, on an LCC basis, initial cost will make or break most roofing options. Options that cost more initially will have to show significant cost savings among other factors to be considered cost effective.

Because initial costs are very building specific and they dominate LCC, it is not possible to draw general conclusions. Increasing roof slope may be a cost-effective option for one building, cost neutral for another building, and more costly for a third. However, by following the methods in this decision guide, the reader will be able to determine what is cost effective for a particular structure.

Sources of Initial Cost Data

Numerous sources of initial cost data for roof construction are available, including

1. nationally recognized estimating guides,
2. U.S. Department of Defense cost estimating data bases,
3. roofing trade association publications,
4. contractor quotes,
5. project bids, and
6. professional roofing engineers' experience.

When initial cost is being considered in an LCC analysis, it is most useful to have a large body of information that will accurately define the cost differences among the various options being studied. Costs are relative in the LCC equation and not absolute. Because the LCC analysis should be made during the conceptual design stage to have maximum impact with minimum effort, major effort to develop detailed bill-of-material costs is not warranted. For this reason, it is recommended that a nationally recognized estimating guide or other source with a wide range of cost data in a useful format be used as input data. When the costs contained in these guides are significantly different from actual Air Force experience, Air Force costs should be substituted. This decision guide uses the following R. S. Means[4–6] estimating guides as the basis of initial costs:

Building Construction Cost Data 1986, 44th ed.[4]
Means Assemblies Cost Data 1987, 12th ed.[5]
Repair & Remodeling Cost Data, Commercial/Residential 1987, 8th ed.[6]

The Air Force will distribute a detailed cost-estimating system called Construction

Cost Management Analysis System (CCMAS) to the field in 1989. This system has built-in cost data at several levels of detail, down to individual line items. The annually updated CCMAS cost data can be used for the development of initial roofing costs in lieu of Means[4–6] cost data provided in this guide.

Area Cost Factors

Although area cost factors permit a more accurate estimate of actual construction costs at a particular location, they provide no benefit in the LCC analyses of various potential options at the same installation. In addition, unless the installation has acquired accurate maintenance costs and roof-life data for its buildings (not the generic Air Force-wide data contained in this document), the use of area cost factors could in fact distort the outcome of the LCC analysis for installations with unusually high or low area construction costs. This decision guide does not address area cost factors in its LCC examples.

Updating Cost Data

If the Means[4–6] or other estimating guides are used, initial construction costs can be easily updated as a more recent versions of the guides become available. Most costs increase or decrease according to the overall construction economy. Occasionally, the relative cost difference between construction options will change. Unless there are significant relative changes in the costs between options, frequent updating of initial costs for the LCC analysis is unnecessary. Whenever initial cost updating occurs, maintenance and operating costs and salvage value must also be updated. Unless this is done, erroneous shifts in the outcome of the LCC analysis may occur.

Building Elements That Impact Initial Costs

A number of building elements that directly affect the initial cost of a roof are impacted by changing the roof slope. These elements are illustrated in Figs. 3-2 and 3-3.

In general, adding slope to a roof increases initial cost. The amount of increase can range from very small to dramatic depending on the approach to changing the roof slope and how the building is enclosed. Two immediate changes to the initial cost that result from a change in roof slope are that

1. the surface area of the roof increases, thus requiring more roofing materials; and
2. the required wall area (e.g., parapet and gables) for building closure may be increased or the roof drainage system (for waterproof roofs) changed to a more extensive system to reduce the impact of increased slope on building closure (Fig. 3-4).

The surface area of a roof always increases with added slope. The need for increased wall area or drainage system changes will depend on how much slope is increased, on how it is increased, and on the building design.

As the slope of waterproof membrane roofs increases towards that of watershed roofs (2 to 4 in./ft), a fundamentally different approach to roofing will likely occur. This may include converting to a peripheral drainage system (possibly gutters) and to a hip-roof configuration. As a result, the costs of the drainage system and building closure may be markedly reduced. However, in the process, the architectural character of the building is also changed. Whether or not this change is acceptable is an individual design decision.

Initial Costs of Typical Air Force Roofing and Structural Systems

The initial costs of typical Air Force roofing and structural systems have been developed in Table 3-1. These data are useful in that they illustrate the relative impact of each of the roof system elements (membrane, insulation, deck, and structure) on the total system cost. In addition, they illustrate the relative costs among various systems (wood through structural steel), which are listed

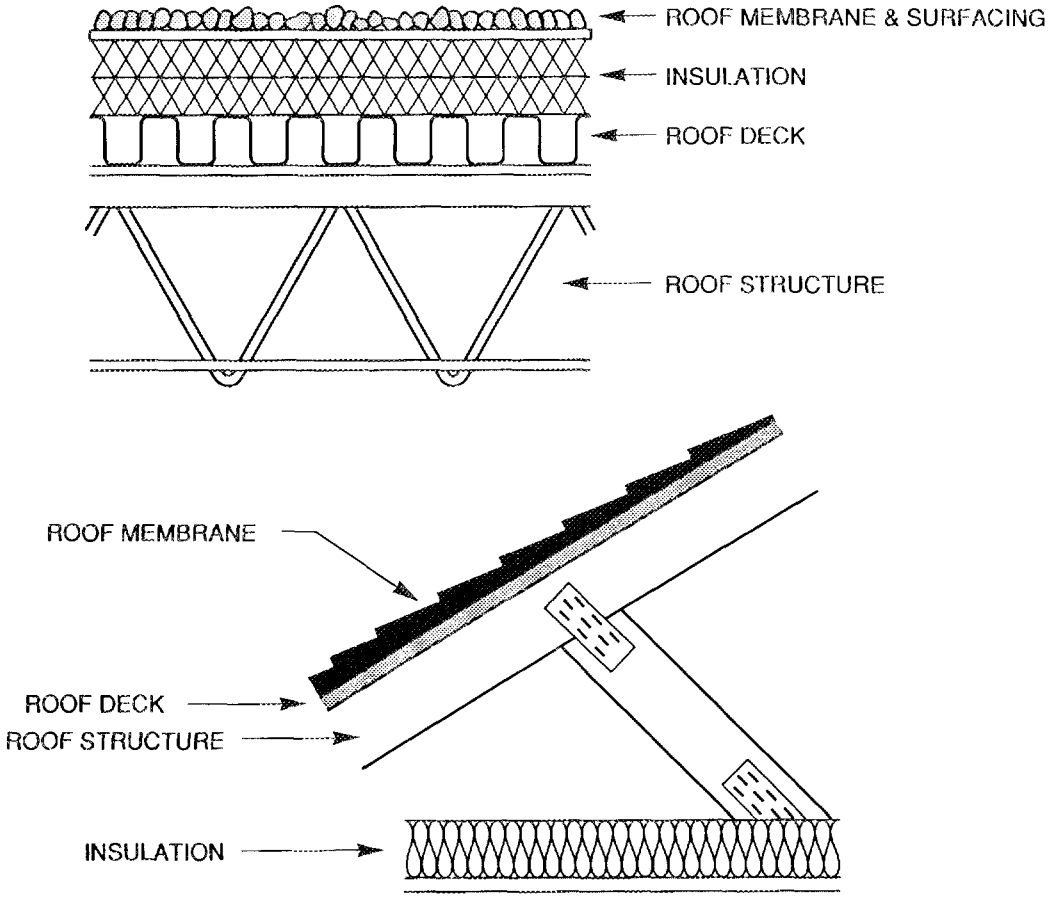

Fig. 3-2. Each of the building elements illustrated make up the initial cost of a roof and can be impacted by changing the roof slope.

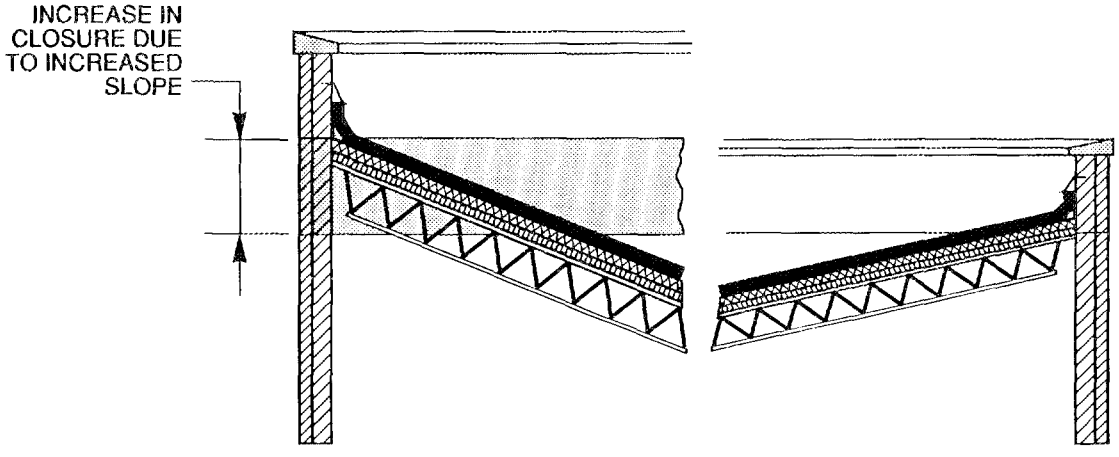

Fig. 3-3. The amount of building closure (walls, parapets, and gables) can be significantly impacted by changing the roof slope. The cost of this closure can be large and must be taken into account when evaluating roof options.

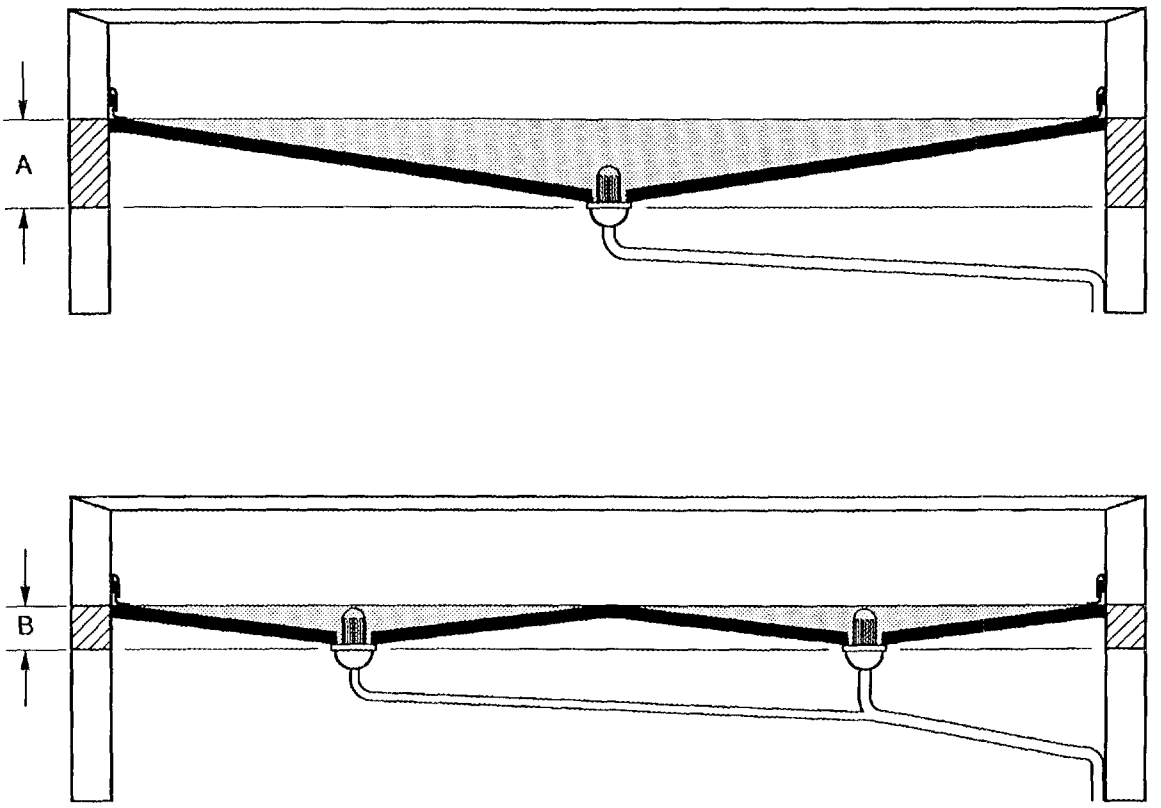

Fig. 3-4. The relationship between a waterproof roof drainage system and the amount of building closure is illustrated above. Both roofs have the same slope. The top roof has a single drainage area, while the lower roof has two. As a result, the amount of added building closure in drawing A (top) is twice that of drawing B (bottom).

from least to most costly. The costs shown are based on a specific set of building design assumptions, which may not correspond to the design of a building that the reader wants to analyze. Therefore, readers are urged to calculate initial costs directly from cost-estimating guides or other sources of their choosing.

Metal roofs in particular are difficult to generalize. Most metal roofs are an integral part of a pre-engineered metal building and their costs are therefore more difficult to isolate. Direct communication with building manufacturers may be the best source of cost data for this type of roof. The remaining metal roofs fall into two categories: preformed and field-formed. Preformed metal roof systems (both lap and standing seams) include a wide variety of material and finishes and can be cost competitive. In general, field-formed metal roofs cost much more and, depending on material, can also last much longer than other roofs. The choice of these roofs is frequently governed by factors other than initial cost or LCC.

Watershed roofs (shingles, shakes, and tile) are most commonly used in residential applications. As such, only wood structural systems have been reflected in the table. Watershed systems, other than asphalt shingles, are chosen for reasons other than cost. In the case of tiles, the cost varies widely depending on material and color. The minimum and maximum cost for each material is indicated. Varying the slope of shakes or tiles below or above the norm of 4 in./ft will markedly increase the indicated costs because enhanced waterproofing or increased structural support is required.

Table 3-1. Initial cost per square foot of typical Air Force roofing systems[a]

Roof membrane	Insulation	Roof deck	Structure	Total cost ($/sq. ft)
		Waterproof systems		
Asphalt w/gravel, 4-ply fiberglass on nailable deck (1.41)	Fiberglass batt, under the deck, 3½ in. thick, R-11 (0.39)	Plywood, ½ in. grade CDX	Wood 2 × 8 in. joists, 24 in. O.C. (1.58)	3.38
	Rigid fiberglass, above the deck, 2 at 1-5/16 in., R-10.6 (1.68)	1½-in. thick, 22-ga. galvanized steel	Steel joist, joist girders on columns and walls, 30 × 30 ft bay, 40 PSF (live load) (2.21)	5.30
	(1.68)	C.I.P. concrete multispan joist slab, 30 × 30 ft bay, 40 PSF (live load) (7.88)		10.91
Same as above except mopped in place (1.35)	(1.68)	Precast concrete beam and plank 30 × 30 ft bay, 40 PSF (live load) (8.45)		11.48
	(1.68)	Structural steel, composite deck and slab, 30 × 30 ft bay, 40 PSF (live load) (9.35)		12.38
Asphalt, smooth surface, 4-ply fiberglass on nailable deck (1.25)	Fiberglass batts, as before (0.39)	Wood, as above (1.58)		3.22
	Rigid fiberglass, as before (1.68)	Steel joists and deck, as before (2.21)		5.04
	(1.68)	C.I.P. concrete, as before (7.88)		10.82
As before except mopped in place (1.26)	(1.68)	Precast concrete, as before (8.45)		11.39
	(1.68)	Structural steel, as before (9.35)		12.29

Table 3-1 (continued)

Roof membrane	Insulation	Roof deck	Structure	Total cost ($/sq. ft)
Coal tar pitch w/gravel, 4-ply tarred felt, on nailable deck (1.60)	Fiberglass batts, as before (0.39)	Wood, as before (1.58)		3.57
	Rigid fiber-glass, as before (1.68)	Steel joist and deck, as before (2.21)		5.39
As above except mopped in place (1.55)	(1.68)	C.I.P. concrete, as before (7.88)		11.11
	(1.68)	Precast concrete, as before (8.45)		11.68
	(1.68)	Structural steel, as before (9.35)		12.58
Modified bitumen, 150 mils, fully adhered (1.39)	Fiberglass batts, as before (0.39)	Wood, as before (1.58)		3.36 3.46
As above except granular surface (1.49)	Urethane, felts both sides, 1½ in., R-11.11 (0.85)	Steel joist, as before (2.11)		4.35 4.45
	(0.85)	C.I.P. concrete, as before (7.88)		10.12 10.22
	(0.85)	Precast concrete, as before (8.45)		10.69 10.79
	(0.85)	Structural steel, as before (9.35)		11.59 11.69

Table 3-1 (continued)

Roof membrane	Insulation	Roof deck	Structure	Total cost ($/sq. ft)
EPDM, 60 mils, fully adhered	Fiberglass batts, as before	Wood, as before		3.34
(1.37)	(0.39)	(1.58)		2.93
As above except w/stone ballast	Urethane, felt both sides, as before	Steel joist, as before		4.33
(0.96)	(0.85)	(2.11)		3.92
		C.I.P. concrete, as before		10.10
	(0.85)	(7.88)		9.69
		Precast concrete, as before		10.67
	(0.85)	(8.45)		10.26
		Structural steel, as before		11.57
	(0.85)	(9.35)		11.16
CSPE, 35 mils, fully adhered	Fiberglass batts, as before	Wood, as before		3.84
(1.87)	(0.39)	(1.58)		3.44
As above except w/stone ballast	Urethane, felt both sides, as before	Steel joist, as before		4.83
(1.47)	(0.85)	(2.11)		4.43
		C.I.P. concrete, as before		10.60
	(0.85)	(7.88)		10.20
		Precast concrete, as before		11.17
	(0.85)	(8.45)		10.77
		Structural steel, as before		12.07
	(0.85)	(9.35)		11.67

Table 3-1 (continued)

Roof membrane	Insulation	Roof deck	Structure	Total cost ($/sq. ft)
		Metal systems		
Lap seam, pre-formed, 22-ga. galvanized steel (2.11)	Fiberglass, blown, 5 in. thick, R-11 (0.51)	Wood trusses at 4 ft O.C. and 2 × 4 in. purlins at 2 ft O.C. (1.27)[b]		3.89
	(0.51)	Metal trusses and purlins (4.00)		6.62
Standing seam, field formed, 16-oz. copper (5.46)	Fiberglass, blown, as before (0.51)	Wood trusses at 2 ft O.C. and ½-in. C-D grade plywood deck (1.81)[b]		7.78
		Watershed systems		
Asphalt strip shingles, inorganic, Class A (0.87)	Fiberglass, blown, as before (0.51)	Wood, as before (1.58)		2.96
Roofs over 5 in./ft (1.12)	(0.51)	(1.58)		3.21
Roofs under 4 in./ft for snow areas or roofs under 3 in./ft for no-snow areas* (1.41)	(0.51)	(1.58)		3.50
As above except organic shingles (0.92)	(0.51)	(1.58)		3.01
Roofs over 5 in./ft (1.19)	(0.51)	(1.58)		3.28
Roof under 4 in./ft for snow areas or roofs under 3 in./ft for no-snow areas (1.46)	(0.51)	(1.58)		3.55

*These roofs rely on a 2-ply membrane underlayment in addition to shingles to prevent leaking. The increased cost reflects this addition.

Table 3-1 (continued)

Roof membrane	Insulation	Roof deck	Structure	Total cost ($/sq. ft)
Shakes, hand-split red cedar (1.75)	Fiberglass, blown, as before (0.51)	Wood, as before except substitute 1 × 4 in. nailing strips for ½-in. plywood (1.60)		3.86
Tiles, concrete, corrugated (2.65–4.70)	Fiberglass, blown, as before (0.51)	Wood joists with 1 × 4-in. nailing strips (2.00)		4.96-7.01
Clay, Spanish (4.05–10.25)	(0.51)	(2.00)		6.36 12.56
Metal, aluminum (2.20–7.00)	(0.51)	Wood, as before (1.58)		4.29-9.09

[a]O.C. = on center, PSF = pounds per square foot, C.I.P. = cast-in-place, EPDM = ethylene-propylene diene monomer, CSPE = chloro sulfonated polyethylene. Costs in parentheses indicate $/sq. ft, and shaded areas indicate the roof membrane and total costs for the system.

[b]Cost taken from M. J. Rosenfield and C. Doyle, *Sloped Roof Conversions for Small, Flat-Roof Buildings*, CERL Tech. Report M-85/05, Construction Engineering Research Laboratory, U.S. Army Corps of Engineers, Champaign, Ill., December 1984, and escalated to 1987 $'s.

Source: Based on *Means Assemblies Cost Data 1987*, 12th ed., Robert Snow Means Company, Inc., Kingston, Mass., 1986, except as indicated otherwise.

Impact of Increased Slope

The cost of increased roof slope can be determined by multiplying the roof's enlarged *surface* area by the cost per square foot of the desired roof system.

Figure 3-5 shows that roof *surface* area increases exponentially as roof slope is increased. Because initial cost is controlled by roof surface area, it will also increase exponentially with increased slope.

The sloped surface area of a roof can be calculated from the horizontal area and a multiplier. The relationship is

$$\text{Roof sloped surface area} = \text{Roof horizontal area} \times \text{Multiplier}$$

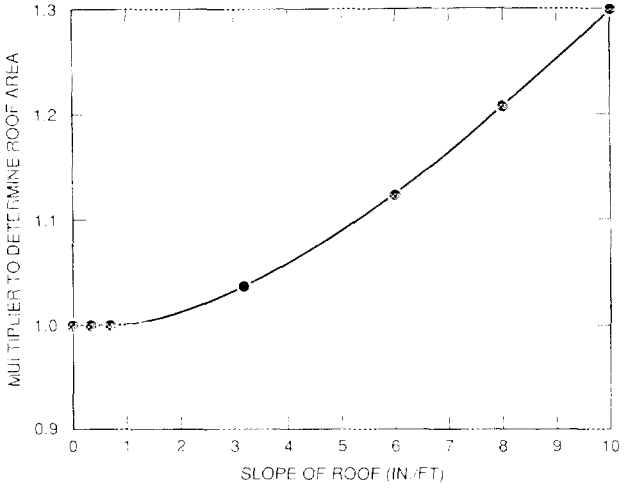

Fig. 3-5. Graph of the increase in roof surface area as roof slope increases.

The numerical multipliers for various slopes are

Slope (in./ft)	Multiplier
0	1.000
1/4	1.000
1/2	1.001
1	1.003
2	1.014
3	1.031
4	1.054
5	1.083
6	1.118
8	1.202
10	1.302

Table 3-2 uses these multipliers to show the cost increases per horizontal square foot resulting from slope increases of typical Air Force roof systems. Notice that there is no apparent impact until slope is increased to at least 1/2 in./ft. On the less expensive systems, such as wood, an increase in slope to 3 in./ft adds only $0.10 to cost over a flat roof. On more costly systems, a 3-in./ft slope adds $0.38 to the cost.

These data suggest that if incremental membrane costs are the only factor, providing a positive slope (1/4 to 1/2 in./ft) is definitely cost effective, while increasing the slope beyond that may require an LCC analysis to determine if the added initial cost is justified.

Initial Costs for Typical Air Force Building Closure

Figure 3-2 illustrated the amount of additional building closure that may be required by increased roof slope. The cost of building closure associated with a roof slope change can be significant and therefore should always be considered when costing roofing options.

Table 3-3 indicates the costs of typical Air Force building closure (e.g., gravel stops, parapet walls, and gables) systems that could

Table 3-2. The impact of increasing roof slope on the initial cost of typical Air Force roof systems[a]

Roof membrane	Insulation	Roof deck and structure	Cost per horizontal square foot (in plan) of roof system ($)					
			Roof slope (in./ft)					
			0	1/4	1/2	1	2	3
Asphalt with gravel 4-ply, fiberglass on nailable deck (1.41)	Fiberglass batt (0.39)	Wood (1.58)	3.38	3.38	3.38	3.39	3.42	3.48
	Rigid fiberglass (1.68)	Steel joist (2.11)	5.20	5.20	5.20	5.22	5.27	5.36
As above except mopped in place (1.35)		C.I.P. concrete (7.88)	10.91	10.91	10.92	10.94	11.06	11.25
		Precast concrete (8.45)	11.48	11.48	11.49	11.51	11.64	11.84
		Structural steel (9.35)	12.38	12.38	12.39	12.42	12.55	12.76

[a]C.I.P. = cast-in-place. Costs in parentheses are per square foot.

Table 3-3. Initial cost for typical Air Force building closure systems

Description	Cost ($)
Typically used with waterproof systems	
Increase height of gravel stop to cover increased slope (4 to 8-in. galvanized steel)	Additional cost per linear foot of gravel stop: 2.15
Increase height of parapet wall	Per square foot of parapet wall:
— face brick with metal stud backup	10.48
— face brick with concrete block backup	13.16
— deep groove concrete block with concrete block backup	11.21
Typically used with watershed systems	
Construct gable at end of roof	Per square foot of gable:
— face brick with wood stud backup	10.65
— concrete stucco on wood studs	6.98
— wood siding on wood studs	3.93

be impacted by varying the slope of the roof. Costs shown are from various Means estimating guides.[4–6]

Because the methods of enclosing additional roof slope depend on the specifics of the building being evaluated, it is not possible to generalize conclusions. It should be noted, however, that the unit costs for closure are large in comparison with many of the other costs associated with the roof system. It is therefore very important to determine the cost impact of added closure on a specific building before concluding that increased roof slope can be cost justified. An example of the cost impact of added building closure is shown in "EXAMPLE: Airmen's Club BUR Slope Evaluation" later in this section.

Initial Costs of Modified Roof Drainage Systems

Figure 3-4 illustrated two options in response to increased roof slope. One option was increased building closure, the other a modified drainage system design. When increases in roof slope cause a significant increase in closure costs, modifying the design of the roof drainage system can be a cost-effective option (see "EXAMPLE: Airmen's Club BUR Slope Evaluation").

Means[4–6] indicates the following costs for roof drains.

Roof drain costs

Description[a]	Cost ($)
Roof drain, DWV PVC 2-in.-diam. piping 10 ft high, each	347.00
Additional pipe, ft	9.21
Roof drain, DWV PVC 5-in.-diam. piping 10 ft high, each	745.00
Additional pipe, ft	18.45
Roof drain, C.I. soil single hub, 8-in. diam. 10 ft high, each	1625.00
Additional pipe, ft	36.30

[a]DWV PVC = drain, waste, and vent polyvinylchloride, C.I. = cast iron.

EXAMPLE: Airmen's Club BUR Slope Evaluation

A new Airmen's Club is being planned at Anywhere Air Force Base. The building design calls for a low-sloped waterproof roof system. A watershed system is not appropriate because of the building size and configuration (see Fig. 3-6). The engineer responsible for design criteria

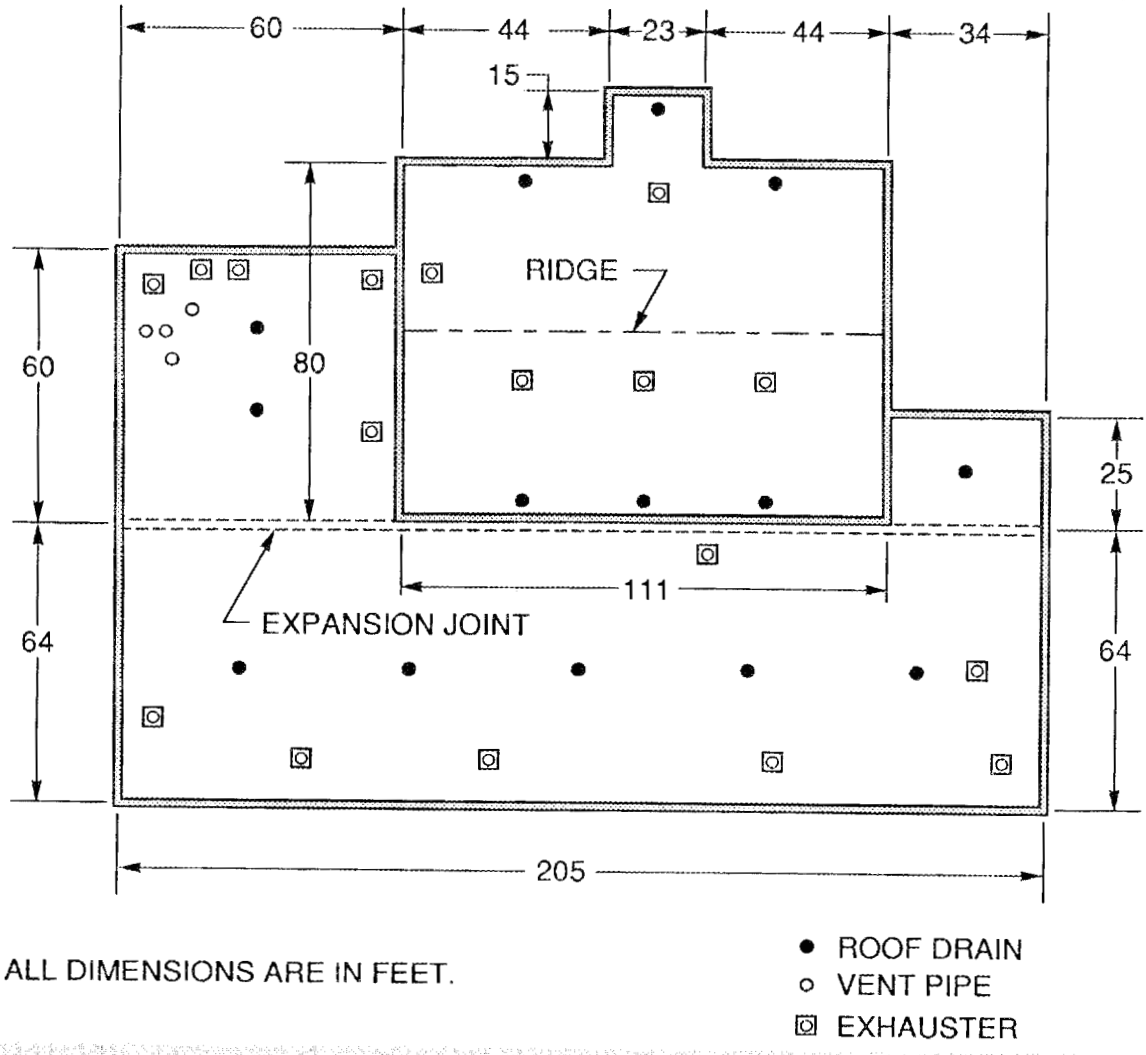

Fig. 3-6. Roof plan for Airmen's Club, Anywhere Air Force Base.

development has been asked to evaluate the relative impact on initial cost of three BUR slope options:

- 1/4 in./ft [minimum permitted for asphalt BURs in AFR 88-15 (reference 7)],

- 1 in./ft, and
- 3 in./ft (maximum potential for asphalt BURs).

The Airmen's Club roof construction is to be in accordance with common Air Force practice:

Roof insulation: Rigid fiberglass, two layers, R-10.6 (total)

Deck and structure: Exterior bearing walls and interior columns, joist girders and open web steel joists, and galvanized metal deck.

Roof membrane: Asphalt with gravel, 4-ply, fiberglass

Parapet walls: Standard running bond face brick with 6-in. concrete block backup, no insulation

Discussion and Analysis

Because only the slope of the roof is being varied, only those costs of the building impacted by slope will be considered. Not included are the cost of the roof penetrations, common to all options, or the building structure and walls below the supporting joists. In a building of this size, perimeter flashing constitutes a relatively small percentage of the total cost. The variation in this cost due to slope change is very small. Therefore, these costs are also not included.

	Slope/roof area		
	1/4 in./ft	1 in./ft	3 in./ft
Item	26,795 sq. ft	26,875 sq. ft	27,626 sq. ft
Deck and structure at $2.21/sq. ft	$59,217	$59,394	$61,053
Insulation at $1.68/sq. ft	$45,016	$45,150	$46,412
Roof membrane at $1.41/sq. ft	$37,781	$37,894	$38,953
Total initial cost of roof system	$142,014	$142,438	$146,418
Added cost of increased slope above 1/4 in./ft		$424	$4,404

	Added building closure		
	Wall length × increase height = increased area		
	1/4 in. ft	1 in./ft	3 in./ft
	Base case	512 ft × 2.0 ft = 1,024 sq. ft 412 ft × 2.5 ft = 1,030 sq. ft	512 × 7.34 = 3,758 sq. ft 412 × 9.17 = 3,778 sq. ft
Parapet wall at $13.90/sq. ft	None	$14,233 + $14,317 = $28,550	$52,236 + $52,514 = $104,750
Total cost of roof system and building closure	$142,014	$170,988	$251,168
Added cost of increased slope above 1/4 in./ft		$28,974	$109,154

	Modified roof drainage and added building closure[a]		
	Wall length × increase height = increased area		
	1/4 in./ft	1 in./ft	3 in./ft
	Base case	512 ft × 1.25 ft = 640 sq. ft 412 ft × 1.37 ft = 564 sq. ft	512 × 4.59 = 2,350 sq. ft 412 × 5.04 = 2,076 sq. ft
Parapet wall at $13.90/sq. ft		$8,896 + $7,840 = $16,736	$32,665 + $28,856 = $61,521
Additional drains, 14 at $422 each		$5,908	$5,908
Total cost of roof system drainage additions and building closure	$142,014	$165,082	$213,847
Added cost of increased slope above 1/4 in./ft		$23,068	$71,833

[a]Modified roof drainage reduces added building closure by allowing a lower parapet wall (see Fig. 3-4).

Notice that while the roof system cost increases as the slope increases, it is the added cost of building closure and drainage system modifications that have the greatest impact on the total building cost. At moderate slopes (1 in./ft), it is slightly more economical to modify the roof drainage system than to increase the building closure. At greater slopes (3 in./ft), this example shows that it is far more economical to divide the roof into smaller drainage areas and increase the number of roof drains than to provide the otherwise required building closure.

The cost of a 3-in./ft roof slope with traditional interior roof drains and parapet wall perimeter is so high as to immediately suggest that a different design approach is in order. A hipped-roof membrane and peripheral drainage system would eliminate the added closure cost. However, such an approach would be very difficult to apply to the Airmen's Club because of its multiple roofs and irregular building configuration.

Whether or not any increased cost due to a slope increase can be justified depends on the outcome of the LCC analysis for the building that is presented in "EXAMPLE: LCC of New Construction—Airmen's Club" (Sect. 4).

EXAMPLE: Airmen's Dormitory Roof Option Evaluation

For the new Airmen's Dormitory at Anywhere Air Force Base, the building design and configuration would permit the installation of either a waterproof or watershed roof. The engineer responsible for design criteria development has been asked to compare the relative initial costs of the following roof options:

- Asphalt BUR with 1/4-in./ft slope and
- Class A shingles with 4-in./ft slope.

The dormitory's roof construction (Fig. 3-7) is to be as follows:

Waterproof option —

Deck and structure: 1/2-in plywood, 2 × 12 in. joists at 16-in. on center (O.C.)

Drainage systems: Raised gravel stop and perimeter drains with interior polyvinylchloride (PVC) headers

Roof insulation: Rigid fiberglass, two layers, R-10.6 (total)

Roof membrane: Asphalt with gravel, 4-ply, fiberglass

Roof Ventilation: None required

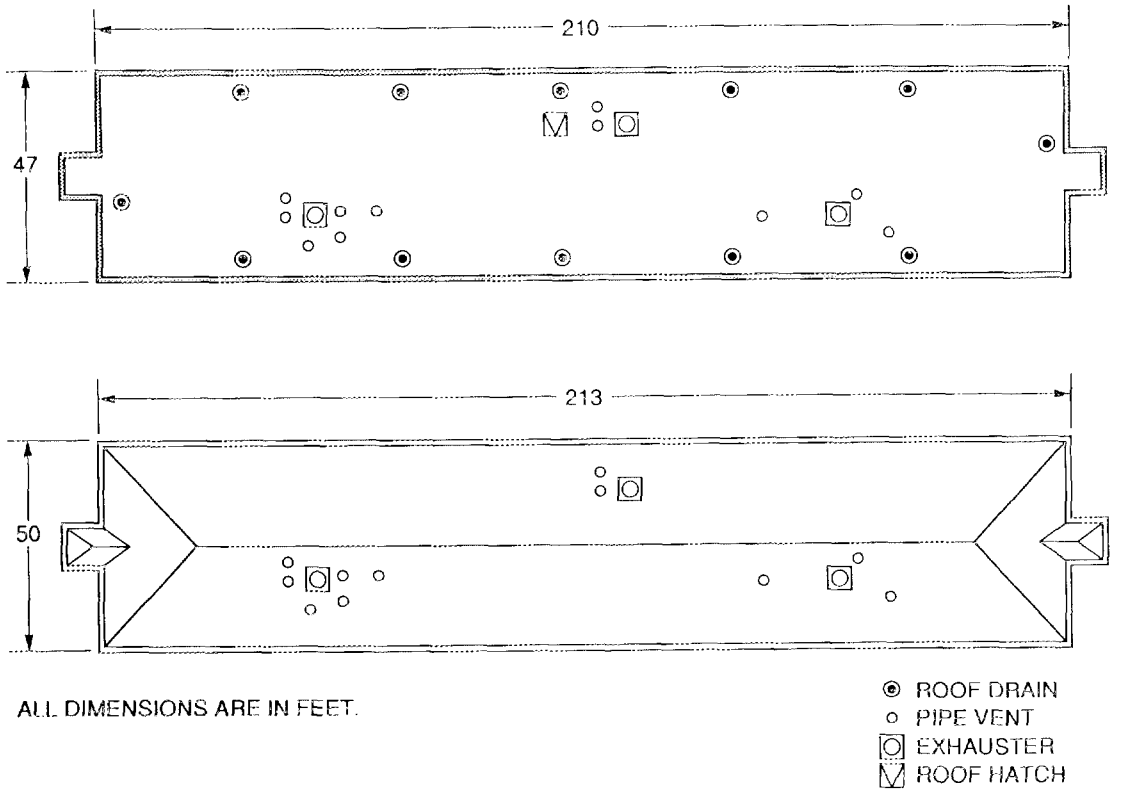

Fig. 3-7. Roof plans for Airmen's Dormitory, Anywhere Air Force Base.

Watershed option —

Deck and structure: 1/2-in. plywood, double-W wood trusses at 2-ft O.C.

Drainage system: perimeter gutters and downspouts

Roof insulation: Blown fiberglass, R-19

Roof membrane: Asphalt strip shingles, inorganic, Class A

Roof ventilation: Continuous soffit vents, ridge vent

Discussion and Analysis

For the sake of comparison, it was assumed that both roof structures would be constructed of wood. The full range of structural options was available to support the BUR, while the strip shingle roof requires a nailable deck. Those items common to both options are not included in the relative cost analysis because they will cancel each other. If a fairly detailed analysis is planned, it will be necessary to obtain some costs from sources other than the cost-estimating guides used in this document. If only a broad-brush analysis is desired, it may be possible to obtain rule-of-thumb numbers from local contractors and greatly simplify the analysis.

Waterproof option			Watershed option		
Deck* 9,870 sq. ft × 0.81	=	$7,995	Deck* 11,225 sq. ft × 0.81	=	$9,092
Structure 9,870 sq. ft × 1.14	=	11,252	Structure—wood trusses 5,250 lin. ft × 2.80	=	14,700
Gravel stop 514 lin. ft × 12.41	=	6,379	Eave and soffit 526 lin. ft × 3.20	=	820
Roof drain and drain line 8 × 422	=	3,376	Gutters 526 lin. ft × 3.20	=	1,683
8 × 10 lin. ft × 10.83	=	866			
Insulation* 9,870 sq. ft × 1.68	=	16,582	Downspouts 10 × 18 lin. ft × 3.21	=	578
Asphalt BUR 9,870 sq. ft × 1.41	=	13,917	Insulation 9,870 sq. ft × 0.86	=	8,488
			Shingles* 11,255 sq. ft × 0.88	=	9,878
			Soffit vent 500 lin. ft × 1.46	=	730
			Ridge vent 160 lin. ft × 3.37	=	540
		$60,367			$46,509

*Sloped area multiplier for 1/4 in./ft is 1.000. *Sloped area multiplier for 4 in./ft is 1.054.

In this example, the BUR will cost about $17,300 more initially, primarily the result of the use of rigid fiberglass insulation in the waterproof option, which is a common material used by the Air

Force. If a lower cost, approved foam insulation had been used, the costs would have been much closer together. A single-ply membrane and foam insulation combination could become cost competitive with the watershed option. The LCC analysis of these options is found in Sect. 4.

When the use of a combustible roof structure and deck is restricted or prohibited by code, the shingle option may no longer be viable. Each building should be analyzed on the basis of its individual requirements.

MAINTENANCE COST

Roof maintenance, as used in this guide, refers to all actions taken to ensure the continued satisfactory performance of a roof throughout its life. These actions include

- roof inspections (including ratings);
- general maintenance (such as clearing roofs or drains of debris);
- repairs (e.g., membranes, flashings, and drains);
- resurfacing of a BUR membrane (new flood-coat and aggregate); and
- partial replacement (such as replacing part of a roof where insulation has become wet).

These actions also protect the roof from a premature failure that could require a total replacement.

A roof repair is made to maintain an existing roof or roof section. (The roof of a larger building is normally sectioned to correspond with the sections of the building. Roof sections are recognized as separate roofs by the Air Force roof rating program.[8]) Complete replacement of a roof or roof section is not considered a repair. However, a partial replacement is a repair because it is undertaken to restore an existing roof and to preserve its life. An example would be the replacement of insulation, membrane, and surfacing where localized damage due to foot traffic occurred. If the entire roof or roof section had extensive deterioration or damage, a replacement would likely be done instead of repairing.

Maintenance costs in this guide do not include replacement costs. Care should be taken when developing actual roof maintenance costs at Air Force installations because roof replacements are often lumped together with repairs in repair contracts and in budget and expenditure reports.

Availability of Roof Maintenance Cost Data

Roof maintenance costs for watershed systems (shingles, shakes, and tiles) have not been developed. However, general consensus is that a well designed and properly installed watershed roof will have minimal maintenance requirements throughout its design life. With the exception of the repair of storm damage, maintenance usually consists of cleaning debris (e.g., leaves or pine needles) from the roof and gutter, if needed, and the inspection and repair of chimney flashings. To extend service life, shake roofs may receive extra cleaning and application of a wood preservative. Tile roofs, which have the potential of the tiles outlasting their fasteners, may also require refastening. Shakes and tiles are more expensive roofing systems and are usually chosen for reasons other than economics.

With this in mind, their added potential maintenance costs do not significantly affect the choice of these materials. It is suggested that $0.01/sq. ft be used as an annual maintenance cost in the LCC analysis for shingle roofs. This cost is adequate to cover typical shingle maintenance expenses.

Maintenance costs for metal roofs have not been well documented and can vary widely depending on the material, building design, and local climate conditions. A well-designed and properly installed metal roof, in a mild climate and noncorrosive environment, could be expected to have minimal maintenance requirements throughout its design life. On the other hand, the same roof installed in a cold, snowy climate could require periodic repair of the roof's joint sealant to keep it watertight from snow and ice-damming. In a corrosive environment (e.g., acid rain or salt spray), the same roof, if steel, could require periodic painting to achieve its design life. It is suggested that $0.01/sq. ft be used as an annual maintenance cost for metal roofs in mild climates, $0.02/sq. ft in snowy climates, and $0.03/sq. ft in corrosive environments.

Maintenance cost estimates for BURs available in published literature typically provide the cost of maintenance over the life of a roof as a percentage of the initial or replacement cost. These percentages range from 15 to 20% of the replacement cost[9] to 5 to 25% of replacement cost.[10] A 5-year maintenance agreement was reported to increase the initial costs by about 5 to 10%. For a 20-year roof life, these percentages translate to 0.25 to 1.25%/year for estimated maintenance costs and 1 to 2%/year for an initial 5-year maintenance agreement. If roof replacement costs $5.00/sq. ft, then estimated annual maintenance cost would be $.0125 to $0.0625/sq. ft. These figures are commonly based on the experience of those working in the field as opposed to well-documented summaries of actual cost data. Published data for actual waterproof roof (both BUR and single-ply roofs) maintenance costs are almost nonexistent.

Impact of Slope on Roof Maintenance

If a watershed roof has been constructed within the slope limitations described in Sect. 1, no evidence suggests that increasing the slope will reduce maintenance costs. Slope limits vary with climate. Localized areas of the roof where water concentrates (such as on the high side of a chimney) do, however, benefit from the increased slope provided by crickets.

Increasing the slope of metal roofs above the minimum required to perform satisfactorily shows no evidence of reducing maintenance costs. In some cases, maintenance costs would be expected to *increase* with an increase in slope. In a corrosive environment, when metal roofs require painting, the additional roof area of a higher sloped roof will cost more to paint. When through-the-roof fasteners are used, the greater length of a higher sloped roof will subject the fastener penetrations to greater movement because of expansion and contraction. This movement can enlarge the penetrations, causing them to leak and require additional maintenance.

Although no references were found to indicate that an increase in roof slope reduces BUR or single-ply maintenance costs, one clearly showed that positive drainage can reduce the magnitude of maintenance problems for BURs. In the study of 86 BURs,[11] 58% of the roofs with a slope less than 1/4 in./ft had leak problems, while only 11% of the roofs with 1/4-in./ft or more slope had leaks. Without adequate slope, ponding will occur, and a small failure in the membrane or flashing can become a major leak problem. It is likely that large amounts of water will enter the failure before it is repaired. This failure will demand immediate attention.

If positive drainage is provided, the significance of a failure on a waterproof roof may become much less. With positive drainage, water is moved off the roof and is less likely to come in contact with a small

puncture. This will depend on the location of the puncture. Although the puncture must be corrected, it may not require emergency repair. Areas where water concentrates, such as a drain valley, can still be a problem regardless of roof slope.

Repairs are performed more or less as roof problems are identified and are somewhat dependent on the problem severity, labor availability, building importance, and other factors. If maintenance costs are related to problem severity and positive drainage can reduce that severity, then adding slope to a dead flat BUR will likely reduce maintenance costs associated with that roof.

Air Force BUR Maintenance Cost Versus Slope

Data from various Air Force installations (see Appendix) were used to investigate the impact of slope on the repair costs of asphalt and coal tar BURs. Repair costs were collected from existing BUR annual reports, maintenance summaries, and data sheets from bases participating in an ORNL survey.

Identifying useful roof maintenance cost data proved difficult. Few bases had large amounts of roof maintenance cost data. Investigating the impact of slope on repair costs required considerable information on each roof receiving repair, including the cost, area, slope, and membrane type. This level of detail was generally not available. As a result, when repair data were sorted by membrane type and slope, the data were too limited to allow detection of a convincing relationship between increased roof slope and reduced repair cost.

Annual base BUR maintenance costs for operational buildings (excluding family housing) for all slopes averaged from $0.013 to $0.107/sq. ft. Repair costs were related to base size. Highest repair costs occurred at smallest bases with least BUR area and lowest costs occurred at bases with the largest BUR area. The average expenditure for repairs was $0.02/sq. ft of base BUR (excluding general maintenance and inspection costs and roof replacements) for approximately 8,000,000 sq. ft of roof. Although considerable contracted repairs occurred, the majority of repairs being done appeared to be patching or other minor repairs by in-house personnel to stop leaks.

Discussions with base roofing engineers indicated that, typically, $50/building is expended annually on the various inspections ($150 per building per inspection, every third year). Costs are more influenced by the number of buildings to be inspected and the amount of roof features (e.g., equipment and drains) than by the size of the roof. The annual $50/building cost represents about $0.005/sq. ft annually for a large roof of 10,000 sq. ft and about $0.03/sq. ft annually for a small roof of 1,600 sq. ft. Inspection costs are based on labor costs of approximately $20/work-hour. Buildings having many large roof sections (>3) and/or numerous features may warrant inspection costs >$50/year.

About one-half of the roofing engineers surveyed indicated that some type of non-destructive moisture inspection had been or is being done. Most of these inspections were limited to specific roofs and specific cases and are not being done regularly. Moisture inspection costs, based on total base BUR area, were found to range from less than $0.01/sq. ft where limited surveys were done to as much as $0.04/sq. ft for a base-wide infrared survey. This work indicates an overall maintenance cost for a BUR of $0.035 to $0.06/sq. ft is appropriate for use in the LCC analysis.

If base personnel have maintained records of the average roof maintenance costs (based on definitions outlined in this guide) for their installation, these values can be used in place of those discussed.

ROOF LIFE

Roof life, as used in this guide, is the period between the installation of a new roof or roof section and its replacement due to

deteriorated condition or failure. Roof life is highly variable because of factors such as

- variances in roof installation quality,
- funding and/or manpower availability to support appropriate roof maintenance,
- premature roof replacement in response to a failure's impact on building contents or function, and
- extension of roof life resulting from deferring the replacement of a roof because of a building's minimal importance.

As a result, two identically constructed roofs, particularly BURs, can have very different lives. These factors also influence the lives of other roofing membranes.

Availability of Roof Life Data

Data documenting the actual lives of roofs are scarce, but much of those that do exist[12,13] are based on projections of expected life (not actual life), are often not well documented, or lack important details, making them difficult to use. Projected life data from several Air Force installations were used to develop the BUR life estimates in this guide. Life projections for other types of roofing are based on the experience of knowledgeable individuals from industry trade associations, governmental organizations, and roofing consultants. Although there is not a complete consensus on these estimates, for longer roof lives (15 years and beyond), the impact of differing estimates often has minimal impact on the LCC of the roof. Life projections and estimates in this guide are provided to facilitate LCC of roofs and are not intended to represent expected performance of a given roof system.

Impact of Roof Slope on Roof Life

For watershed roofs that have non-continuous membranes, roof slope is used to keep water from penetrating the roof. Once adequate slope is achieved to ensure water-shedding, the effect of additional slope on roof life is minimal.

The impact of additional slope on roof life is most noticeable on waterproof roofs, particularly BURs, where ponding can cause premature deterioration. Both experience and limited research have shown that slope affects the durability of a BUR membrane. Roofing professionals point out that the use of appropriate slope to prevent ponding will increase the life of the membrane.[3,14,15] However, few have attempted to quantify the actual increase.

Air Force BUR Lives Versus Slope

The impact of slope on the lives of Air Force BURs was studied using projected roof life data developed under the Built-Up Roof Management Program.[8] Projected life consists of the age of the roof when rated plus the additional time that the roof is expected to be satisfactory for use on the basis of the rating. Actual life (until replacement) data were not available.

Data were collected for both coal tar and asphalt membranes. As a group (all slopes), the average projected life for an asphalt roof was 21.3 years. For coal tar, the average projected life was 26.8 years. These results suggest that coal tar BURs last longer than asphalt; however, this is not necessarily the case. Most of the coal tar BURs were installed during the 1950s and 1960s, while most of the asphalt BURs were installed more recently. Thus, the majority of coal tar roofs in the sample are older than the majority of asphalt roofs (the average age of coal tar BURs was 22.8 years; the average age of asphalt BURs was 15.5 years). Because the projected life is based on the actual age plus the additional time the roof is expected to be satisfactory for use, a coal tar BUR would be expected to have a somewhat longer projected life than that of an asphalt BUR.

The average projected lives at various roof slopes for Air Force coal tar and asphalt BURs are shown in Table 3-4. In addition to differences in life due to roof construction, materials, and maintenance variations, the projected life data reflect variability induced by the accuracy of the roof rating system

and the numerous people who performed the ratings. Confidence limits of 95% on projected life averages were as high as ±12 years for asphalt BURs and ±16 years for coal tar BURs. The magnitude of these limits reflects the large variabilities (uncertainties) that can be expected for BURs of the same slope, thus indicating the difficulty in projecting accurately the life of a specific BUR.

Roof Lives for LCC Analysis

A summary of roof lives to use in comparing the LCC results for the different roof options is presented in Table 3-5. The reader is urged to substitute actual life data whenever it is available for a particular Air Force installation.

Table 3-4. Impact of roof slope on the projected lives of Air Force BURs

Built-up roofing	Projected life (years)						
	Slope (in./ft)						
	0	1/8	1/4	1/2	1	2	3
Asphalt, 4-ply, aggregate	20.3	21.4	21.3	21.5	21.6	N.A	N.A
Coal tar pitch, 4-ply, aggregate	25.7	27.0	26.1	28.6	N.R.	N.R.	N.R.

N.A. = Not available.
N.R. = Not recommended practice.

Table 3-5. Projected or estimated lives for typical Air Force roofs

Type of roof	Projected or estimated roof life (years)	Comments
	Membrane roofing	
Built up		With ponding, poor design, installation, or maintenance, <10 years; with good drainage, design, installation, and maintenance, >30 years.
Asphalt, 4-ply, aggregate	<10 to >30	
Asphalt, 4-ply, capsheet	<10 to >30	
Coal tar pitch, 4-ply, aggregate	<10 to >30	
Single ply[a]		Life varies significantly with specific product used; experience in United States limited to <20 years; formulation of materials changing rapidly, resulting in little or no experience with some products.
Modified bitumen, smooth	20±	
Modified bitumen, granular	20±	
EPDM, smooth	20±	
EPDM, ballasted	20±	
CSPE, smooth	20±	
CSPE, ballasted	20±	
	Metal roofing	
Lap seams, steel	20 to >30	In corrosive environment, 20 years; in noncorrosive environment or with additional maintenance, >30 years.
Standing seams, steel	20 to >30	
	Shingle, shake, and tile roofing	
Asphalt shingles, inorganic	15 to 25	Heavier shingles and shakes last longer; life of shakes heavily dependent on maintenance and climate; tile life limited by fastener corrosion and specific product used.
Asphalt shingles, organic	15 to 20	
Shakes, wood	10 to 40	
Tiles, clay	15 to 75	

[a]EPDM = ethylene-propylene-diene monomer. CSPE = chloro sulfonated polyethylene.

REFERENCES

1. D. J. Walukus and G. E. Courville, *Decision Guide for Roof Insulation R-Value,* ORNL-6172, Oak Ridge National Laboratory, June 1985.
2. R. G. Riedel, "A Survey of Roofing Technology," *Mil. Eng.* 489, 438 (1983).
3. P. J. Monterose, "Reroof or Repair? Choose Carefully," *Constr. Specif.,* p. 81 (November 1986).
4. *Building Construction Cost Data 1986,* 44th ed., Robert Snow Means Company, Inc., Kingston, Mass., 1985.
5. *Means Assemblies Cost Data 1987,* 12th ed., Robert Snow Means Company, Inc., Kingston, Mass., 1986.
6. *Repair and Remodeling Cost Data 1987,* 8th ed., Robert Snow Means Company, Inc., Kingston, Mass., 1986.
7. *Criteria and Standards for Air Force Construction,* Department of the Air Force, AFR 88-15, January 1986.
8. *Built-Up Roof Management Program,* Air Force Manual 91-36, Department of the Air Force, September 1980.
9. J. Bradford, "Preventive Maintenance Can Help Extend Roof Life," *AIPE Facilities Management, Operations and Engineering,* p. 39 (November/December 1984).
10. W. J. Rossiter, Jr., W. C. Cullen, and R. G. Mathev, *Roof Management Programs,* NBSIR 85-3239, U.S. Department of Commerce, November 1985.
11. C. P. Hedlin, "Inspection and Maintenance of Flat Roofs," *Canadian Building Digest,* p. 179 (July 1976).
12. C. G. Cash, "Durability of Bituminous Built-Up Roofing Membranes," pp. 741–54 in *Durability of Building Materials and Components, ASTM STP 691,* ed. P.J. Sereda and G. G. Litvan, American Society for Testing and Materials, 1980.
13. State of North Carolina, Department of Administration, Division of State Construction, *Roofing Report by Division of State Construction,* March 1980, unpublished.
14. G. Van Ryzin, "Roof Design: Avoid Ponding by Sloping to Drain," *Civ. Eng. ASCE,* p. 77 (January 1980).
15. C. W. Griffin, "Draining the Roof," *The Roofing Industry Educational Institute,* originally appeared in *Roof Design* (March 1983).

Section 4
LIFE-CYCLE COSTING OF ROOFS

Once the roofing type(s) and slope options have been identified, the next step in the cost comparison is performing the LCC analysis of the options. This analysis consists of the following tasks:

- develop estimates for
  - initial costs,
  - maintenance costs,
  - energy costs, and
  - salvage values;
- complete the LCC worksheet; and
- interpret LCC results.

The LCC approach presented in this section is for costing roofs for new buildings and for costing replacements and conversions for existing waterproof roofs. The LCC methodologies for each are very similar but significant differences do exist. In costing these roofs, the roofing engineer should follow the methodology as it applies to all and then move to the specific part of this section that applies to the particular roofing case—new, replacement, or conversion.

LCC OF ROOFING OPTIONS

Develop Cost Estimates

Initial cost. Before beginning to cost materials and labor, the candidate roofing options should be examined for major differences in insulation R-value. If the insulation R-values of the options differ significantly, it will be necessary to obtain estimates of annual energy costs attributable to roof-related heat losses and gains or to adjust roof construction such that roofs with similar insulation R-values are compared. If annual roof-related energy costs are not available, roof insulation should be adjusted as recommended in Table 4-1 so that the influence of energy costs on the LCC analysis of the competing roofing options will be minimized.

Initial costs can be developed after the adjustment for insulation (if required) has been made.

Maintenance cost. Maintenance costs in Sect. 3 can be used for various roof options. Average annual maintenance costs based on actual experience can be used if records are available at the installation. The following annual maintenance costs are suggested for use in the LCC analysis if accurate data are unavailable.

BUR	\$0.03/sq. ft + \$50/building
Metal	\$0.01/sq. ft (mild climate) \$0.03/sq. ft (harsh climate)
Shingle	\$0.01/sq. ft

Energy cost. Costing by this guide provides two ways to account for the impact of roof-related energy costs on LCC. If estimates of roof-related energy costs can be made or are available, they can be entered directly into the costing equation. If estimates are unavailable, roof insulation can be adjusted as recommended in Table 4-1 so that roof-related energy costs for the two options are very similar. By using this approach, energy cost differences are assumed to essentially cancel one another in the LCC difference equation, and thus their evaluation for individual roofs is avoided. If the competing roofing options have the same insulation R-value or are adjusted to have insulation R-values meeting the requirements of Table 4-1, "NR" (for not required) can be entered for the energy cost term of each roof in the costing equation.

Table 4-1. Recommended insulation adjustment to minimize the impact of differing energy costs on life-cycle costing analysis when two roofing constructions have significantly different insulation R-values

Insulation types of roofs compared	Recommended insulation adjustment
Rigid vs blown-in or blanket	Use the R-value of the rigid insulation as a base and adjust the thickness of the blown-in or blanket insulation so that its R-value is equal to or above (within R-3) the rigid insulation R-value.
Blown-in vs blanket	Use the lowest design insulation R-value as a base and adjust the thickness of the other insulation so that the insulation R-values are equal or within R-3.

Salvage value. Roof salvage value varies dramatically depending upon whether the roof is for new construction, replacement, or conversion. Details for each specific case are provided accordingly under the applicable headings in this section.

Complete LCC Worksheet for Roof Slope Evaluation

The LCC worksheet (Fig. 4-1) should be completed as follows.

1. Enter roof description and check insulation R-value as described above.
2. Enter costs (a through h) as appropriate.
3. Enter roof lives (i and j) taken from Table 3-4 or 3-5.
4. Enter roof life (L) in cost factor identifiers (k through n) [i.e., (A/P)@20 and (A/F)@20 for L = 20 years].
5. Using cost factor identifiers, enter factors (k through n) from Table 4-2 [i.e., for L = 20: (A/P)@20 = 0.1175, (A/F)@20 = 0.0175].
6. Calculate difference in LCC between Option 1 and Option 2.

Repeat the above steps as required to analyze additional options being considered. Either Option 1 or Option 2 can be designated the base case as a point of comparison.

Interpret LCC Results

A positive difference between Option 1 and Option 2 indicates how much more Option 1 costs than Option 2. For a negative result, the minus sign (−) indicates that Option 2 costs more than Option 1.

For small LCC differences, errors in the cost of one of the elements (a through h) of the worksheet could change the outcome of the analysis. With this in mind, it is recommended that the judgment of a roofing professional be used to select the preferred option when the ratio of the LCC difference between the two options and the lowest annualized initial cost is less than 10%. When this ratio is above 10%, the results of the LCC analysis will provide a reliable indication of the most cost-effective option unless a gross error in a cost estimate (particularly initial cost) has been made.

LCC FOR NEW CONSTRUCTION

Develop Estimates

Initial cost. The initial cost of a new roof should consist of the costs for

1. design and installation of the new roof, including components such as the membrane, aggregate, insulation, flashing, and drains;

Fig. 4-1. LCC WORKSHEET FOR ROOF SLOPE EVALUATION					
Option 1			Option 2		
Roof description: Insulation R-value:			Roof description: Insualtion R-value:		
Initial cost	=	_____ (a)	Initial cost	=	_____ (b)
Maintenance cost	=	_____ (c)	Maintenance cost	=	_____ (d)
Energy cost	=	_____ (e)	Energy cost	=	_____ (f)
Salvage value	=	_____ (g)	Salvage value	=	_____ (h)
Roof life, L	=	_____ (i)	Roof life, L	=	_____ (j)
(A/P)@L = (A/P)@____	=	_____ (k)	(A/P)@L = (A/P)@____	=	_____ (l)
(A/F)@L = (A/F)@____	=	_____ (m)	(A/F)@L = (A/F)@____	=	_____ (n)

Difference in LCC (annualized dollars)

$= (a \times k) - (b \times l) + (c - d) + (e - f) - (g \times m) + (h \times n)$

= (_____ × _____) − (_____ × _____) + (_____ − _____) + (_____ − _____) − (_____ × _____) + (_____ × _____)

= (_____) − (_____) + (_____) + (_____) − (_____) + (_____)

= $ _____ /year.

Is magnitude of answer greater than 10% of the lower of (a × k) or (b × l)?

____ yes, analysis is valid.

____ no, analysis is too close to call; use professional judgment.

Table 4-2. Cost factors by year for a 10% discount rate* for use with Fig. 4-1 LCC Worksheet for Roof Slope Evaluation

Life (years)	(A/P)	(A/F)
1	1.1000	1.0000
2	0.5762	0.4762
3	0.4021	0.3021
4	0.3155	0.2155
5	0.2638	0.1638
6	0.2296	0.1296
7	0.2054	0.1054
8	0.1874	0.0874
9	0.1736	0.0736
10	0.1627	0.0627
11	0.1540	0.0540
12	0.1468	0.0468
13	0.1408	0.0408
14	0.1357	0.0357
15	0.1315	0.0315
16	0.1278	0.0278
17	0.1247	0.0247
18	0.1219	0.0219
19	0.1195	0.0195
20	0.1175	0.0175
21	0.1156	0.0156
22	0.1140	0.0140
23	0.1126	0.0126
24	0.1113	0.0113
25	0.1102	0.0102
26	0.1092	0.0092
27	0.1083	0.0083
28	0.1075	0.0075
29	0.1067	0.0067
30	0.1061	0.0061
35	0.1037	0.0037
40	0.1023	0.0023
45	0.1014	0.0014
50	0.1009	0.0009
100	0.1000	0.0000

*A = annual worth, P = present worth, and F = future worth. Cost factors or ratios such as (A/P) and (A/F), read as "A over P" and "A over F," are used to change a cost or benefit that occurs at a specific time to its equivalent value in another time [i.e., A = P × (A/P) and A = F × (A/F)]. Initial cost (a present worth) and salvage value (a future worth) are converted to annual equivalents by the use of these factors. For example, at 10% interest for a life, L, of 20 years, an initial cost of $10,000 is equivalent to 20 annual payments of:

A = P × (A/P) @ 20 = $10,000 × 0.1175 = $1175 per year.

2. roof structural components such as trusses or joists, and roof decking;
3. any wall areas (gable or parapet walls) required by an increase in roof slope to enclose the building; and
4. any other actions taken as a result of changing the roof design to permit increasing roof slope (e.g., rooftop equipment mounting modification, drain modification or addition, and extension of vents).

Salvage value: roofs for new buildings. Roof salvage value for new building construction represents the value of the roof insulation (if reusable) and the value of the roof structural system and drainage system at the end of the roof membrane's useful life (replacement). Current Air Force policy for BUR replacement specifies removal of all existing roofing material to the deck. Thus, no salvage value can be included for above-deck insulation. For new roofs, the salvage value to be recorded on the worksheet is the initial cost of the salvageable (reusable at the end of the roof life) components of the roof system.

If any of the potentially salvageable components are not expected to be reusable at the end of the roof's life, they should be omitted from the salvage value.

LCC FOR REPLACEMENT OF WATERPROOF ROOFS

Develop Estimates

Initial cost. The initial cost of a waterproof replacement roof should include the costs for

1. tear-off of the existing roof (if required by the option);
2. design and installation of the replacement roof, including components such as membrane, aggregate, insulation, flashing, and drains;
3. any *added or modified* roof structural components required by the increase in roof slope;

4. any *added* parapet or gable wall areas required for increased building closure resulting from an increase in roof slope; and
5. any other actions taken as a result of modifying the roof to permit increasing roof slope (e.g., rooftop equipment relocation, drain relocation or addition, and extension of vents).

Salvage value. Current Air Force policies for BUR replacement specify removal of existing roofing material to the deck. Thus, no salvage value is included when costing a BUR replacement.

EXAMPLE: LCC of New Construction—Airmen's Club

The Airmen's Club BUR Slope Evaluation introduced in Sect. 3 provides an opportunity to use the LCC procedure for evaluating the cost difference between a BUR sloped at 1/4 in./ft, Option 1; a BUR sloped at 1 in./ft, Option 2; and a BUR sloped at 3 in./ft, Option 3.

The description and initial costs are found in Sect. 3. No energy costs are required because the insulation R-values of the three options are the same. In addition to initial cost differences between options, the length of membrane life must be considered. The roofing engineer's experience at Anywhere Air Force Base places a realistic life for Option 1 at 19 years and Options 2 and 3 at 23 years. Table 3-4 indicated the *average* lives of this type of roof to be 21.3 years for 1/4 in./ft and 21.6 years for 1 in./ft. Actual experience is superior to averages and should be used when available. Maintenance costs at the base are typically about $0.04/sq. ft for BURs with positive slope. The salvage value of each option is the initial total roof cost minus the membrane and insulation costs because they will be replaced at the end of the membrane's life.

With this data, the roofing engineer fills out the LCC worksheet.

Option 1				Option 2			
Roof Description: 1/4-in./ft asphalt BUR				Roof Description: 1-in./ft asphalt BUR			
Insulation R-value: 10.6				Insulation R-value: 10.6			
Initial cost	=	$142,014	(a)	Initial cost	=	$170,988	(b)
Maintenance cost	=	$1,072	(c)	Maintenance cost	=	$1,072	(d)
Energy cost	=	NR	(e)	Energy cost	=	NR	(f)
Salvage value	=	$59,217	(g)	Salvage value	=	$59,394	(h)
Roof life, L	=	19 years	(i)	Roof life, L	=	23 years	(j)
(A/P)@L = (A/P)@19	=	0.1195	(k)	(A/P)@L = (A/P)@23	=	0.1126	(l)
(A/F)@L = (A/F)@19	=	0.0195	(m)	(A/F)@L = (A/F)@23	=	0.0126	(n)

(continued)

Difference in LCC (annualized dollars)

$= (a \times k) - (b \times l) + (c - d) + (e - f) - (g \times m) + (h \times n)$

$= (142{,}014 \times 0.1195) - (170{,}988 \times 0.1126) + (1{,}072 - 1{,}072) + (NR - NR) - (59{,}217 \times 0.0195) + (59{,}394 \times 0.0126)$

$= (16{,}970.7) - (19{,}253.2) + (0) + (0) - (1{,}155) + (748)$

$= -\$2689.5/\text{year}.$

Is magnitude of answer greater than 10% of the lower of (a × k) or (b × l)?

✓ yes, analysis is valid.

_____ no, analysis is too close to call; use professional judgment.

Option 2 costs $2,689 more per year than Option 1.

The cost difference is 16% of the lower annualized initial cost ($16,970.70). Therefore, the analysis is valid.

Option 1				Option 3			
Roof Description: 1/4-in./ft asphalt BUR				Roof Description: 3-in./ft asphalt BUR			
Insulation R-value: 10.6				Insulation R-value: 10.6			
Initial cost	=	$142,014	(a)	Initial cost	=	$251,168	(b)
Maintenance cost	=	$1,072	(c)	Maintenance cost	=	$1,104	(d)
Energy cost	=	NR	(e)	Energy cost	=	NR	(f)
Salvage value	=	$59,217	(g)	Salvage value	=	$61,053	(h)
Roof life, L	=	19 years	(i)	Roof life, L	=	23 years	(j)
(A/P)@L = (A/P)@19	=	0.1195	(k)	(A/P)@L = (A/P)@23	=	0.1126	(l)
(A/F)@L = (A/F)@19	=	0.0195	(m)	(A/F)@L = (A/F)@23	=	0.0126	(n)

Difference in LCC (annualized dollars)

$= (a \times k) - (b \times l) + (c - d) + (e - f) - (g \times m) + (h \times n)$

$= (142{,}014 \times 0.1195) - (251{,}168 \times 0.1126) + (1{,}072 - 1{,}104) + (NR - NR) - (59{,}217 \times 0.0195) + (61{,}053 \times 0.0126)$

$= (\mathbf{16{,}970.7}) - (\mathbf{28{,}281.5}) + (-32) + (0) - (1{,}154.7) + (769.3)$

$= -\$11{,}728.2/\text{year}.$

Is magnitude of answer greater than 10% of the lower of (a × k) or (b × l)?

✓ yes, analysis is valid.

_____ no, analysis is too close to call; use professional judgment.

Option 3 costs $11,728 more per year than Option 1.

The cost difference is 69% of the lowest annualized initial cost ($16,970.70). Therefore, the analysis is valid.

Option 1 is clearly the most cost-effective option.

Out of curiosity, the roof engineer analyzed Options 1 and 2 again, but this time assumed that the 1-in./ft BUR would last the life of the building (100 years). The analysis did not change the outcome. A 1-in./ft BUR with a life of 100 years cost $2,158/year more than the 1/4-in./ft BUR with a life of 19 years. For this example, the increases in slope above 1/4 in./ft cannot be cost justified regardless of what changes are made in the cost elements other than initial cost.

EXAMPLE: LCC of New Construction—Airmen's Dormitory

The Airmen's Dormitory discussed in Sect. 3 is to be evaluated for both a waterproof and a watershed roof system. The LCC procedure can be used to evaluate the cost difference between a 1/4-in./ft asphalt BUR, Option 1, and a 4-in./ft asphalt strip shingle roof, Option 2.

Roof descriptions and initial costs are given in Sect. 3. Because no roofing-related energy costs are available, the base roofing engineer must adjust the roof's insulation on the basis of Table 4-1. Because the BUR has insulation of R-10.6 and the shingled roof has insulation of R-19, the insulation of the shingled roof should be adjusted from R-19 to R-11 (as recommended in Table 4-1) for LCC purposes. The change to R-11 reduces the initial cost of the shingled roof option to $43,055 ($0.51/sq. ft for R-11 vs $0.86/sq. ft for R-19).

Maintenance costs are $394/year for the BUR and $112/year for the shingled roof (based on $0.04/sq. ft for BUR and $0.01/sq. ft for shingled roof). Because the options are being costed on an equivalent R-value basis, no energy costs are required. The salvage value for the BUR is estimated at $23,489 (deck, structure, roof drain, and drain line). The salvage value of the shingled roof is estimated at $29,646 (deck, structure, eave and soffit, and R-11 insulation). The roof life of each option has been estimated by the base roofing engineer to be approximately 19 years.

With this data, the roofing engineer fills out the LCC worksheet.

(continued)

Option 1				Option 2			
Roof Description: 1/4-in./ft asphalt BUR				Roof Description: 4-in./ft asphalt strip shingle			
Insulation R-value: 10.6				Insulation R-value: 11 (adjusted)			
Initial cost	=	$60,367	(a)	Initial cost	=	$43,055	(b)
Maintenance cost	=	$394	(c)	Maintenance cost	=	$112	(d)
Energy cost	=	NR	(e)	Energy cost	=	NR	(f)
Salvage value	=	$23,489	(g)	Salvage value	=	$29,646	(h)
Roof life, L	=	19 years	(i)	Roof life, L	=	19 years	(j)
(A/P)@L = (A/P)@19	=	0.1195	(k)	(A/P)@L = (A/P)@19	=	0.1195	(l)
(A/F)@L = (A/F)@19	=	0.0195	(m)	(A/F)@L = (A/F)@19	=	0.0195	(n)

Difference in LCC (annualized dollars)

$= (a \times k) - (b \times l) + (c - d) + (e - f) - (g \times m) + (h \times n)$

$= (60{,}367 \times 0.1195) - (43{,}055 \times 0.1195) + (394 - 112) + (NR - NR) -$
$(23{,}489 \times 0.0195) + (29{,}646 \times 0.0195)$

$= (7{,}213.8) - (5145) + (282) + (0) - (458) + (578)$

$= \$2470.8/\text{year}.$

Is magnitude of answer greater than 10% of the lower of (a × k) or (b × l)?

✓ yes, analysis is valid.

_____ no, analysis is too close to call: use professional judgment.

Option 1 costs $2472 more per year than Option 2.

The cost difference is 48% of the lower annualized initial cost ($5145). Therefore, the analysis is valid.

Option 2 is clearly the cost-effective option.

EXAMPLE: LCC of Slope Increase During Roof Replacement

The Airmen's Dormitory (Roof Conversion Evaluation) introduced in Sect. 2 provides an opportunity to use the LCC procedure for evaluating the cost difference between replacement in kind (dead flat BUR), Option 1, and replacement with a BUR sloped at 1/4 in./ft, Option 2.

The description and initial costs are given in Sect. 2. In addition to the initial cost differences between Options 1 and 2, the length of membrane life must be considered. The expected life of a dead flat asphalt BUR is perhaps 10 to 15 years, while the expected life of a 1/4-in./ft roof is about 20 or more years (see Table 3-4). The base roofing engineer's experience at Anywhere Air Base suggests that a more realistic life for Option 1 is 12 years and, for Option 2, 19 years. Maintenance costs at the base are typically about \$0.06/sq. ft for flat BURs and \$0.04/sq. ft for BURs with positive slope. With this data, the roofing engineer fills out the LCC worksheet. Salvage values are \$0 because the replacement insulation and membrane will not be reused at the end of the membrane's life.

Option 1			Option 2		
Roof Description: Dead flat asphalt BUR			Roof Description: 1/4 in./ft asphalt BUR		
Insulation R-value: 13			Insulation R-value: 13		
Initial cost	=	\$52,120 (a)	Initial cost	=	\$60,225 (b)
Maintenance cost	=	\$594 (c)	Maintenance cost	=	\$396 (d)
Energy cost	=	NR (e)	Energy cost	=	NR (f)
Salvage value	=	\$0 (g)	Salvage value	=	\$0 (h)
Roof life, L	=	12 years (i)	Roof life, L	=	19 years (j)
(A/P)@L = (A/P)@12	=	0.1468 (k)	(A/P)@L = (A/P)@19	=	0.1195 (l)
(A/F)@L = (A/F)@12	=	0.0468 (m)	(A/F)@L = (A/F)@19	=	0.0195 (n)

Difference in LCC (annualized dollars)

$= (a \times k) - (b \times l) + (c - d) + (e - f) - (g \times m) + (h \times n)$

$= (52{,}120 \times 0.1468) - (60{,}225 \times 0.1195) + (594 - 396) + (NR - NR) - (0 \times 0.0468) + (0 \times 0.0195)$

$= (7651.2) - (7196.9) + (198)$

$= \$652.3/\text{year}.$

Is magnitude of answer greater than 10% of the lower of (a × k) or (b × l)?

..... yes, analysis is valid.

✓ no, analysis is too close to call; use professional judgment.

Option 1 costs \$652 more per year than Option 2.

In this example, a roof that costs about 14% less initially costs more on an LCC basis. Although the LCC difference between options is small (9% of the least annualized initial cost), the roofing engineer has a high degree of confidence in the initial cost estimates and projected roof lives because they reflect much of the current experience at Anywhere Air Force Base. Therefore, Option 2 is the cost-effective option for the Airmen's Dormitory.

LCC FOR CONVERSION TO WATERSHED ROOFS

Develop Estimates

Initial cost. Initial cost for conversions to watershed should include costs for

1. partial or complete tear-off of the existing roof (if required by the option); and
2. design and installation of the conversion roof, including
   a. roof membrane (e.g., shingles and metal);
   b. new structural components to support the roof conversion such as trusses, joists, and decking;
   c. any *added* gable or parapet wall areas required by the design of the conversion roof to enclose the building; and
   d. other actions taken to permit the conversion (e.g., modification of building structure, relocation of roof-top equipment, and costs for new or added roof-drainage components).

Salvage value. Roof salvage value for conversions is the first (initial) cost of the new roof deck and structural system as well as insulation that will be reusable at the end of the conversion's life (when it is replaced). The initial cost of the salvageable components should be entered for salvage value on the LCC worksheet.

For the particular conversion being installed, if any of the potentially salvageable components discussed are not expected to be reusable at the end of the conversion's life, then they should be omitted from the salvage value.

When an existing BUR is being converted to a watershed system, the existing roof membrane and insulation could, in some cases, be left in place. Should the insulation be in good condition and of the type that retains its R-value over the long term, some salvage value may be accrued. However, as opposed to considering the insulation in the salvage value term, most of its value will be accounted for by the fact that less new insulation will have to be added to the new conversion roof, thereby reducing the initial cost of conversion.

EXAMPLE: LCC of Roof Conversion—Airmen's Dormitory

The Airmen's Dormitory discussed earlier in this section was also evaluated for conversion to a watershed system. The LCC procedure can be used to evaluate the cost difference between conversion, Option 1 (described in Sect. 2), and replacement with a BUR sloped at 1/4 in./ft, Option 2.

The initial costs are given in Sect. 2. The roof lives of both options have been determined by the base roofing engineer to be approximately 19 years. Maintenance costs at the base on strip shingle roofs are typically about $0.01/sq. ft while the BUR will cost $0.04/sq. ft. Energy costs are not required because both Options 1 and 2 have the same R-value of insulation. The shingle roof has a salvage value of $21,170 for the structure and deck, $6,430 for reusable insulation, and $2,800 for the new air conditioning unit mounting platforms, for a total value of $30,400. The gutters

and downspouts, soffit, and roof ventilation are assumed to be replaced when the shingles are replaced in 19 years.

With this data, the roofing engineer fills outs the LCC worksheet.

Option 1				Option 2			
Roof Description: Conversion to shingle				Roof Description: 1/4 in./ft asphalt BUR			
Insulation R-value: 13				Insulation R-value: 13			
Initial cost	=	$45,340	(a)	Initial cost	=	$60,225	(b)
Maintenance cost	=	$100	(c)	Maintenance cost	=	$396	(d)
Energy cost	=	NR	(e)	Energy cost	=	NR	(f)
Salvage value	=	$30,400	(g)	Salvage value	=	0	(h)
Roof life, L	=	19 years	(i)	Roof life, L	=	19 years	(j)
(A/P)@L = (A/P)@19	=	0.1195	(k)	(A/P)@L = (A/P)@19	=	0.1195	(l)
(A/F)@L = (A/F)@19	=	0.0195	(m)	(A/F)@L = (A/F)@19	=	0.0195	(n)

Difference in LCC (annualized dollars)

$= (a \times k) - (b \times l) + (c - d) + (e - f) - (g \times m) + (h \times n)$

$= (45{,}340 \times 0.1195) - (60{,}225 \times 0.1195) + (100 - 396) + (NR - NR) - (30{,}400 \times 0.0195) + (0 \times 0.0195)$

$= \mathbf{(5418.1)} - \mathbf{(7196.8)} + (-296) + (0) - (732.6) + (0)$

$= -\$2807.3/\text{year}.$

Is magnitude of answer greater than 10% of the lower of (a × k) or (b × l)?

✓ yes, analysis is valid.

____ no, analysis is too close to call; use professional judgment.

Option 2 costs $2807 more per year than Option 1.

In this example, the initial cost dominated the analysis. Option 1 has the lower initial cost and LCC. However, the lower maintenance cost and higher salvage value of Option 1 would have permitted it to have a somewhat higher initial cost than Option 2 and still be the cost-effective choice.

EXAMPLE: LCC of Roof Conversion—Communications Building

The Communication Building-Roof Section "C" presented in Sect. 2 has three options for evaluation. These are

- replace roof with 1/4-in./ft slope BUR (Option 1),
- Convert to 1/4-in./ft slope standing seam metal roof (Option 2), and
- Convert to 2-in./ft slope asphalt strip shingles (Option 3).

The particulars on each option as determined by the roof engineer are

Option 1 will have

— a life of approximately 19 years and

— maintenance costs of $0.04/sq. ft.

Option 2 will have

— a life of approximately 30 years,

— maintenance cost $0.02/sq. ft, and

— a salvage value of $4,260 (support structure, building closure, and insulation).

Option 3 will have

— a life of approximately 19 years,

— maintenance cost of $0.01/sq. ft, and

— a salvage value of $6,520 (support structure, building closures, waterproof underlayment, and insulation).

Energy costs are not required because all options are to be built with the same R-value.

With this data, the roofing engineer fills out the LCC worksheet.

Option 1				Option 2			
Roof Description: 1/4 in./ft asphalt BUR				Roof Description: 1/4 in./ft standing seam metal roof			
Insulation R-value: 13				Insulation R-value: 13			
Initial cost	=	$15,320	(a)	Initial cost	=	$13,760	(b)
Maintenance cost	=	$96	(c)	Maintenance cost	=	$48	(d)
Energy cost	=	NR	(e)	Energy cost	=	NR	(f)
Salvage value	=	0	(g)	Salvage value	=	$4,260	(h)
Roof life, L	=	19 years	(i)	Roof life, L	=	30 years	(j)
(A/P)@L = (A/P)@19	=	0.1195	(k)	(A/P)@L = (A/P)@30	=	0.1061	(l)
(A/F)@L = (A/F)@19	=	0.0195	(m)	(A/F)@L = (A/F)@30	=	0.0061	(n)

Difference in LCC (annualized dollars) for Options 1 and 2

$= (a \times k) - (b \times l) + (c - d) + (e - f) - (g \times m) + (h \times n)$

$= (15{,}320 \times 0.1195) - (13{,}760 \times 0.1061) + (96 - 48) + (NR - NR) - (0 \times 0.0195) + (4{,}260 \times 0.0061)$

$= (\mathbf{1830.7}) - (\mathbf{1459.9}) + (48) + (0) - (0) + (26)$

$= \$444.8/\text{year}.$

Is magnitude of answer greater than 10% of the lower of (a × k) or (b × l)?

✓ yes, analysis is valid.

_____ no, analysis is too close to call; use professional judgment.

Option 1 costs $445 more per year than Option 2.

Option 2				Option 3			
Roof Description: 1/4 in./ft standing seam metal roof				Roof Description: 2 in./ft asphalt strip shingles			
Insulation R-value: 13				Insulation R-value: 13			
Initial cost	=	$13,760	(a)	Initial cost	=	$12,880	(b)
Maintenance cost	=	$48	(c)	Maintenance cost	=	$24	(d)
Energy cost	=	NR	(e)	Energy cost	=	NR	(f)
Salvage value	=	$4,260	(g)	Salvage value	=	$6,520	(h)
Roof life, L	=	30 years	(i)	Roof life, L	=	19 years	(j)
(A/P)@L = (A/P)@30	=	0.1061	(k)	(A/P)@L = (A/P)@19	=	0.1195	(l)
(A/F)@L = (A/F)@30	=	0.0061	(m)	(A/F)@L = (A/F)@19	=	0.0195	(n)

Difference in LCC (annualized dollars) for Options 2 and 3

$= (a \times k) - (b \times l) + (c - d) + (e - f) - (g \times m) + (h \times n)$

$= (13{,}760 \times 0.1061) - (12{,}880 \times 0.1195) + (48 - 24) + (NR - NR) - (4{,}260 \times 0.0061) + (6{,}520 \times 0.0195)$

$= (\mathbf{1459.9}) - (\mathbf{1539.2}) + (24) + (0) - (26) + (127.1)$

$= \$45.8/\text{year}.$

(continued)

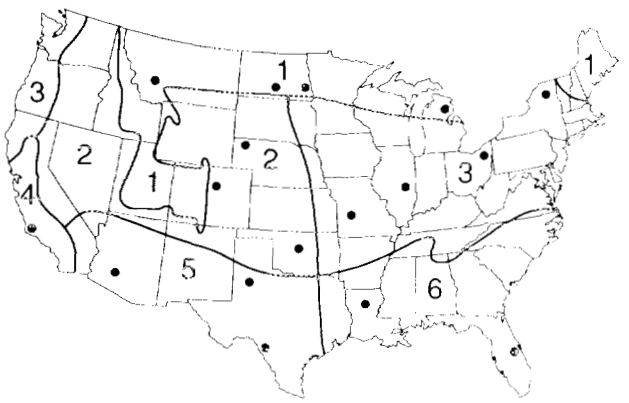

Fig. A.1. Map of the United States showing climate regions and bases participating in data collection.

Collection and Analysis of BUR Projected Life Data

Data collection involved two phases. Initially, life and roof construction details were assembled by requesting copies of existing AF Forms 1059 (Roof Summary Form) and 1060 (Roof Inspection and Rating Worksheet) and roof plans developed as part of roof ratings. Forms for over 500 buildings were received, representing more than 1000 roofs. Selecting those roofs where required data were complete resulted in a final group of 486 roofs for use in investigating roof life.

This group was separated by asphalt and coal tar membrane types. Roofs were also separated by slope. Average projected roof lives and respective sample sizes for each slope and membrane are detailed in Table A-2. The average lives in Table A-2 are used for life-cycle costing in accordance with this guide (see Sect. 3 of *Decision Guide for Roof Slope Selection*). The sample contained aggregate, mineral cap sheet, and smooth-surface asphalt roofs and aggregate-surface coal tar roofs.

In the analysis of the projected life data, it was discovered that asphalt roofs at 1-in./ft slope were much older than other roofs in the data base. Because projected life can be controlled by the age of the roof, it was necessary to normalize for roof age in the analysis. No statistically significant differences were found among any of the asphalt projected life averages. In other words, there is no assurance that another sample of roof would produce the same results. The results for the analysis of coal tar roofs indicated that roofs having a slope of 1/2 in./ft would give a longer life than similar roofs that were dead flat or sloped at 1/4 in./ft. While the averages at 1/8 in./ft and 1/2 in./ft were 1.6 years apart, the data indicate that, given the sample used, this difference is too close to detect a statistically significant difference.

Collection and Analysis of BUR Maintenance Data

The second group of data collected was BUR maintenance cost data. These data were requested on forms provided to each base (Fig. A-2). Success in the assembling of maintenance cost data varied widely among participating bases. The requested data were

Table A-2. Average projected lives and respective sample sizes by membrane type and slope

	Roof slope (in./ft)					
	0	1/8	1/4	1/2	1.0	2.0
Asphalt						
Average projected life, years	20.3	21.4	21.3	21.5	21.6	21.7
Number of roofs sampled	35	60	133	97	50	7
Coal tar						
Average projected life, years	25.7	27.0	26.1	28.6		
Number of roofs sampled	19	25	18	17	0	0

Is magnitude of answer greater than 10% of the lower of (a × k) or (b × l)?

_____ yes, analysis is valid.

✓ no, analysis is too close to call; use professional judgment.

Option 2 costs $46 more per year than Option 3.

In this example, Option 1 is clearly the most costly approach—both from an initial cost and LCC viewpoint. The difference between Options 2 and 3 is less obvious. Option 3 has a lower (11%) initial cost and a lower LCC cost. However, the difference in LCC cost is sufficiently small (8% of the least annualized initial cost) that minor errors in the cost factors could change the outcome. For example, a 10% increase in the initial cost and salvage value of Option 3 would place it at $10.40 more per year than Option 2, thereby reversing the LCC outcome. With this in mind, it is recommended that the judgment of a roofing professional govern when the ratio of the cost difference to the least initial cost is less than 10%.

Appendix
ORNL SURVEY OF AIR FORCE BUR MAINTENANCE COSTS AND LIVES

SELECTION OF AIR FORCE BASES

Data collection for the built-up roof (BUR) maintenance costs and lives survey was designed such that varied climatic regions of the continental United States would be represented by Air Force bases. Six regions were identified, and data from three bases in each region (18 bases total) were determined to be a reasonable sample to represent the Air Force. Contacts with over 50 bases indicated that the bases were in different stages of inspection and rating. As a result, although data were obtained from 17 bases, balanced regional distribution was not possible. Bases and personnel providing data for the Oak Ridge National Laboratory survey are listed in Table A-1. The locations of participating bases are shown in Fig. A-1.

Table A-1. Bases and personnel providing data to the ORNL survey[a]

Air Training Command	
Williams AFB, Arizona	Mr. Mike Toriello and Lt. Gordon Wells
Vance AFB, Oklahoma	Mr. John Lieb
Laughlin AFB, Texas	Mr. Calvin Deese
Lowry AFB, Colorodo	Lt. Ted Nickelsburg
Chanute AFB, Illinois	Mr. Bob Fileccia
Reese AFB, Texas	Mr. George VanSlyke
Strategic Air Command	
Malmstrom AFB, Montana	Mr. Jack Gamble
Plattsburgh AFB, New York	Mr. Tom LaBombard
Barksdale AFB, Louisiana	Ms. Terry Pace
Vandenburg AFB, California	Sgt. Jeffery Murray
Grand Forks AFB, North Dakota	Mr. Hal Miller
Wurtsmith AFB, Michigan	Mr. Paul Rekowski
Ellsworth AFB, South Dakota	Mr. Len Winter
Whiteman AFB, Missouri	Lt. Graham Vesely
Minot AFB, North Dakota	Ms. Lavonne Wohl
Air Force Reserve	
Youngstown Municipal Airport, Ohio	Mr. Charles Marado and Mr. Dennis Pardee
Air Force Systems Command	
Patrick AFB, Florida	Mr. Jack Gibson

[a]ORNL = Oak Ridge National Laboratory, AFB = Air Force Base.

AIR FORCE "ROOF SLOPE STUDY"

1987 BUR MAINTENANCE, REPAIR, AND REPLACEMENT COSTS DATA FORM

1. BASE NAME	2. BUILDING NO.	3. ROOF AREA DESIGNATION (A,B,C,... ; See AF Form 1059)
VANDENBERG (SAC)	1124B	

4. DESCRIPTION OF WORK

DATE	COSTS ($) LABOR	COSTS ($) MAT'LS	MAINTENANCE TYPE	CHARACTER OF[1] ROOF FAILURE		LABOR TYPE
				M		
				F		
				M		
				F		
				M		
				F		
1/1/87	137.00	—	INSPECTION	M	—	IN
				F	—	HOUSE
1/5/87	17.00	10.00	FLASHING REPAIR	M	—	IN
				F	A	HOUSE
3/9/87	TOTAL 71214	COST .00	ROOF REPLACEMENT	M		CONTRACT
				F		
10/24/87	17.00	10.00	MEMBRANE REPAIR	M	4	IN
				F	—	HOUSE

DATE	MAINTENANCE/REPAIR/REPLACEMENT DETAILS (How repaired, extent of replacement, etc.)
1/1/87	INSPECTION
1/5/87	FLASHING REPAIR FROM STORM DAMAGE
3/9/87	NEW ROOF MEMBRANE & FLASHING
10/24/87	PATCH HOLE IN MEMBRANE

5. BASE LABOR CHARGE FOR IN-HOUSE ROOF WORK
Inspection: 17.00 $/man-hr General maintenance: 7.00 $/man-hr

6. ARE ANY 1987 COSTS FOR THIS ROOF AREA OMITTED? ☒ No ☐ Yes If yes, give date of and explain.

[1] (M) MEMBRANE FAILURE TYPE
1 - BLISTERS 2 - SPLITS 3 - ALLIGATORING 4 - HOLES 5 - RIDGES 6 - EXPOSED FELTS
7 - SLIPPAGE O - OTHER (See descriptions in AFM91-36)

(F) FLASHING FAILURE LOCATION
A - ROOF PERIMETER B - PENETRATION C - DRAINS D - EXPANSION JOINT O - OTHER

OAK RIDGE NATIONAL LABORATORY

Fig. A.2. Oak Ridge National Laboratory built-up roof maintenance cost survey form.

obtained from several bases, but they were received in a variety of forms, making much of the roof repair data difficult to compile. Many bases provided data in summary form because of difficulties in obtaining data to complete the cost data forms.

Combining data from other Air Force sources with data received from each base provided repair costs for numerous roofs. These data were combined and analyzed on repair cost per square foot of base BUR area (operational buildings only—no base housing) to determine the appropriate average BUR repair cost for life-cycle costing.

The repair cost data base was then separated into categories to investigate slope effects on repair cost. Once the repair cost data base was separated by membrane type, these samples were further separated by roof slope. Because of the requirements for additional information about each roof (membrane type, slope, and area), many of the roofs for which repair cost data were available could not be used. As a result, sample sizes became too small to allow a relationship between slope and repair cost to be identified.

Internal Distribution

1. R. A. Bradley
2. R. S. Carlsmith
3. P. W. Childs
4. G. E. Courville
5. W. Fulkerson
6. M. A. Karnitz
7. M. A. Kuliasha
8. J. M. MacDonald
9. D. L. McElroy
10. H. McLain
11. W. R. Mixon
12. J. T. Miller
13. D. E. Reichle
14. E. T. Rogers
15. M. W. Rosenthal
16–30. S. D. Samples
31–38. T. R. Sharp
39. R. B. Shelton
40–47. R. L. Wendt
48. T. J. Wilbanks
49. K. E. Wilkes
50. Document Reference Section
51. Central Research Library
52–54. Laboratory Records
55. Laboratory Records (RC)
56. ORNL Patent Office

External Distribution

57. P. R. Achenbach, 1322 Kurtz Road, McLean, VA
58. R. L. Alumbaugh, Code L52 Naval Civil Engineering Laboratory, Port Hueneme, CA
59. R. Andrukonis, 7th & D Streets, SW, Washington, DC
60. C. D. Auburg, Bonneville Power Administration, P.O. Box 3621-EPC, Portland, OR
61. D. Bailey, USACERL, P.O. Box 4005, Champaign, IL
62. R. J. Berg, Veterans Administration, Washington, DC
63. M. Bodett, State Department, Arlington, VA
64. R. Broderick, Criteria and Res BR (PCDR), Washington, DC
65. E. Burger, USAMC Install, & Serv. Act., Rock Island, IL
66. W. Carll, Building Technologies Corporation, Cincinnati, OH
67. P. Cave, NAVFACENGRCOM, Alexandria, VA
68. W. C. Cullen, 11718 Tifton Drve, Potomac, MD
69. J. J. Cuttica, Gas Research Institute, 8600 Bryn Mawr Avenue, Chicago, IL
70. W. B. Dailey, U.S. Department of Energy, Washington, DC
71. D. David, HQ TRADOC, Ft. Monroe, VA
72. LTC de la Garza, U.S. Army, Ft. Sam Houston, TX
73. H. Dhokai, U.S. Department of Agriculture, Washington, DC
74. R. M. Dupuis, Structural Research Incorporated, Middletown, WI
75. M. J. Dvorchak, Mobay Chemical Corporation, Pittsburgh, PA
76. D. Evick, U.S. Postal Service, Washington, DC
77. D. Firman, HQ AFESC, Tyndall AFB, FL
78. S. A. Funk, Celotex Corporation, Tampa, FL
79. J. Galvin, USAMC Install. & Serv. Act., Rock Island, IL
80. R. J. Gillenwater, Carlisle Syntec Systems, Carlisle, PA
81. F. Hancock, U.S. Army Engineer District, Huntsville, AL
82. S. Harris, EG&G, Kennedy Space Center, FL
83. T. Harris, Department of Energy, Oak Ridge, TN

84. E. Humm, Naval Civil Engineering Laboratory, Port Hueneme, CA
85. W. R. Huntley, 12422 Union Road, Knoxville, TN
86–110. J. L. Ius, HQ AFESC, Tyndall AFB, FL
111. B. Jones, Housing and Urban Development, Washington, DC
112. J. P. Kalt, Harvard University, 79 John F. Kennedy Street, Cambridge, MA
113. C. Key, NAVFACENGCOM, Alexandria, VA
114. A. Knehans, USAEHSC, Ft. Belvoir, VA
115. R. Kolodin, HUD — Office of Public Housing, Washington, DC
116. C. Korhonen, USACRREL, Hanover, NH
111. 117. M. Kumar, HQ, FORSCOM, Ft. McPherson, GA
118. D. Larratt, Manville Sales Corporation, Denver, CO
119. J. Leimanis, NAVFRACENGCOM, Alexandria, VA
120. R. F. Lubbert, USAEHSC, Ft. Belvoir, VA
121. J. Manchester, NASA, Office of Facilities, Washington, DC
122. R. Marcy, HQ AFESC, Tyndall AFB, FL
123. J. E. McCorkle, 6720 S. Steele Street, Littleton, CO
124. F. Mehr, USAEHSC, Ft. Belvoir, VA
125. F. Miles, GSA, Capital Improvements Division, Washington, DC
126. D. E. Morrison, Michigan State University, E. Lansing, MI
127. S. Newquist, HQ, SAC/DEMM, Offutt AFC, NE
128. R. L. Perrine, University of California, Los Angeles, CA
129. W. E. Petersen, Dow Chemical USA, Granville, OH
130. D. Portfolio, TREMCO, Cleveland, OH
131. F. J. Powell, 9919 Mayfield Drive, Bethesada, MD
132. W. J. Rossiter, National Bureau of Standards, Gaithersburg, MD
133. R. Seeman, U.S. Army Corps of Engineers, Washington, DC
134. M. Smith, USAEHSC, Ft. Belvoir, VA
135. J. Swihart, Bureau of Reclamation, Denver, CO
136. S. Tagore, U.S. Department of Energy, Washington, DC
137. K. Thompson, Chesdive, Washington Navy Yard, Washington, DC
138. W. Tobiasson, USACRREL, Hanover, NH
139. R. Tucker, USAEHSC, Ft. Belvoir, VA
140. T. Wallace, NAVFACENGCOM, Philadelphia, PA
141. J. R. Wells, Owens-Corning Fiberlas, Granville, OH
142–241. Headquarters, AFESC/DEMM, Tyndall Air Force Base, FL
242–377. Given Distribution as requested by the Air Force on standard AF177-84 and AF231-84.
378. Office, Assistant Manager, Energy Research and Development, DOE/ORO, Oak Ridge, TN
379–388. Office of Scientific and Technical Information Center, U.S. Department of Energy, Oak Ridge, TN