33.

ORNL
MASTER COPY
220

ORNL-3633
UC-23 – Isotopes – Industrial Technology
TID-4500 (30th ed.)

ORNL RADIOISOTOPES PROCEDURES MANUAL

OAK RIDGE NATIONAL LABORATORY
operated by
UNION CARBIDE CORPORATION
for the
U.S. ATOMIC ENERGY COMMISSION

Printed in USA. Price $3.00. Available from the
Office of Technical Services
U. S. Department of Commerce
Washington 25, D. C.

LEGAL NOTICE

This report was prepared as an account of Government sponsored work. Neither the United States, nor the Commission, nor any person acting on behalf of the Commission:

A. Makes any warranty or representation, expressed or implied, with respect to the accuracy, completeness, or usefulness of the information contained in this report, or that the use of any information, apparatus, method, or process disclosed in this report may not infringe privately owned rights; or

B. Assumes any liabilities with respect to the use of, or for damages resulting from the use of any information, apparatus, method, or process disclosed in this report.

As used in the above, "person acting on behalf of the Commission" includes any employee or contractor of the Commission, or employee of such contractor, to the extent that such employee or contractor of the Commission, or employee of such contractor prepares, disseminates, or provides access to, any information pursuant to his employment or contract with the Commission, or his employment with such contractor.

ORNL-3633

Contract No. W-7405-eng-26

ISOTOPES DEVELOPMENT CENTER

ORNL RADIOISOTOPES PROCEDURES MANUAL

Coordinated by

F. N. Case

Compiled by

D. A. Fuccillo, Jr. Sylvia B. Ewing

Contributions by

E. H. Acree
C. E. McFarland
B. J. Massey
P. B. Orr
R. S. Pressly
S. J. Rimshaw
H. T. Russell

JUNE 1964

OAK RIDGE NATIONAL LABORATORY
Oak Ridge, Tennessee
operated by
UNION CARBIDE CORPORATION
for the
U. S. ATOMIC ENERGY COMMISSION

Contents

I. INTRODUCTION 1

II. PRODUCTION AND PROCESSING OF RADIOISOTOPES 3

Production of Radioisotopes 3

Target Materials 5

Effect of Contaminants in the Target 5

Reagent-Grade Chemicals as Targets 5

Enriched Isotopes as Targets 6

Target Encapsulation for Irradiation 6

Unit Processes for Radioisotopes 6

Precipitation Processes 8

Chromatographic Processes 9

Solvent Extraction 10

Distillation and Volatility 10

Bibliography 10

III. SPECIFIC PROCEDURES FOR PROCESSING RADIOISOTOPES 11

Removal of Sample from Aluminum Irradiation Capsules 12

Antimony-122 13

Antimony-124 15

Antimony-125 16

Argon-37 19

Arsenic-76 21

Arsenic-77 22

Barium-131 23

Barium-133 24

Barium-140–Lanthanum-140; Strontium-89 and -90 25

Bismuth-210 (RaE) 29

Bromine-82 31

Cadmium-109 33

Cadmium-115*m* 34

Cadmium-115 35

Calcium-45 37

Calcium-47–Scandium-47 39

Carbon-14 41

Cesium-134 45

Chlorine-36 47

Chromium-51 49

Cobalt-58 51

Cobalt-60 53

Copper-64 55
Europium-152 and -154 57
Fission Products 59
Gallium-72 61
Gold-198 63
Gold-199 64
Hafnium-181 67
Hydrogen-3 69
Indium-114*m* and -114 71
Iodine-125 73
Iodine-129 75
Iodine-130 77
Iodine-131 78
Iridium-192 81
Iridium-194 82
Iron-55 and -59 83
Iron-55 85
Iron-59 87
Krypton-85 89
Lanthanum-140 93
Mercury-197m_2 and -197 95
Mercury-203 96
Molybdenum-99 97
Neodymium-147–Promethium-147 99
Nickel-63 103
Niobium-95 105
Osmium-191 107
Palladium-109 109
Phosphorus-32 111
Potassium-42 113
Praseodymium-142 115
Promethium-147 117
Rhenium-186 117
Rubidium-86 119
Ruthenium-97 121
Ruthenium-103 122
Ruthenium-106–Rhodium-106 124
Samarium-153 125
Scandium-46 127

Selenium-75 129
Silver-110 and -110*m* 131
Silver-111 132
Sodium-24 135
Strontium-85 137
Strontium-90–Yttrium-90 138
Sulfur-35 (as H_2SO_4) 141
Sulfur-35 [as BaS in $Ba(OH)_2$] 143
Sulfur-35 (as Elemental Sulfur in Benzene) 145
Tantalum-182 147
Thallium-204 149
Thulium-170 151
Tin-113 153
Tungsten-185 155
Tungsten-187 156
Xenon-133 157
Yttrium-90 161
Yttrium-91, Promethium-147, Neodymium-147, Praseodymium-143, and Cerium-141 and -144 162
Zinc-65 165
Zirconium-95–Niobium-95 167

IV. STORAGE AND SHIPMENT OF RADIOISOTOPES 169
Description of Area 170
Inventory 170
Preparing a Shipment 174
Methods of Shipment 175
Containers 175
Radiation from Packaged Radioisotopes 180

APPENDIX A. FACILITIES FOR PRODUCTION AND PROCESSING OF RADIOISOTOPES 183
Description of ORR 183
ORR Irradiation Facilities 183
Processing Facilities 183
Hot Cells 186
Glove Boxes and Hot Hoods 189
Removal of Radioactive Waste 189
Radiation Safety in the Isotopes Area 190
Detection of Radiation 191
Containment 191
Exposure Limits 192

APPENDIX B. ASSAY METHODS USED IN THE ORNL RADIOISOTOPE PROGRAM 193
Calibration and Routine Measurement 194
Bibliography 199

APPENDIX C. CALCULATION OF THE SPECIFIC ACTIVITY OF RADIOISOTOPES PRODUCED BY NEUTRON CAPTURE 201

APPENDIX D. BIBLIOGRAPHY 207

I. Introduction

In June 1946 a significant article in the magazine *Science* announced the availability of radioisotopes from Oak Ridge. The first shipment of reactor-produced isotopes, a few millicuries of ^{14}C, was sent to Barnard Free Skin and Cancer Hospital for cancer research in August 1946. Since then, a total of 2.4 million curies of more than 100 different radioisotope preparations has been shipped from Oak Ridge National Laboratory (ORNL) for world-wide use in industry, medicine, and agriculture.

The first large reactor ever built (so-called X-10 Graphite Reactor) was used to produce the first small amounts of radioisotopes. This reactor, for 20 years a work-horse in the radioisotope program, was retired from service in November 1963, and irradiations are now accomplished in the more-refined, higher-flux Oak Ridge Research Reactor (ORR) and Low Intensity Test Reactor (LITR).

The production of radioisotopes involves several different operations, including the essential reactor irradiation (Fig. I-1):

1. target selection and preparation;
2. reactor irradiation;
3. chemical processing of the irradiated targets to obtain a specified purity;
4. assay and storage;
5. packaging for shipment.

Supporting operations include analyses of the in-process material, radiation surveys, and disposal of contaminated waste.

The primary objective of this manual is to present the detailed procedures used at ORNL in the chemical processing of neutron-produced and short-lived fission product radioisotopes. It is not intended to represent these procedures necessarily as the latest technology nor as the preferred choice for every processing location; many factors, too complex for this discussion, affect the choice of a chemical separation process and include such considerations as existing equipment or available waste disposal services.

The format of the manual in general follows the production sequence. Section II describes target selection, target preparation, reactor irradiation principles, and processing principles. Section III contains detailed procedures for each radioisotope, and Section IV describes the storage and shipping operations. Descriptions of the Oak Ridge Research Reactor and the chemical processing facilities, tabulated reactor production data for each isotope product, analytical techniques, and bibliography are contained in Appendices A to D.

UNCLASSIFIED
ORNL-DWG 64-3849

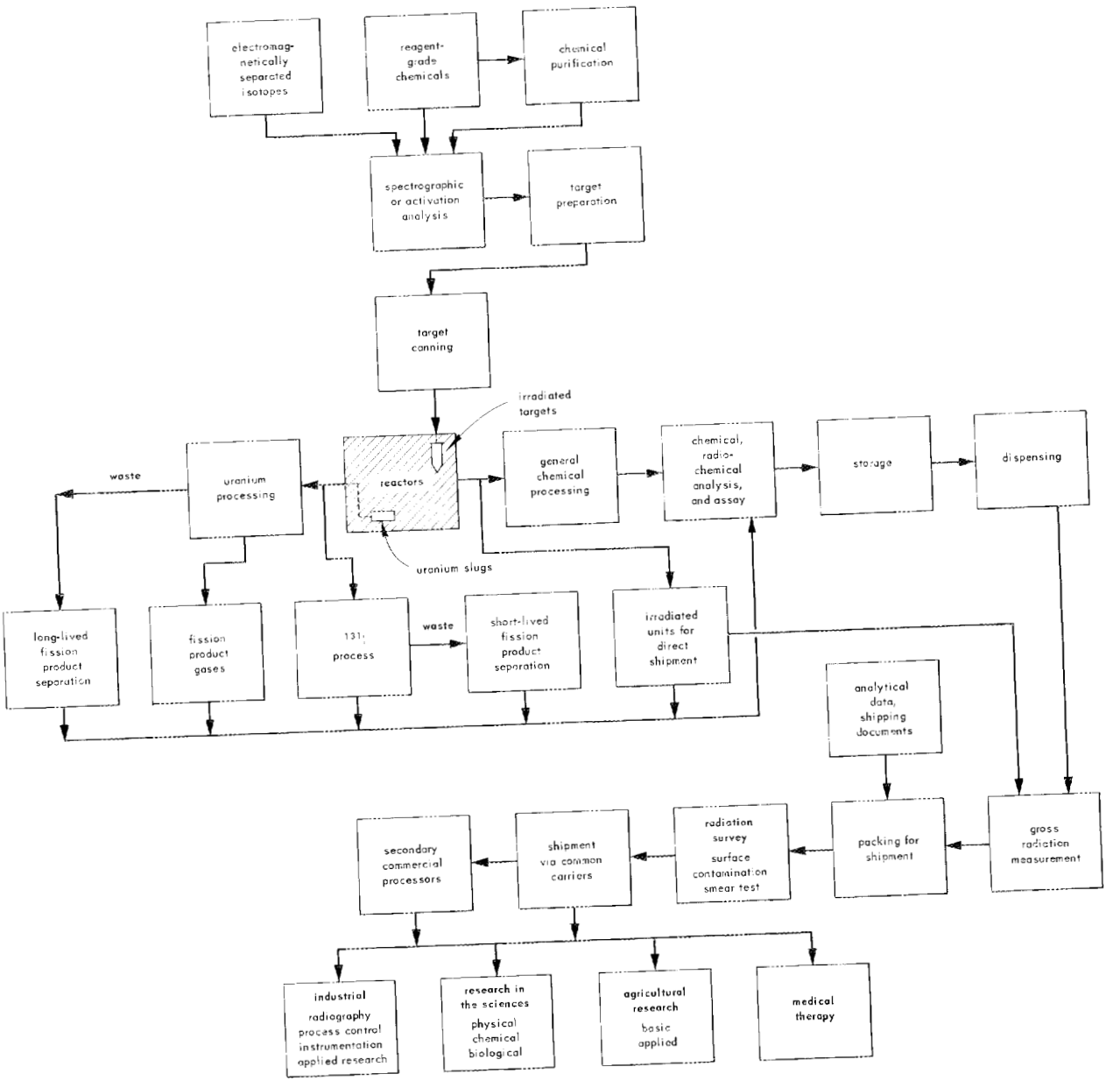

Fig. 1-1. Radioisotope Production Operations at ORNL.

II. Production and Processing of Radioisotopes

The majority of radioisotopes used in commerce, education, research, and medicine are obtained from nuclear reactors, either by bombarding target elements with neutrons or by recovering the fission products of ^{235}U. Chemical processing of the radioisotopes is generally necessary to produce a desirable chemical form which meets or exceeds specific standards of radiochemical and chemical purity.

This section describes the basic principles of nuclear processes, selection of target for reactor irradiation, and radiochemical processing, which are the three most important factors in achieving the desired purity in radioisotope preparation. The purpose of this section is to assist the reader to better understand the detailed isotope processing procedures given in Sect. III, and hence emphasizes ORNL products and techniques.

PRODUCTION OF RADIOISOTOPES

During the 38 years following the discovery of radioactivity by Becquerel in 1896, nuclear transformation produced by α-particle bombardment was discovered by Rutherford (1919), and artificial radioactivity produced by the bombardment of boron, aluminum, and manganese with α particles was discovered by Curie and Joliot (1934). During the next 30 years, the number of known elements increased to more than 100. Of the naturally occurring isotopes[1] of these elements, roughly 280 are stable nuclei, and about 25 may be considered naturally radioactive. The number of artificially produced isotopes reached 200 in 1937, ~450 in 1944, ~650 in 1949, ~1000 in 1954, and over 1500 in 1964. Each element in the periodic table has at least one radioactive isotope, and some have as many as 30. The half-lives are as short as 0.3×10^{-6} sec (^{212}Po) and as long as 10^{17} years (^{204}Pb). For practical utilization of these radioisotopes, those having half-lives of a few hours to a few years are of prime importance. In some isolated cases, radioisotopes with half-lives of many hundreds or thousands of years may be useful (e.g., 3×10^5-year ^{36}Cl).

The production of a radioactive nuclide and its subsequent characteristic decay and radiation properties are, in the naive sense, simple processes. Radioactive isotopes can be produced by disturbing a preferred neutron-proton ratio of the element. This is done (1) by adding or removing neutrons, (2) by adding or removing charged particles such as protons, or by a combination of both (1) and (2). In general, a reactor is used for the source of neutrons; a cyclotron or accelerator is used as the source of charged particles. The radionuclides formed by increasing the neutron/proton ratio generally decay (or transform) back to a stable condition by having a neutron transform to a proton, with the emission of a negative beta particle (β^-) and a neutrino – an almost undetectable particle of zero charge and mass ≈ 0:

$$ {}_0^1n \longrightarrow {}_1^1p + \beta^- + \nu \, . $$

For those radionuclides resulting from an increase in the proton/neutron ratio, the decay (or transformation) again tends to reverse the cause for instability, and a proton in the nucleus will be transformed into a neutron, with the emission of a positive beta particle (positron) β^+:

$$ {}_1^1p \longrightarrow {}_0^1n + \beta^+ + \nu \, . $$

In some cases, nuclei which are unstable because of an excess of protons (called neutron-deficient nuclei) will regain stability by capturing an orbital electron (ϵ):

$$ {}_1^1p + {}_1e^- \longrightarrow {}_0^1n + \nu \, . $$

[1] Isotopes are defined as atoms of an element differing only in the number of neutrons (i.e., atoms with the same atomic number Z but varying in mass number A).

As a result of this process, characteristic x rays will be emitted during the refilling of the orbital electron shells.

In the transformation processes described above, gamma radiation (γ) may or may not be emitted. These gamma rays, or photons, may undergo internal conversion whereby the transition between the two energy states of a nucleus is not evidenced by the emission of a photon. Instead the energy is imparted to an orbital electron, which is ejected from the atom.

For some nuclei, only gamma radiation is emitted for the de-excitation from a metastable or isomeric state. Such decay is termed isomeric transition (IT) and is characterized by no change in mass number or atomic number.

Many radioactive nuclides decay by two or more modes, so that β^-, β^+, γ, ϵ transformations with associated γ emission and x radiation are not uncommon (see App. B, Table B-1). The branching ratio defines relatively each mode of decay.

For heavy nuclei, the transformation to a more stable configuration may take place by the emission of an alpha particle (α or ${}^4_2$He). Naturally radioactive nuclides of $Z > 82$ generally decay by α emission. Again gamma emission may also occur:

$$ {}^A_Z X \rightarrow \alpha + {}^{A-4}_{Z-2} Y \ . $$

For each of the nuclear transformations, or decays, described above, the products (daughter nuclides) may or may not be radioactive.

The bulk of artificial radioactive isotopes are produced in nuclear reactors. The following modes or processes, each given with a typical example, describe the nuclear reactions:

1. (n,γ) Process – ${}^{23}_{11}\mathrm{Na}(n,\gamma){}^{24}_{11}\mathrm{Na}$
   Neutrons in thermal equilibrium with the moderator have an energy of $\sim$0.04 ev. Fluxes of $\sim$1–4 ($\times 10^{14}$) neutrons cm^{-2} sec^{-1} are commonly available. Approximately two-thirds of the nuclides for which the chemical procedures are given in Sect. III are produced by the (n,γ) process. The product isotope will be of the same element as the target; hence it will not be carrier free unless a special technique is used. Its specific activity (activity per unit weight) is limited. The (n,γ) reactions are tabulated in App. C; a computer program was used to calculate the expected yield as a function of the flux and irradiation time. The calculations take into account secondary reactions such as burnup of the target, burnup of the product, and decay of the product during irradiation. Activation cross sections vary from several millibarns to several thousand barns (1 barn = 10^{-24} cm^2).

2. (n,p) Process – ${}^{58}_{28}\mathrm{Ni}(n,p){}^{58}_{27}\mathrm{Co}$
   Fast neutrons of the Mev range are required in general, for this process.[2] Modern reactors having fast fluxes at $\sim$3 Mev of $\sim 1 \times 10^{14}$ neutrons cm^{-2} sec^{-1} are readily available. Since the product nucleus is of a different species, the specific activity is more or less dependent on the purity of the sample. Such considerations as producing a stable species of the product nucleus are, at times, important (e.g., in production of ^{128}Xe from ^{127}I or ^{130}Xe from ^{129}I). The effective activation cross sections are of the order of millibarns.

3. (n,α) Process – ${}^{6}_{3}\mathrm{Li}(n,\alpha){}^{3}_{1}\mathrm{H}$
   The emission of a charged particle in the reaction offers a product nucleus which is also carrier free.

4. (n,γ) Process Followed by β^- Decay

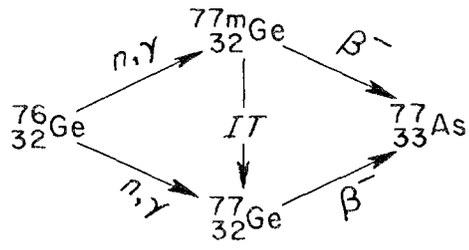

   The method has wide applications for producing carrier-free radionuclides.

5. Fission (f) Process – ${}^{235}_{92}\mathrm{U}(n,f)$ Variety of Isotopes
   The ${}^{235}_{92}$U nucleus, upon capture of a thermal neutron, will fission. This produces a wide variety of stable nuclides and radionuclides because of the asymmetric distribution of the fission fragment masses. The peak yields of

[2] Few exceptions are found among reactions with the light nuclei in cases where the binding energy of a proton or α particle is appreciably lower than that of a neutron: the reactions ${}^{10}\mathrm{B}(n,p){}^{10}\mathrm{Be}$, ${}^{14}\mathrm{N}(n,p){}^{14}\mathrm{C}$, ${}^{35}\mathrm{Cl}(n,p){}^{35}\mathrm{S}$, ${}^{10}\mathrm{B}(n,\alpha){}^{7}\mathrm{Li}$, and ${}^{6}\mathrm{Li}(n,\alpha){}^{3}\mathrm{H}$ occur with thermal neutrons.

~6% are masses from 90–100 and 135–140. Specific activities of these products will vary from one isotope to the next since stable nuclei are also formed by the fission process. Since the ratio of the number of neutrons to the number of protons increases with atomic number, the fission products formed are neutron-excess nuclei that undergo successive β^- decays. Hence, one could speak of still other modes involving fission and single or multiple β^- decay.

The chemistry of separation of these products is subject to the handicaps of radiation hazards as well as the drawbacks inherent in complex systems, and a considerable amount of time elapses before a product is obtained; thus, in general, only relatively long-lived radioisotopes are obtained in this fashion. A further handicap is the fact that in many cases more than one radioactive isotope of a given element is present, with a resulting decrease in isotopic purity. These factors are discussed more fully in a succeeding subsection.

The growth of activity can be approximated using the equation:

$$A = N\Phi\sigma(1 - e^{-\lambda t}) ,$$

where

A = activity or yield (dis/sec),

N = number of target atoms,

Φ = flux (neutrons cm^{-2} sec^{-1}),

σ = effective activation cross section, barns (10^{-24} cm^2),

λ = decay constant ($0.693/T_{1/2}$).

No corrections are made here for radioactive daughter products and burnup of target and product. For a more exact solution, the reader is referred to App. C.

TARGET MATERIALS

A suitable target element or compound for radioisotope production is chosen partially for its stability to both heat and reactor irradiation conditions. It should also be chemically pure and contain a high percentage of the target isotope. Metallic forms of such elements as silver, palladium, cadmium, iridium, copper, platinum, and gold make good target materials. Oxides such as Fe_2O_3 and MoO_3 are useful as target compounds because of their stability and freedom from induced activities in the combined oxygen. Some carbonates such as $BaCO_3$, $CaCO_3$, and Rb_2CO_3 are also acceptable target materials in a number of cases. Other compounds such as chlorides, phosphates, and sulfates are usually avoided because they yield undesirable radioactivities such as ^{35}S, ^{36}Cl, and ^{32}P when irradiated unless, of course, multiple isotope production is desired. Nitrates and organic compounds may decompose and produce pressure inside the sealed target ampule and are not normally used as target materials.

Effect of Contaminants in the Target. – Contaminants in reactor target materials are generally detrimental to the production of radioisotopes for two reasons: (1) extraneous radioisotopes may be produced, thereby complicating the subsequent chemical processing; and (2) since very high-specific-activity radioactive isotopes of a dissimilar chemical element result from the $(n,\gamma \xrightarrow{\beta^-})$, (n,p), and (n,α) reactions, any product element must be rigorously excluded from the target to avoid reducing the specific activity.

Contaminants that have a high capture cross section are particularly troublesome. For example, a trace amount of cobalt impurity in the reagent-grade iron used for ^{59}Fe production forms significant amounts of ^{60}Co by the $^{59}Co(n,\gamma)^{60}Co$ reaction. If cobalt impurity is present, it can be separated from the iron either before or after the reactor irradiation.

The presence of ^{198}Au contamination in a carrier-free ^{199}Au radioisotope product of the

$$^{198}Pt(n,\gamma)^{199}Pt \xrightarrow[31m]{\beta^-} {}^{199}Au$$

reaction is undesirable for a number of medical applications because the energy of γ rays from ^{198}Au is higher than the energy of the γ rays associated with ^{199}Au. The ^{198}Au contaminant results from the $^{197}Au(n,\gamma)^{198}Au$ reaction on trace quantities of gold often found in platinum. In this case, the contaminant and desired product are isotopes of the same element, and any impurities in the target element (platinum) must be removed before the irradiation.

Reagent-Grade Chemicals as Targets. – The radiochemical purity of a radioisotope should exceed 99% if possible. This specification can

requently be met by irradiating inexpensive, eadily obtained reagent-grade chemicals. The ollowing radioisotopes can be prepared by irraliating reagent-grade target material (the chemical orm of the target is given in parentheses after the adioisotope):

^{24}Na (Na_2CO_3)	^{115}Cd (element)
^{60}Co (element)	^{124}Sb (element)
^{72}Ga (Ga_2O_3)	^{153}Sm (Sm_2O_3)
^{86}Rb (Rb_2CO_3)	^{198}Au (element)
^{110m,110}Ag (element)	^{46}Sc (Sc_2O_3)
^{122}Sb (element)	^{65}Zn (element)
^{142}Pr (Pr_2O_3)	^{75}Se (element)
^{186}Re (element)	^{109}Pd (element)
^{210}Bi (element)	^{115m}Cd (element)
^{42}K (K_2CO_3)	^{140}La (La_2O_3)
^{64}Cu (element)	^{187}W (WO_3)
^{76}As (As_2O_3)	$^{197m}{}^{2}$Hg (HgO)
^{99}Mo (MoO_3)	

It is generally advisable to perform a test irradiation (activation analysis) on any potential target materials prior to irradiation for production, since different lots may show a surprising variation in trace element content.

Enriched Isotopes as Targets. – Perhaps the most obvious advantage of using an enriched-isotope target over a natural-abundance target for reactor irradiation is that the concentration of target atoms in the irradiated material can be increased (by orders of magnitude in ^{46}Ca, e.g.), with a consequent increase in the specific activity of the desired radioisotope. Another advantage is that undesirable radioisotopes produced by other isotopes of the natural element can usually be eliminated or greatly decreased by a decrease in the amount of the offending nuclide. For example, irradiation of a normal iron target gives a mixture of activities containing about 20% ^{59}Fe and 80% ^{55}Fe. On the other hand, enriched-isotope targets of ^{54}Fe and ^{58}Fe permit ^{55}Fe or ^{59}Fe preparations with radiochemical purities of >99%.

A long-lived radioisotope recovered from fission isotopes can also be used as a target material to produce other radioisotopes. For example, the weak γ emitter ^{129}I ($T_{1/2} = 1.56 \times 10^7$ years) is encapsulated and irradiated to produce ^{130}I ($T_{1/2}$ = 12.5 hr). Similarly ^{147}Pm ($T_{1/2}$ = 2.6 years) yields ^{148}Pm ($T_{1/2}$ = 54 days) by the (n,γ) reaction.

Target Encapsulation for Irradiation. – At ORNL, target materials for reactor irradiations are sealed in standard 2S high-purity aluminum capsules (see Fig. II-1) by heliarc welding. Although it is an optional procedure, the target material is usually first sealed in a quartz ampule to facilitate the quantitative handling of small amounts of the target.

Encapsulation materials with an excessively high neutron-capture cross section are avoided. For example, targets should not be encapsulated in a borosilicate glass since the high boron neutron-capture cross section [3840 barns for the $^{10}B(n,\alpha)^7Li$ reaction] significantly decreases the neutron flux available to the target atoms.

UNIT PROCESSES FOR RADIOISOTOPES

The separation and purification of radioisotopes require the use of many standard unit processes. In fact, several unit processes were established as powerful separations tools to fulfill radioisotope processing needs; the separations of metallic ions by solvent extraction, ion exchange, and gas chromatography are examples. The need for such a variety of processing techniques results from several factors:

1. wide variation in chemical characteristics of the various radioisotopes;
2. high-purity requirements;
3. need for processes adapted to remote operation;
4. low concentration of the product isotope in the material to be processed;
5. effect of ionizing radiations on reagents during the process chemistry.

The separation of radiochemical species differs from the separation of ordinary compounds only in that unusually small quantities are encountered, and at sufficiently high levels of ionizing radiation, chemical reagents are damaged and unwanted reagents are generated. The separation of any two (or more) chemical species is possible because

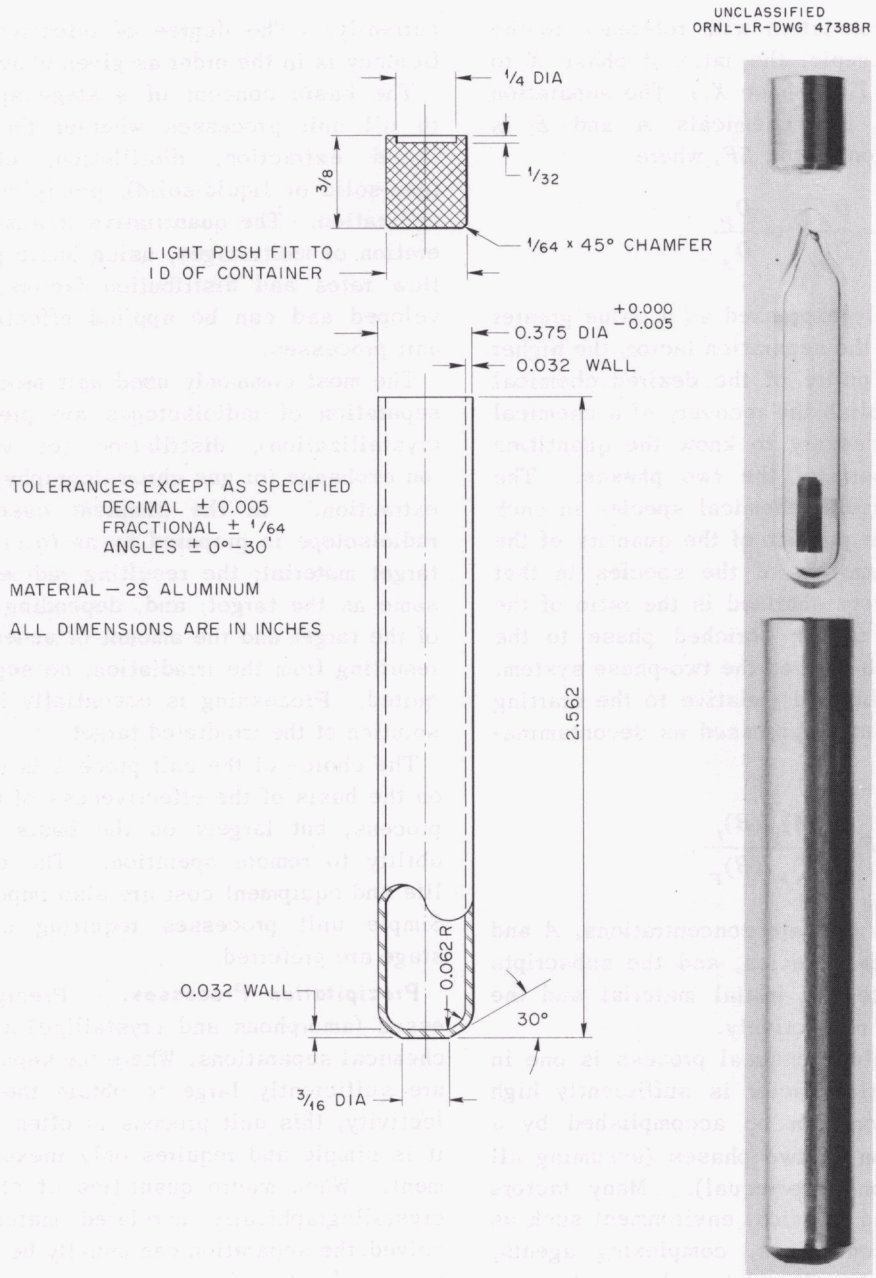

Fig. II-1. ORR Irradiation Can and Cap.

of differences in their physicochemical properties. Separation is always effected by subjecting the two species to a chemical or physical environment that always permits preferential distribution between two phases. These phases may be solid-liquid, liquid-liquid, solid-gas, or liquid-gas. The phases may be the materials to be separated or they may be inert carriers of the materials. When equilibrium (or steady state) is established between the phases, they are physically separated, thus effecting a degree of separation of the chemical species.

At steady state, the ratio of the concentrations of a chemical species, A, in the two phases is generally referred to as the distribution factor, or coefficient, and is written D_A. (All distribution

factors must be consistent with reference to the phases in, for example, the ratio of phase X to phase Y or phase Y to phase X.) The separation obtained between two chemicals A and B is called the separation factor, SF, where

$$SF = \frac{D_A}{D_B} \text{ or } \frac{D_B}{D_A} .$$

The ratio is usually expressed as a value greater than 1. The larger the separation factor, the higher the recovery and purity of the desired chemical species. To establish the recovery of a chemical species, it is necessary to know the quantities (volumes or masses) of the two phases. The quantity of a particular chemical species in each phase, then, is the product of the quantity of the phase and concentration of the species in that phase. The recovery obtained is the ratio of the desired chemical in the enriched phase to the total quantity which entered the two-phase system. The purification obtained (relative to the starting material) is frequently expressed as decontamination factor DF:

$$DF = \frac{(A)_I/(B)_I}{(A)_F/(B)_F},$$

where parentheses indicate concentrations, A and B are two chemical species, and the subscripts I and F designate the initial material and the separated material respectively.

The most desirable chemical process is one in which the separation factor is sufficiently high that the separation can be accomplished by a single equilibration of two phases (assuming all other considerations are equal). Many factors in the physical and chemical environment such as temperature, concentrations, complexing agents, and pressure may be altered to enhance the separation factor.

In cases where the separation factor obtained in a single equilibration of two phases (a stage) is not sufficient to obtain the desired purity and recovery, the separation step is repeated a number of times. The degree of separation obtained by the use of a number of such equilibrations (stages) depends strongly on the flow pattern of the phases among the several stages in use. The transfers of the phases may be either continuous or batchwise. In general, the stages are combined countercurrently, chromatographically, differentially, or cocurrently. The degree of effectiveness and efficiency is in the order as given above.

The basic concept of *a stage* applies equally to all unit processes whether they are liquid-liquid extraction, distillation, chromatography (gas-solid or liquid-solid), precipitation, or crystallization. The quantitative treatment of the operation of multistages, using basic parameters as flow rates and distribution factors, is well developed and can be applied effectively to most unit processes.

The most commonly used unit processes for the separation of radioisotopes are precipitation (or crystallization), distillation (or volatilization), ion exchange (or gas chromatography), and solvent extraction. In the simplest case the desired radioisotope is prepared by an (n,γ) reaction on a target material; the resulting radioelement is the same as the target; and, depending on the purity of the target and the amount of undesired products resulting from the irradiation, no separation is required. Processing is essentially limited to dissolution of the irradiated target.

The choice of the unit process is made partially on the basis of the effectiveness of the separation process, but largely on the basis of its adaptability to remote operation. The expected use-life and equipment cost are also important factors. Simple unit processes requiring only a single stage are preferred.

Precipitation Processes. – Precipitation processes (amorphous and crystalline) are common in chemical separations. Where the separation factors are sufficiently large to obtain the required selectivity, this unit process is often used because it is simple and requires only inexpensive equipment. When macro quantities of chemically and crystallographically unrelated materials are involved, the separation can usually be accomplished in a single step.

The effectiveness of the method can frequently be enhanced by the use of changes in valence state, homogeneous precipitations, isomorphous co-crystallization and "carrying." A change in valence, such as in the oxidation of Ce^{3+} to Ce^{4+}, can result in a comparatively simple separation of cerium from the other rare earths; cerium in the trivalent state would otherwise be extremely difficult to separate from the trivalent rare earths. Homogeneous precipitations can give high separation factors and at the same time improve the filtration properties of the precipitate. Isomorphous

co-crystallization is effective when the crystallographic structures of the precipitated materials are similar. In isomorphous co-crystallization, the distribution factors are either constant (single stage) or logarithmic (differential stage). "Carrier" precipitations are useful when the concentration of the radiochemical is below the limit of solubility. The mechanism of "carrying" may in many cases result from adsorption of the isotope on the surface of the solid phase.

A particular advantage of the precipitation method is the relative insensitivity to high-level radiation. Excess reagent can be added to compensate for any radiation damage.

The use of several precipitation steps (stages) is generally made cocurrently. That is, successive precipitations are generally made in such a way that the intrastage flow is cocurrent. However, in some cases where a high selectivity is exhibited, the use of a few stages arranged in a batchwise (pseudo) countercurrent fashion is desirable. Processes using more than three stages are usually difficult to employ owing to the large number of vessels and phase contactings required.

Chromatographic Processes. – Chromatographic processes are multistage operations in which a solid phase (except in liquid-liquid chromatography) remains fixed within the stage and the other phase (gas or liquid) moves continuously through each stage. Ion exchange and gas chromatography are two chromatographic processes most used in radiochemical separations. Chromatographic processes where both phases are liquids (solvent extraction) are rarely used since the more powerful countercurrent method is just as easy to use.

Chromatographic processes are best suited to separation of radiochemicals when the level of operation is at micro or low macro scale. Although they are less effective per stage than continuous countercurrent processes, they possess an inherent advantage in being able to perform difficult separations because of the enormous number of stages that can be obtained in a relatively compact, simple, packed column when using elution development. Elution chromatography, however, has several inherent limitations: (1) nonlinearity of the distribution factors, (2) low total loading capacity, and (3) slow kinetics owing to diffusion through a solid phase. A large change in the distribution factor of an ion between the liquid and solid phase as a result of changes in the concentration of the species in the liquid phase is referred to as nonlinearity. The movement of a sorption band through a chromatographic column necessarily results in a change of concentration – from the value at the peak of the band to near zero at the front and rear of the band. As a consequence of this change, nonlinear distribution factors will result in a slowing of the band movement at either end. Under these conditions the band will exhibit a steep front and a tail extending up the column. Such a condition always exists to a degree and thus limits the separation that can be obtained regardless of the number of stages used. If only a small fraction of the loading capacity of the solid phase is used, the resulting nonlinearity is much less. Elution chromatography is at its best when used at micro-chemistry levels. However, when a micro constituent precedes a macro constituent through the column, the separation may be sharply limited. The relatively low loading capacity (in moles per gram of exchanger), in combination with the use of a small fraction of that capacity to reduce the effect of nonlinearity, severely limits the throughput of an elution chromatographic process. Furthermore, if high loading and fast flow rates are used, the number of effective stages will decrease rapidly.

In addition to elution development, two additional chromatographic techniques are used: displacement development and frontal analysis. Displacement development, when suitable partitioning and displacement agents are used, can aid in eliminating the tailing effect due to nonlinearity. The fraction of the loading capacity that can be utilized is also greater than in chromatography. The frontal analysis procedure is generally used as a concentration step, which at the same time can provide some degree of separation.

Ion-exchange processes make use of a wide variety of organic and inorganic exchangers which, when employed in combination with a variety of eluting (complexing) agents, provide a broad capability for the separation of both cationic and anionic species. However, the use of organic ion exchangers at high radiation levels presents problems of radiation damage to the resin and gassing of the liquid phase.

Gas chromatographic processes for radioisotopes use almost exclusively a solid phase such as activated carbon or molecular sieves, both at low temperature. Although the mechanism of partition in ion exchange is entirely different from that in

gas chromatography, the basic theory, the techniques, and the inherent advantages and limitations of the method apply equally to both cases.

Solvent Extraction. – Solvent extraction processes may be either single- or multistage depending on the desired purity and recovery, and the separation factor between the two chemical species that are to be separated. Multistage processes may be operated either batchwise or continuously, but batch solvent extraction is usually limited to the equivalent of two or three stages because of the large number of vessels and manipulations that are required. Operation of a multistage solvent extraction process may be cocurrent, differential, or countercurrent.

A wide variety of extractants of high selectivity and high capacity makes solvent extraction a useful process, particularly when large quantities of product are required. The stage efficiency obtained in proper equipment can be nearly theoretical and, because of the relative ease in moving of the phases, the most effective means of operation of the stages (continuous countercurrent) can be employed. In addition, equilibrium is reached rapidly enough to allow very high flow rates. Radiation effects are not ordinarily a problem except at the very high radiation levels. Solvent extraction is well suited for remote operation.

One of the most critical factors in multistage, continuous countercurrent, solvent-extraction operation is the high cost of the equipment – due in part to the cost of controls and instrumentation. Reductions in production level result in only relatively small reductions in cost. The cost of equipment for batch or differential extraction is relatively low. For these reasons the use of solvent extraction processes involving more than a few stages has been limited to applications where high product levels and long equipment life are required. However, because of the versatility and selectivity of solvent extraction, a single batch stage can accomplish many useful separations.

Distillation and Volatility. – Distillation and volatility processes for radioisotope production are almost always single stage. In the present context, distillation is considered as the separation of two liquids by the formation of a vapor phase that is then condensed in equilibrium with the vapor. The separation factor is the ratio of the vapor pressures of the two liquids. The distillation stage is the normal differential stage obtained by the evaporation of a liquid mixture until the required component has been reduced to a given level. Continuous countercurrent, multistage distillation is seldom employed.

Volatility processes are those in which a gas is separated from a liquid or solid where the liquid or solid has an insignificant vapor pressure as compared to the gas. Generally, the gas is generated at the time of the separation. In such cases the separation factor is enormous, with the separation being limited only by the physical disengagement of the two phases. Volatility, when it can be applied, is a highly effective and inexpensive method of separation.

BIBLIOGRAPHY

Alders, L., *Liquid-Liquid Extraction,* 2d Ed., Elsevier Publication Co., Amsterdam, N.Y., 1959.

Benedict, M., and T. H. Pigford, *Nuclear Chemical Engineering,* McGraw-Hill, New York, 1957.

Brunauer, S., *The Adsorption of Gases and Vapors,* Princeton University Press, Princeton, N.J., 1943.

Dushman, S., *Vacuum Technique,* Wiley, New York, 1955.

Evans, R. D., *The Atomic Nucleus,* McGraw-Hill, New York, 1955.

Friedlander, G., and J. W. Kennedy, *Nuclear and Radiochemistry,* Wiley, New York, 1957.

Gordon, Louis, M. L. Salutsky, and H. H. Willard, *Precipitation from Homogeneous Solution,* Wiley, New York, 1959.

Helfferich, F., *Ion Exchange,* McGraw-Hill, New York, 1962.

Phillips, C., *Gas Chromatography,* Academic Press, New York, 1956.

Ruhemann, M., *The Separation of Gases,* Clarendon, Oxford, 1940.

Treybal, R. E., *Liquid Extraction,* McGraw-Hill, New York, 1951.

III. Specific Procedures for Processing Radioisotopes

Detailed procedures used in processing isotopes at ORNL are given in this section. Targets used, yields, and isotope characteristics[1] are listed in addition to step-by-step procedures for obtaining the radioisotope.

Production yields are based on reactor experience. They reflect "downtime" of the reactor, flux depression from adjoining samples, and other inherent variables. In addition, decay losses that occur between the time of discharge of the sample from a reactor and chemical processing are included in the yield data; thus these are practical rather than theoretical values. Theoretical yields are given in Appendix C along with the method of calculation.

It is recognized that variations in individual operations are difficult to describe; the two-column format is an attempt to solve this problem. Discrete process steps are stated in the left column, and discussions, interpretations, or warnings are listed opposite each step in the right column.

The shielding indicated in each procedure for reduction of the radiation to a safe value is that amount usually found necessary by our experience for the quantities of radioactivity present. This value should be used only as a guide in specifying shielding for individual cases, and standard texts should be consulted for specific applications.

The half-life value and radiations listed in the procedures are generally taken from the *ORNL Catalog of Radio and Stable Isotopes*, 1963, and the cross-section values from the *Chart of the Nuclides*.[2]

---

[1]Because there are often numerous values for radiations from isotopes, only representative values are given in the introduction to each procedure. The values chosen usually include the lowest and highest beta and gamma radiations in Mev.

[2]*Chart of the Nuclides*, Knolls Atomic Power Laboratory, U.S. Atomic Energy Commission, 6th Ed., 2d Printing, Revised to December 1962.

REMOVAL OF SAMPLE FROM ALUMINUM IRRADIATION CAPSULES

1. Prepare equipment	Vise Tubing cutter
2. Clamp aluminum irradiation capsule in vise.	A small, standard machinist's vise is mounted on a heavy base and placed in a shielded manipulator cell. A vertical slot cut in the jaws of the vise assists in holding the irradiation can without crushing the side walls.
3. Cut top from irradiation can with tubing cutter.	Make cut as near top as possible. Do not cut too deep on any single revolution of the cutter to prevent binding and crimping of the soft aluminum.
4. Empty sample into beaker. **(a) If irradiated sample is not encapsulated in quartz, empty contents of can into a beaker for processing.**	Powdered samples may become dispersed during discharge from can. To prevent dusting, invert opened capsule on bottom of beaker containing a small quantity of water. Wash capsules with water to remove entire sample.
(b) If irradiated sample is encapsulated in quartz, remove quartz capsule and place in a Tygon tube for breaking.	See Fig. III-1. A 4- to 5-in. Tygon tube, with a cork stopper wired in place at one end, is loaded with the quartz capsule. The open end is closed with a second cork stopper after the tube walls are depressed to remove as much air as possible. Removal of air eliminates the possibility of blowing out the stopper when the quartz ampule is broken.
(1) Strike the quartz ampule in the tube with a small hammer.	Avoid crushing the capsule into small fragments. Crack the quartz so that it may be removed from the tube in large pieces.
(2) Open the tube and empty contents into beaker.	
(3) Wash Tygon tube with water to remove traces of sample.	
(4) Wash quartz fragments with water or reagents specified in procedure and decant solution into a clean beaker.	See individual procedures for proper reagent.

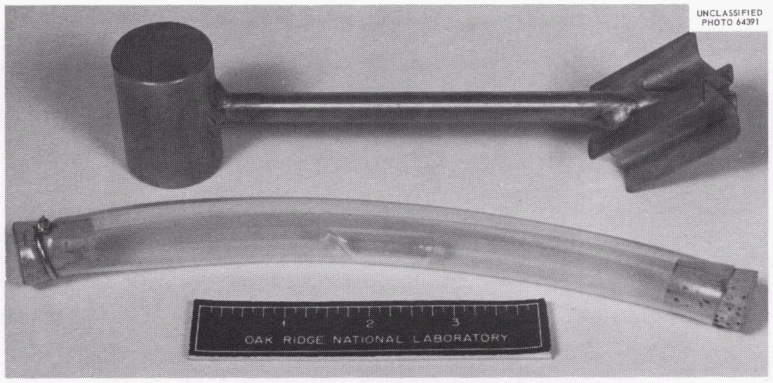

Fig. III-1. Equipment for Breaking Quartz Ampule.

ANTIMONY-122

Production method:	$^{121}Sb(n,\gamma)^{122}Sb$	Half-life: 2.75 days		
Cross section:	6.06 barns	Radiations:		
Target:	Antimony metal	Beta	Gamma	Other
Target weight:	1.0 g	0.74 (4.0%)	0.566 (66.0%)	EC 3.1%
Neutron flux:	1×10^{13} neutrons cm^{-2} sec^{-1}	1.40 (62.9%)	0.686 (3.4%)	
		1.97 (30.0%)	1.137 (0.73%)	
Irradiation time:	61 hr		1.258 (0.66%)	
Reactor yield:	300 mc	Processing facility and shielding required: manipulator cell, 3 in. lead equivalent		
Processing yield:	>95%			
Radiochemical purity:	99% (exclusive of ^{124}Sb)			

1. Prepare equipment.	200-ml flask with reflux condenser (Fig. III-2) 150-ml Pyrex beaker 100-ml product bottle Hot plate or heating mantle
2. Open aluminum irradiation can and break quartz ampule.	See opening procedure, p. 12.
3. Transfer target material into 200-ml flask.	Equip flask with reflux condenser to minimize loss of volatile $SbCl_3$.
4. Rinse Tygon tube with two 4-ml portions of 12 *M* HCl. Add to processing flask.	These rinses remove residual target material from Tygon and will provide adequate HCl for dissolution.
5. Add 2 to 3 ml of 16 *M* HNO_3 dropwise to aid in dissolution of target material.	Nitric acid minimizes formation of volatile $SbCl_3$.
6. Evaporate solution to ~1 ml.	Evaporation expels excess HNO_3, Cl_2, and NO_2.
7. Cool flask to room temperature, rinse with two 15-ml portions of cold 12 *M* HCl, and transfer to beaker.	Flask must be cooled to room temperature before opening to prevent volatilization of $SbCl_3$.
8. Decant solution from broken quartz ampule into a 100-ml product bottle and build volume to 50 ml with distilled H_2O.	Product solution should be clear and water-white. Final product should be greater than 6 *M* HCl to prevent precipitation of SbOCl.
9. Sample and analyze for: **Molarity of HCl** **Total solids** **^{122}Sb concentration** **Radiochemical purity**	Refer to *ORNL Master Analytical Manual* (TID-7015), procedure No. 9 0733040.

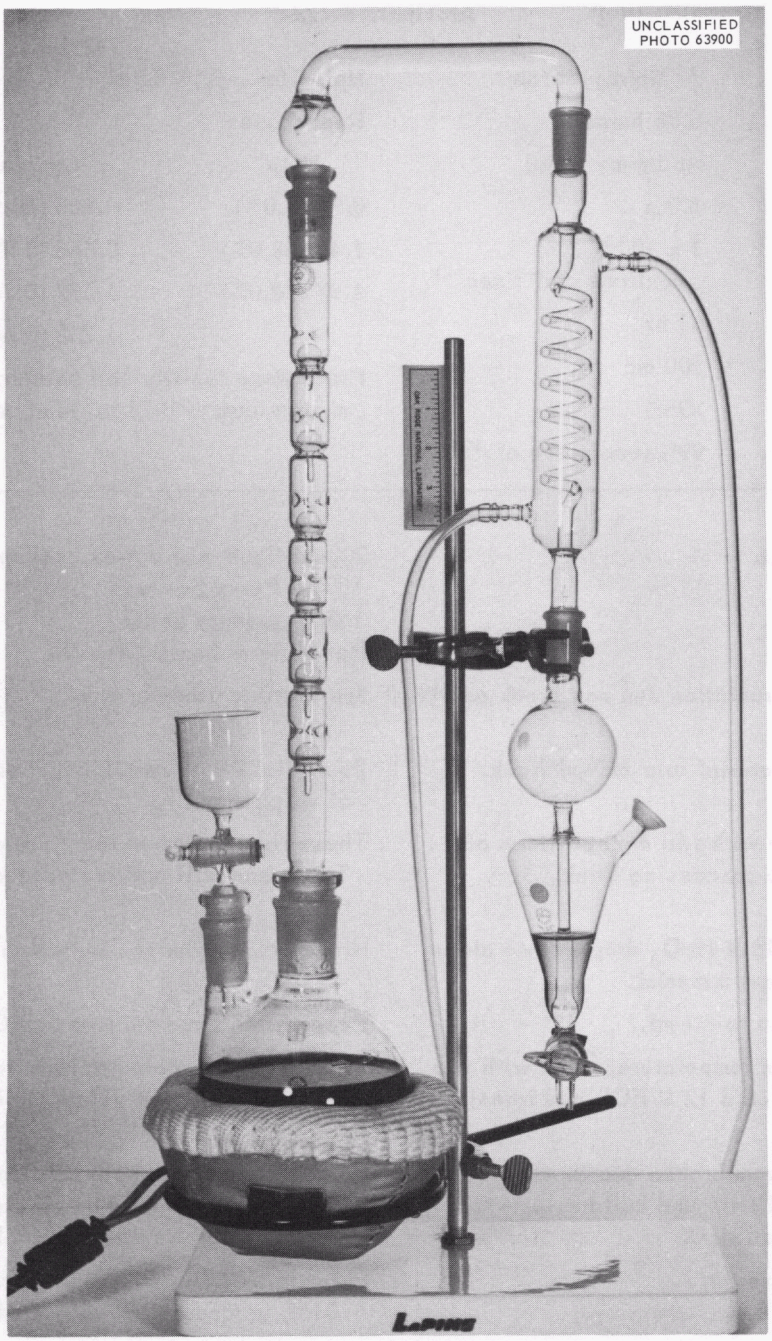

Fig. III-2. Glass Distillation Equipment with Reflux Condenser.

ANTIMONY-124

Production method:	$^{123}Sb(n,\gamma)^{124}Sb$
Cross section:	3.3 barns
Target:	Antimony metal
Target weight:	1.0 g
Neutron flux:	2×10^{14} neutrons cm^{-2} sec^{-1}
Irradiation time:	24 weeks
Reactor yield:	5 curies
Processing yield:	>95%
Radiochemical purity:	>99%

Half-life: 60.9 days

Radiations: [1]

Beta	Gamma
0.24	0.605
0.966	1.71
2.317	2.11

Processing facility and shielding required: manipulator cell, 3 in. lead equivalent

1. **Prepare product solution from target.**
2. **Sample and analyze for:**
   Molarity of HCl
   Total solids
   ^{124}Sb concentration
   Radiochemical purity

Procedure is identical to that for ^{122}Sb.

Refer to *ORNL Master Analytical Manual* (TID-7015), procedure No. 9 0733041.

ANTIMONY-125

Production method:

$$^{124}Sn(n,\gamma)\,^{125m}Sn \xrightarrow[10m]{\beta^-} {}^{125}Sb$$

Cross section:	0.004 barn
Target:	Tin metal foil
Target weight:	1 g
Neutron flux:	2×10^{14} neutrons cm^{-2} sec^{-1}
Irradiation time:	3 years
Reactor yield	30 mc
Processing yield:	>95%
Radiochemical purity:	99% (exclusive of ^{125m}Te daughter)

Half-life: 2.78 years

Radiations:

Beta	Gamma[1]
0.128 (29%)	0.035
0.300 (45%)	0.463
0.444 (12%)	0.595
0.612 (14%)	0.637

Processing facility and shielding required: manipulator cell, 6 in. lead equivalent

---

1. Prepare equipment.	200-ml flask fitted with reflux condenser (Fig. III-2) Hot off-gas scrubber unit (Fig. III-3) Column of 30-mesh tin metal (Fig. III-4) Magnetic stirrer Two 150-ml Pyrex beakers 250-ml Pyrex beaker Two 400-ml Pyrex beakers 250-ml separatory funnel 100-ml product bottle
2. Open irradiation can and transfer target to 200-ml flask fitted with reflux condenser.	See opening procedure, p. 12.
3. Add 10 to 12 ml of cold 12 *M* HCl through separatory funnel.	Dissolution of tin target requires ~8 hr.
4. Transfer solution from flask to 150-ml beaker and adjust to 3 to 4 *M* HCl with distilled H_2O.	Use flask rinse for dilution.
5. To prepare tin column, wash with 4 *M* HCl and then with H_2O.	
6. Pass dissolved target solution through tin column.	Effluent contains ^{113}Sn. Antimony-125 remains on column appearing as a black band in first 1 in. of column.
7. Transfer first 1 in. of tin containing ^{125}Sb from column and place in 150-ml beaker under hot off-gas scrubber assembly.	
8. Add 20 ml of 12 *M* HCl and allow tin to dissolve.	Addition of 2 to 3 drops of H_2O_2 aids in dissolution of ^{125}Sb.
9. Add 80 ml of 12 *M* HCl to increase volume to 100 ml.	
10. Add 20 ml of H_3PO_4 and 100 mg of ceric ammonium sulfate crystals.	Solution is pale yellow when oxidation of Sb^{3+} to Sb^{5+} is complete.

11. Extract solution with 50 ml of diisobutyl carbinol in heptane, using a magnetic stirrer in a 400-ml beaker.	Ratio 1 : 1; ~10 min contact time.
12. Transfer to funnel and separate phases.	Antimony-125 is extracted into organic phase.
13. Wash organic twice with 50-ml portions of 12 *M* HCl.	This step removes trace contaminants.
14. Wash organic phase three times with distilled H_2O and combine wash into 250-ml beaker.	Wash removes ^{125}Sb from the organic phase.
15. Evaporate to near dryness and fume with 16 *M* HNO_3.	Organic compounds are removed.
16. Fume with 12 *M* HCl.	Nitric acid is removed.
17. Dissolve residue in ~50 ml of 6 *M* HCl and transfer to product bottle.	
18. Sample and analyze for: Molarity of HCl Total solids ^{125}Sb concentration Radiochemical purity	Refer to *ORNL Master Analytical Manual* (TID-7015), procedure No. 9 0733402

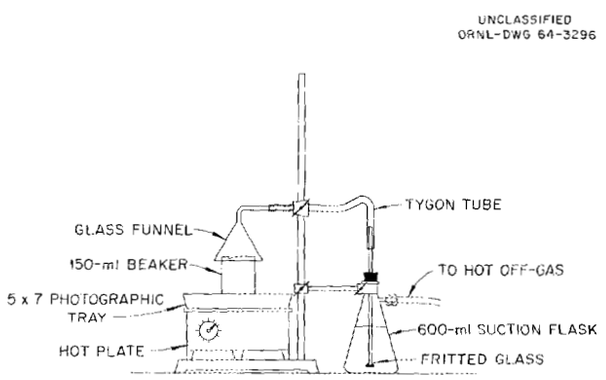

Fig. III-3. Hot Off-Gas Scrubber Unit.

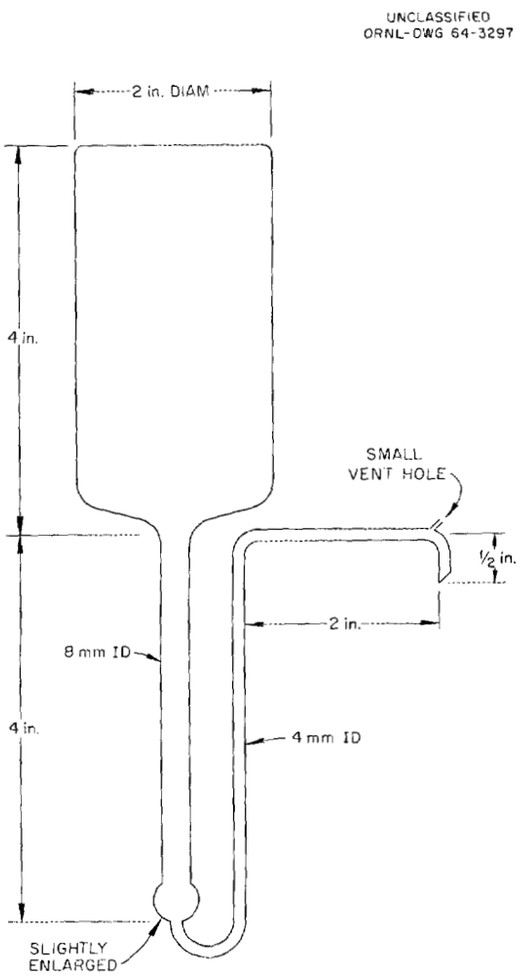

Fig. III-4. Ion Exchange Column with Head Vessel.

ARGON-37

Production method: $^{40}Ca(n,\alpha)^{37}Ar$ (by-product of ^{45}Ca production)	
Cross section:	Not known
Target:	CaO
Target weight:	3 g
Neutron flux:	2×10^{14} neutrons cm^{-2} sec^{-1}
Irradiation time:	3 months
Reactor yield:	600 mc
Processing yield:	>50%
Radiochemical purity:	>99%

Half-life: 34.3 days

Radiations: EC (emits characteristic Cl x ray of 2.6 kev)

Processing facility and shielding required: manipulator cell, ~4 in. lead equivalent; hot hood equipped with fixed equipment

1. Prepare equipment.	150-ml suction flask 500-ml round vacuum flask 50-ml separatory funnel Fixed equipment (Fig. III-5)
2. Open irradiation can and transfer CaO target into 150-ml suction flask.	See opening procedure, p. 12.
3. Connect evacuated collection flask to side arm of suction flask.	Do not open collection flask valve.
4. Slowly introduce 50 ml of 0.5 *M* HCl into the suction flask through separatory funnel.	
5. Open collection flask valve.	Verify that separatory funnel valve is closed when collection flask valve is opened.
6. When all of CaO is in solution, carefully fill suction flask to level of side arm with 0.5 *M* HCl.	Argon-37 is displaced into collection flask.
7. Close valve of collection flask and remove from manipulator cell to hot hood for final purification.	
8. Connect collection flask to argon purification system.	
9. Pump ^{37}Ar from collection flask through calcium trap heated to 800°C.	Pump until manometer indicates constant pressure. Air and water vapor are removed.
10. Determine quantity of ^{37}Ar collected.	Pump gas into evacuated ion chamber and take reading.[3]
11. Pump gas back into purification system and fill ampules as needed.	Sample and analysis steps are not applicable for this gas.

[3] K. E. Wilzbach, A. R. Van Dyken, and Louis Kaplan, *Determination of Tritium by Ion Current Measurement*, ANL-5143 (October 1953); also published in *Anal. Chem.* 26: 880–83 (1954).

UNCLASSIFIED
ORNL-DWG 64-3298

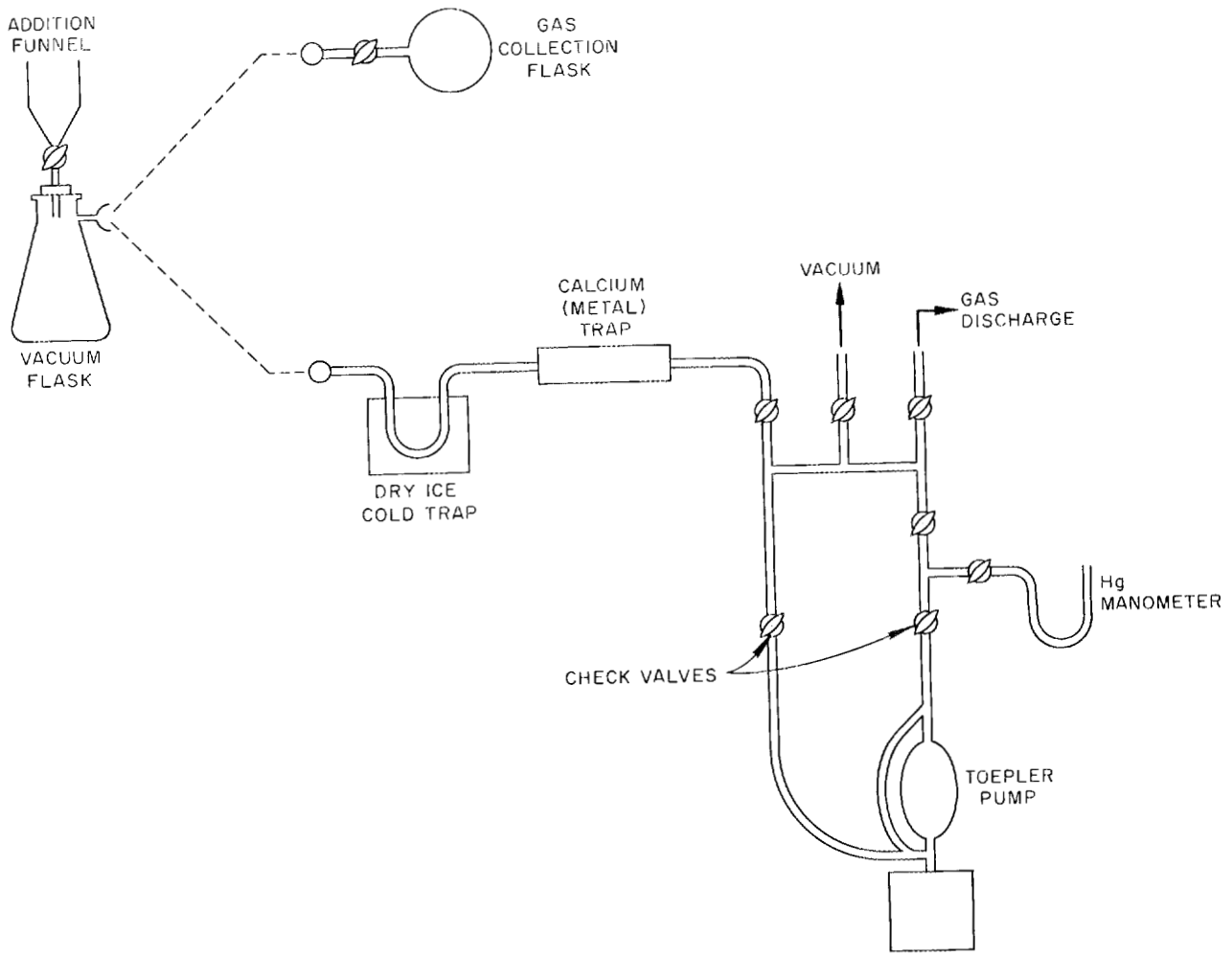

Fig. III-5. Flow Diagram for ^{37}Ar Purification.

ARSENIC-76

Production method:	$^{75}As(n,\gamma)^{76}As$	Half-life:	26.8 hr
Cross section:	4.3 barns	Radiations:	
Target:	As_2O_3	Beta	Gamma[1]
Target weight:	50 mg	0.36 (2.5%)	0.549
Neutron flux:	0.7×10^{13} neutrons cm^{-2} sec^{-1}	1.76 (16%)	1.20
		2.41 (31%)	1.40
Irradiation time:	60 hr	2.96 (50.5%)	2.05
Reactor yield:	150–200 mc	Processing facility and shielding required: manipulator cell, 2 to 3 in. lead equivalent	
Processing yield:	>95%		
Radiochemical purity:	>98%		

1. Prepare equipment.	Hot off-gas scrubber unit (Fig. III-3) 150-ml Pyrex beaker 100-ml product bottle
2. Open irradiation can and transfer target material into beaker placed under hot off-gas scrubber assembly.	See opening procedure, p. 12.
3. Dissolve target material in a minimum amount of 12 *M* HCl and H_2O_2.	The target, As_2O_3, is slowly soluble in cold HCl, but is readily soluble in hot HCl when a few drops of H_2O_2 are added. Avoid boiling because loss of arsenic as volatile $AsCl_3$ may occur.
4. Adjust volume to 50 ml of 1 *M* HCl and transfer to 100-ml product bottle.	Product solution should be clear and water-white.
5. Sample and analyze for: **Normality of HCl** **Total solids** **^{76}As concentration** **Radiochemical purity**	Refer to *ORNL Master Analytical Manual* (TID-7015), procedure No. 9 0733063.

ARSENIC-77

Production method:

$^{76}Ge(n,\gamma)^{77}Ge \xrightarrow[12h]{\beta} {}^{77}As$

Cross section:	0.2 barn
Target:	GeO_2
Target weight:	5.0 g
Neutron flux:	2×10^{14} neutrons cm^{-2} sec^{-1}
Irradiation time:	60 hr
Reactor yield:	70 mc
Processing yield:	>80%
Radiochemical purity:	>99%

Half-life: 38.7 hr

Radiations: [1]

Beta	Gamma
~0.44	0.086
0.7	0.246
	0.524

Processing facility and shielding required: manipulator cell, 3 to 4 in. lead equivalent

---

1. Prepare equipment.	300-ml flask with reflux condenser (Fig. III-2) 100-ml product bottle Hot plate or heating mantle
2. Open irradiation can and transfer target material and broken quartz capsule into processing flask.	See opening procedure, p. 12.
3. Add 50 ml of 12 *M* HCl and heat flask. Introduce 30% H_2O_2 into flask at the rate of ~1 drop/min.	Hydrogen peroxide aids in the dissolution of GeO_2 and oxidizes the As^{3+} to As^{5+} to prevent loss of volatile $AsCl_3$.
4. Distil for ~1 hr to remove Ge as $GeCl_4$.	Continue addition of H_2O_2 during distillation.
5. Dilute with distilled H_2O to ~40 ml and transfer to product bottle.	Volume in boiling flask should be reduced to ~12 ml.
6. Wash quartz fragments from irradiation capsule remaining in flask with 10 ml of distilled H_2O and add to product.	
7. Sample and analyze for: **Molarity of HCl** **Total solids** **^{77}As concentration** **Radiochemical purity**	Refer to *ORNL Master Analytical Manual* (TID-7015), procedure No. 9 0733064.

BARIUM-131

Production method:	$^{130}Ba(n,\gamma)^{131}Ba$	Half-life:	12.0 days	
Cross section:	8.8 barns	Radiations:		
Target:	$BaCO_3$	Beta	Gamma	Other
Target weight:	44.0 g	None	0.083 (weak)	EC
Neutron flux:	2×10^{14} neutrons cm^{-2} sec^{-1}		0.372	
			0.496 (strong)	
Irradiation time:	40 hr		1.032 (weak)	
Reactor yield:	5 mc	Processing facility and shielding required: manipulator cell, 3 to 4 in. lead equivalent		
Processing yield	95%			
Radiochemical purity:	>98% (exclusive of ^{131}Cs daughter)			

1. Prepare equipment.	150-ml Pyrex beaker Hot off-gas scrubber unit (Fig. III-3) 20-ml sintered-glass funnel 100-ml product bottle
2. Open irradiation can and transfer target into beaker containing 10 ml of distilled H_2O placed under hot off-gas scrubber assembly.	See opening procedure, p. 12.
3. Slowly add 6 *M* HNO_3 until $BaCO_3$ is dissolved.	Rapid addition causes excessive liberation of CO_2.
4. Evaporate to near dryness, add 10 ml of 12 *M* HCl, and heat until reddish-brown fumes are no longer evolved from the solution.	This step converts $Ba(NO_3)_2$ to $BaCl_2$.
5. Cool beaker and add 20 ml of 12 *M* HCl.	All barium precipitates as $BaCl_2$.
6. Filter precipitate on a sintered-glass funnel and wash twice with 20-ml portions of 12 *M* HCl.	Use fine sintered-glass funnel. Check filtrate for ^{133}Ba activity. If low, discard.
7. Dissolve precipitate from filter with a minimum quantity of distilled H_2O and rinse filter.	
8. Adjust volume to ~50 ml of 1 *M* HCl and transfer to product bottle.	Product solution should be clear and water-white.
9. Sample and analyze for: **Molarity of HCl** **Total solids** **^{131}Ba concentration** **Radiochemical purity**	Refer to *ORNL Master Analytical Manual* (TID-7015), procedure No. 9 0733085.

BARIUM-133

Production method:	$^{132}Ba(n,\gamma)^{133}Ba$	Half-life:	7.5 years[2]		
Cross section:	7 barns	Radiations:			
Target:	$BaCO_3$, enriched to 7% ^{132}Ba	Beta		Gamma	Other
		None		0.057	EC
Target weight:	140 mg			0.082	
Neutron flux:	2×10^{14} neutrons cm^{-2} sec^{-1}			0.300	
				0.357	
Irradiation time:	2 years	Processing facility and shielding required: manipulator cell, 3 to 4 in. lead equivalent			
Reactor yield:	250 mc				
Processing yield:	>90%				
Radiochemical purity:	>98%				

1. **Prepare equipment and process target for ^{133}Ba.**
2. **Sample and analyze for:**
   - **Molarity of HCl**
   - **Total solids**
   - **^{131}Ba concentration**
   - **^{133}Ba concentration**
   - **Radiochemical purity**
   - **Heavy metals**

Equipment and procedures are identical to those for ^{131}Ba.

Refer to *ORNL Master Analytical Manual* (TID-7015), procedure No. 9 0733084.

BARIUM-140–LANTHANUM-140; STRONTIUM-89 AND -90

Production method:	Fission	Half-life:	^{140}Ba, 12.8 days; ^{140}La, 40.3 hr; ^{89}Sr, 50.5 days; ^{90}Sr, 28 years	
Fission yield:	^{140}Ba 6.3% ^{89}Sr 4.8%	Radiations:		
Target:	U-Al alloy	Isotope	Beta	Gamma [1]
Irradiation time:	21 days	^{140}Ba	0.480 (40%)	0.030
Radiochemical purity:	^{140}Ba >99% (exclusive of ^{140}La daughter)		1.022 (60%)	0.162 0.537
	^{140}La in equilibrium	^{140}La	1.32 (~70%) 1.67 (~20%) 2.26 (~10%)	0.093 1.60 2.50 3.0 (weak)
		^{89}Sr	1.463	None
		^{90}Sr	0.61	None
		Processing facility and shielding required: manipulator cell, 8 in. lead equivalent (needed for ^{140}Ba-^{140}La)		

Source of Material

Material processed for short-lived fission products is 5 g of ^{235}U alloyed with 105 g of aluminum. This is irradiated in a neutron flux of $\sim 2 \times 10^{14}$ for 4 weeks. The alloy is dissolved in NaOH to remove aluminum, followed by HNO_3 to dissolve the uranium. The volume of the solution of dissolved uranium is ~3 liters. After the ^{131}I is removed from this solution, 200 ml is used for the short-lived fission products (see ^{131}I processing procedure). Uranium and plutonium are extracted with tributyl phosphate (TBP). The solution is ~5 to 6 *M* HNO_3.

Processing Sample

1. Prepare equipment.	Extractor (Fig. III-6) Four 500-ml Pyrex beakers Three ion exchange columns (15 mm × 18 in.; two 10 mm × 4–5 in.) Hot plate 100-ml sample collection bottles
2. Add ~200 mg of lead as $Pb(NO_3)_2$ and transfer to extractor.	Lead is used as carrier for Ba-Sr nitrates.
3. Make solution 65% HNO_3 with fuming HNO_3. Agitate for 5 min.	Lead nitrate with Ba-Sr is insoluble in 65% HNO_3, forming a white precipitate. Except for traces, other ions remain in solution.
4. Filter solution and leave precipitate on fritted disk. Wash precipitate with fuming HNO_3 and add wash solution to filtrate.	Save filtrate and use for short-lived rare-earth processing.

5. Add 50 ml of distilled H_2O to $Pb(NO_3)_2$ precipitate. Agitate for 5 min to dissolve precipitate. Transfer solution to a clean vessel by vacuum transferring through a fritted glass. Repeat twice.	Lead nitrate and Ba-Sr are soluble in H_2O.
6. Boil $Pb(NO_3)_2$ solution to dryness.	Excess acid is removed.
7. Dissolve $Pb(NO_3)_2$ with 75 ml of distilled H_2O. Add 100 ml of H_2O saturated with H_2S. Filter.	Hydrogen sulfide removes lead as PbS. Filtrate contains Ba-Sr.
8. Prepare 15-mm × 18-in. ion exchange column with hot-water jacket. Set column discharge line to pass through ion chamber. Fill column with −50 +100 mesh, hydrogen-form Dowex 50W-X12 resin. Flatten top of resin.	The ion chamber penetrated by the column discharge line is used to monitor activity peaks (Fig. III-7). Flat top on resin ensures good band formation during loading.
9. Load resin with Ba-Sr solution at full flow rate. Wash with 150 ml of distilled H_2O.	
10. Elute column with 0.2 *M* citric acid at pH 3.5 at rate of 1 drop per 3 sec until first peak shows on ion chamber. Introduce 80°C hot water to jacket 1 hr after elution begins. Collect fractions in 100-ml bottles.	Degas citric acid solution by boiling before introducing it into column. First peak is ^{140}La plus occluded rare earths. Dissolved air in column must be swept out by degassed eluant before hot H_2O is applied to jacket of column.
11. When ^{140}La peak has eluted from column, raise the pH of citric acid eluant solution in feed tank to 6.0–6.5. Continue elution as before.	Higher pH moves Ba-Sr more rapidly.
12. When second peak begins to show on ion chamber, change to new bottle. When peak is nearly gone, change again.	Second peak is ^{89}Sr.
13. Continue elution. When third peak begins, change to new bottle. When peak goes down, stop collection. Stop column.	Third peak is ^{140}Ba.
14. Sample each bottle of second and third peaks separately. Submit to laboratory for analysis.	Determine which fractions of second peak are pure ^{89}Sr. Determine which fractions of third peak are pure ^{140}Ba.
15. Prepare two columns 10 mm × 4 to 5 in. Fill with hydrogen-form −50 + 100 mesh Dowex 50W-X12 resin.	One column is for concentration of ^{140}Ba and the other for ^{89}Sr.
16. To the selected fractions of ^{140}Ba, add 3 ml of concentrated HCl per 100 ml of fraction. Agitate and dilute to 400 ml with distilled H_2O. Load onto one of the small columns.	Hydrochloric acid breaks the citrate complex and permits the barium to sorb on resin.
Wash with 50 ml of distilled H_2O.	Wash removes citric acid.
17. Strip column with 100 ml of 3 *M* HNO_3 and wash with 50 ml of distilled H_2O.	This step strips barium from resin.
18. Boil HNO_3-Ba solution to dryness. Fume twice with concentrated HNO_3, then twice with concentrated HCl.	This step destroys organic compounds and converts barium to chloride form.

19. Take up $BaCl_2$ in 100 ml of 1.0 *M* HCl.

20. Sample and analyze for:
    Total solids
    Heavy metals
    ^{140}Ba concentration
    Radiochemical purity, including gross alpha

Refer to *ORNL Master Analytical Manual* (TID-7015), procedure Nos. 9 0733081 and 9 0733082.

Strontium-89 and -90

21. Collect ^{89}Sr fractions obtained in step 12 and add 3 ml of concentrated HCl. Dilute to 400 ml with distilled H_2O. Load onto a small ion exchange column as prepared in step 15.

Hydrochloric acid breaks citrate complex and permits ^{89}Sr to sorb on resin.

22. Strip column with 100 ml of 3 *M* HNO_3 and wash with 50 ml of distilled H_2O.

Elution removes ^{89}Sr.

23. Boil HNO_3-^{89}Sr solution to dryness and fume twice with HNO_3.

Treatment destroys organic compounds.

24. Fume with HCl.

Hydrochloric acid converts nitrate to chloride.

25. Dissolve $^{89}SrCl_2$ in 100 ml of 1 *M* HCl.

26. Sample and analyze for:
    ^{89}Sr concentration
    Gross alpha
    Heavy metals
    Total solids
    Radiochemical purity

Refer to *ORNL Master Analytical Manual* (TID-7015), procedure No. 9 0733801.

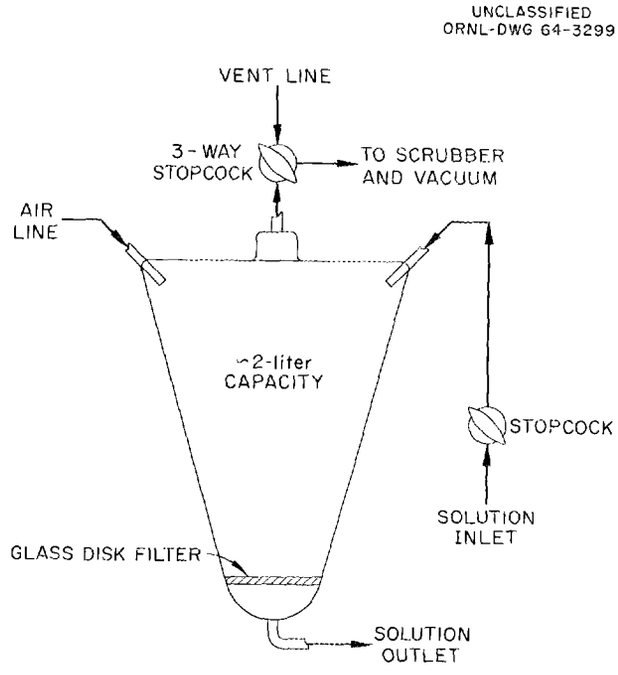

Fig. III-6. Pyrex Extractor Vessel with Filter.

UNCLASSIFIED
ORNL-DWG 64-3300

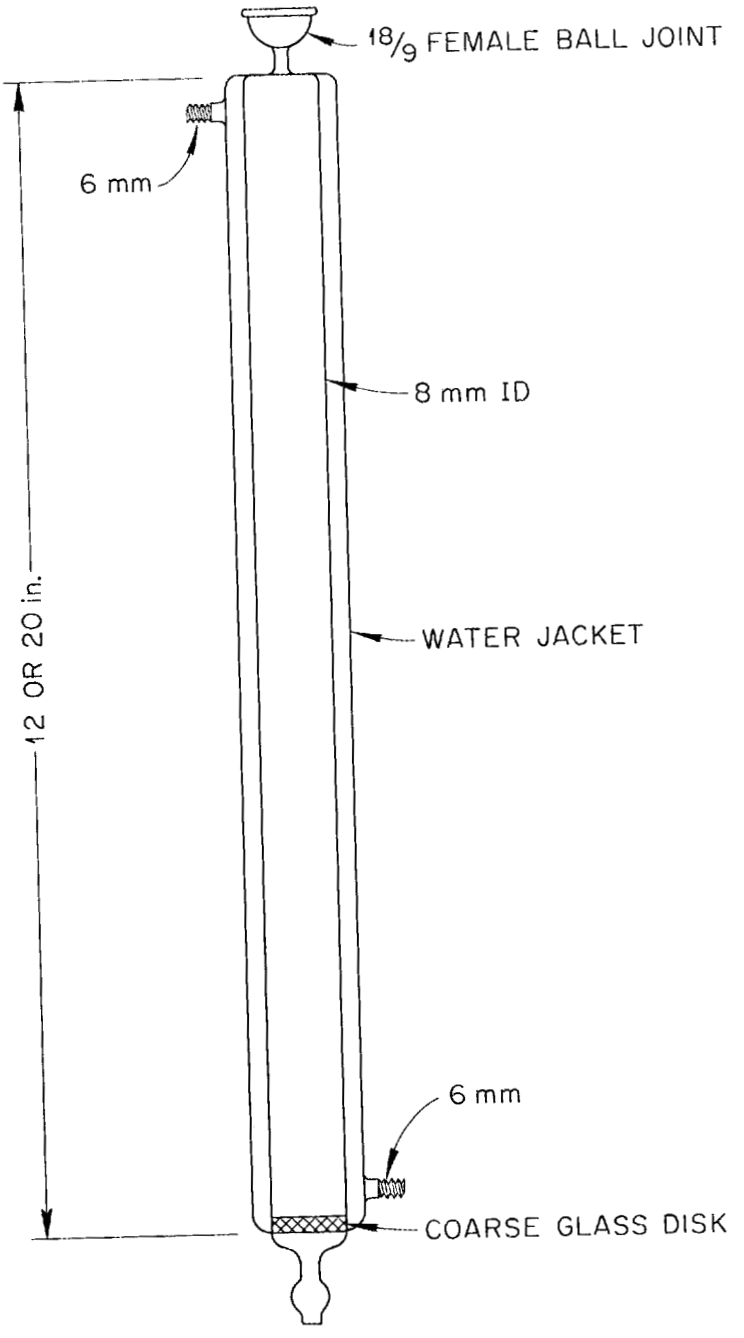

Fig. III-7. Jacketed Ion Exchange Column.

BISMUTH-210 (RaE)

Production method:	$^{209}Bi(n,\gamma)^{210}Bi$	Half-life:	5.00 days		
Cross section:	0.015 barn	Radiations:			
Target:	Bismuth metal powder or lumps	Alpha	Beta	Gamma	
		$(5 \times 10^{-5}\%)$	1.17 ($99^{+}\%$)	None	
Target weight:	150 mg	Processing facility or shielding required: manipulator cell, 2 to 3 in. lead equivalent			
Neutron flux:	2×10^{14} neutrons cm^{-2} sec^{-1}				
Irradiation time:	60 hr				
Reactor yield:	16 mc				
Processing yield:	>95%				
Radiochemical purity:	>98% (exclusive of ^{210}Po and ^{206}Tl daughters)				

1. Prepare equipment.	Hot off-gas scrubber unit (Fig. III-3) 150-ml Pyrex beaker 100-ml product bottle
2. Open irradiation can and transfer target material into beaker placed under hot off-gas scrubber assembly.	See opening procedure, p. 12.
3. Cover target material with 5–10 ml distilled H_2O and add 16 *M* HNO_3 dropwise to dissolve target.	
4. Heat gently until target is completely dissolved.	
5. Build volume to 50 ml with 3 *M* HNO_3 and transfer to product bottle.	Product solution should be clear and water-white.
6. Sample and analyze for: **Molarity of HNO_3** **Total solids** **^{210}Bi concentration** **Radiochemical purity**	Refer to *ORNL Master Analytical Manual* (TID-7015), procedure Nos. 9 0732005, 9 002301, 9 073300, 9 002302, and 9 073302.

BROMINE-82

Production method:	$^{81}Br(n,\gamma)^{82}Br$	Half-life:	35.55 hr
Cross section	3 barns	Radiations:	
Target:	KBr	Beta	Gamma[1]
Target weight:	150 mg	0.465	0.547
Neutron flux:	2×10^{14} neutrons cm^{-2} sec^{-1}		0.766
			1.312
Irradiation time:	40 hr	Processing facility and shielding required: manipulator cell, 6 in. lead equivalent	
Reactor yield:	4 curies		
Processing yield:	>90%		
Radiochemical purity:	>98%		

1. Prepare equipment.	Two ion exchange columns (Fig. III-8). Three 150-ml Pyrex beakers Hot off-gas scrubber unit (Fig. III-3)
2. Open irradiation can and transfer target material to beaker placed under a hot off-gas assembly.	See opening procedure, p. 12.
3. Add 25 ml of distilled H_2O.	Water dissolves target.
4. Prepare two 50-ml ion exchange columns with Amberlite IR-120 cation resin.	Condition one column with 6 *M* HCl and wash with distilled H_2O until effluent is neutral. Condition a second column to potassium form with 1 *M* KOH solution and wash with distilled H_2O until neutral.
5. Place dissolved target solution in head tank of first column. Effluent from this column is transferred directly to head tank of the second column.	
6. When solution has passed through both columns, wash columns with three 25-ml washes of distilled H_2O.	Potassium remains on first column, and ^{82}Br elutes from second column as KBr.
7. Combine effluents into a clean beaker and evaporate to 50 ml.	
8. Sample and analyze for: **^{82}Br concentration** **Radiochemical purity** **Total solids**	Refer to *ORNL Master Analytical Manual* (TID-7015), procedure No. 9 0733131.

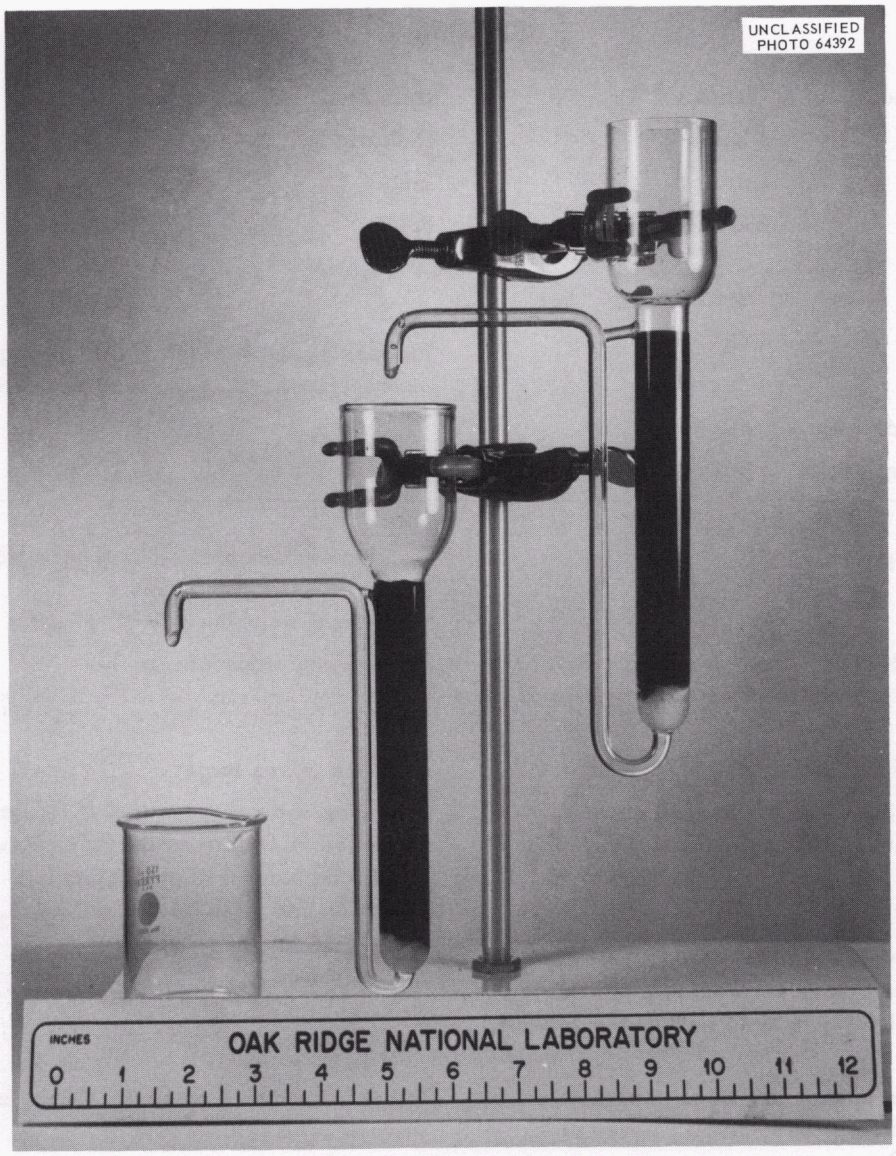

Fig. III-8. Double Ion Exchange Column for ^{82}Br Purification.

CADMIUM-109

Production method:	$^{108}Cd(n,\gamma)^{109}Cd$
Cross section:	0.2 barn[4]
Target:	CdO, enriched to 70% ^{108}Cd
Target weight:	29 mg
Neutron flux:	2×10^{14} neutrons cm^{-2} sec^{-1}
Irradiation time:	1.5 years
Reactor yield:	53 mc
Processing yield:	>95%
Radiochemical purity:	^{109}Cd >99% (exclusive of ^{115m}Cd) ^{115m}Cd <5%

Half-life: 1.3 years

Radiations:

Beta	Gamma	Other
None	0.087	EC

Processing facility and shielding required: manipulator cell or hot hoods equipped with hot off-gas facilities, ~3 in. lead equivalent

[4]Average of experimental values obtained in the ORR.

---

1. Prepare equipment.	Hot off-gas scrubber unit (Fig. III-3). 150-ml Pyrex beaker 100-ml product bottle
2. Open irradiation can and transfer target material into a beaker placed under hot off-gas assembly.	See opening procedure, p. 12.
3. Cover target material with a minimum amount of distilled H_2O and add 16 *M* HNO_3 dropwise to dissolve target.	A little heat will increase rate of dissolution.
4. Adjust volume to 50 ml of 1 *M* HNO_3 and transfer to product bottle.	Product solution should be clear and water-white.
5. Sample and analyze for: **Total solids** **Molarity of HNO_3** **^{109}Cd concentration** **Radiochemical purity** **^{115m}Cd concentration**	Refer to *ORNL Master Analytical Manual* (TID-7015), procedure No. 9 0732005.

CADMIUM-115*m*

Production method:	$^{114}Cd(n,\gamma)^{115m}Cd$	Half-life	43 days
Cross section:	0.14 barn	Radiations:	
Target:	Cadmium metal as small lumps	Beta	Gamma
		~0.3 (weak)	0.485
Target weight:	100 mg	0.7 (~2%)	0.935
Neutron flux:	2×10^{14} neutrons cm^{-2} sec^{-1}	1.61 (~98%)	1.30
Irradiation time:	21 weeks	Processing facility and shielding required: manipulator cell or hot hood equipped with hot off-gas facilities, ~3 in. lead equivalent	
Reactor yield:	80 mc		
Processing yield:	>95%		
Radiochemical purity:	>90%		

1. **Prepare equipment and process target for ^{115m}Cd.**

   Equipment and procedures are identical to those for ^{109}Cd.

2. **Sample and analyze for:**
   - **Total solids**
   - **Molarity of HNO_3**
   - **^{115m}Cd concentration**
   - **Radiochemical purity**
   - **^{109}Cd concentration**

   Refer to *ORNL Master Analytical Manual* (TID-7015), procedure No. 9 0733141.

CADMIUM-115

Production method:	$^{114}Cd(n,\gamma)^{115}Cd$	Half-life:	53.5 hr
Cross section:	1.1 barns	Radiations:	
Target:	Cadmium metal	Beta	Gamma
Target weight:	100 mg	0.58 (42%)	0.335*
Neutron flux:	2×10^{14} neutrons cm^{-2} sec^{-1}	1.11 (58%)	0.360
			0.500
Irradiation time:	7 days		0.525
Reactor yield:	65 mc	*Gamma from 4.5-hr ^{115m}In daughter.	
Processing yield:	>95%		
Radiochemical purity:	>98% (exclusive of ^{115m}In daughter)	Processing facility and shielding required: manipulator cell or hot hoods equipped with hot off-gas facilities, ~3 in. lead equivalent	

1. **Prepare equipment and process target for ^{115}Cd.**	Equipment and procedures are identical to those for ^{109}Cd.
2. **Sample and analyze for:** **Total solids** **Molarity of HNO_3** **^{115}Cd concentration** **Radiochemical purity**	Refer to *ORNL Master Analytical Manual* (TID-7015), procedure No. 9 0733142.

CALCIUM-45

Production method:	$^{44}Ca(n,\gamma)^{45}Ca$	Half-life:	165.1 days
Cross section:	0.7 barn	Radiations:	
Target:	$CaCO_3$	Beta	Gamma
Target weight:	6 g	0.254	None
Neutron flux:	2×10^{14} neutrons cm^{-2} sec^{-1}	Processing facility and shielding required: manipulator cell, ~2 in. lead equivalent	
Irradiation time:	4.5 years		
Reactor yield:	2 curies		
Processing yield:	>90%		
Radiochemical purity:	>99%		

1. **Prepare equipment.**	Hot off-gas scrubber unit (Fig. III-3) 600-ml separatory funnel 150-ml Pyrex beaker 500-ml evaporating dish 100-ml product bottle
2. **Open irradiation can and transfer contents to beaker containing ~10 ml of distilled H_2O.**	See opening procedure, p. 12.
3. **Add 12 *M* HCl dropwise to beaker to dissolve $CaCO_3$ sample.**	Avoid rapid acid addition to prevent effervescence and loss of sample.
4. **Evaporate to near dryness under a hot off-gas scrubber assembly and redissolve in 150 to 200 ml of H_2O.**	
5. **Prepare thenoyltrifluoroacetone (TTA)-benzene solution for extraction of ^{46}Sc contaminant.**	Dissolve 111 g of TTA in 1 liter of benzene. Equilibrate with 12 *M* HCl in a separatory funnel. Shake well for ~5 min. Wash TTA-benzene solution with an equal volume of distilled H_2O.
6. **Transfer ^{45}Ca solution to separatory funnel and add an equal volume of TTA-benzene solution. Shake for 3 min and allow aqueous and organic phases to separate.**	Scandium-46 is extracted into the organic phase.
7. **Separate aqueous phase and discard organic phase.**	
8. **Repeat extraction until no ^{46}Sc activity is extracted into organic phase.**	
9. **Evaporate H_2O-^{45}Ca solution to dryness and fume twice with 16 *M* HNO_3.**	This step removes traces of organic compounds.
10. **Fume twice with 12 *M* HCl.**	Treatment removes HNO_3; $CaCl_2$ is formed.
11. **Dissolve in 50 ml of distilled H_2O, filter through a fine, sintered-glass filter into product bottle.**	

12. Sample and analyze for:
    - Total solids
    - Molarity of HCl
    - Heavy metals
    - ^{45}Ca concentration
    - Radiochemical purity

Refer to *ORNL Master Analytical Manual* (TID-7015), procedure No. 9 0733142.

CALCIUM-47–SCANDIUM-47

Production method:	$^{46}Ca(n,\gamma)^{47}Ca$
Cross section:	0.3 barn
Target:	$CaCO_3$
Target weight:	500 mg, enriched to 0.46% ^{46}Ca*
Neutron flux:	$\sim 2 \times 10^{14}$ neutrons cm^{-2} sec^{-1}
Irradiation time:	17 days
Reactor yield:	$\sim$1.25 mc
Processing yield	>95%

Radiochemical purity:
^{47}Ca >99% (exclusive of ^{45}Ca)
^{45}Ca <10%
^{47}Sc in equilibrium

*This material is actually $\sim$30% ^{46}Ca which has been diluted to $\sim$0.5% with pure ^{40}Ca. Hence the $^{46}Ca/^{44}Ca$ ratio is high.

Half-life: ^{47}Ca 4.53 days
^{47}Sc 3.5 days

Radiations:

Isotope	Beta	Gamma
^{47}Ca	0.70 (76%)	0.500 (5%)
	1.90 (24%)	0.812 (5%)
		1.29 (71%)
^{47}Sc	0.46 (66%)	0.157 (66%)
	0.62 (34%)	

Processing facility and shielding required: manipulator cell, 4 in. lead equivalent

---

1. **Prepare equipment.**
   Hot off-gas scrubber unit (Fig. III-3)
   150-ml Pyrex beaker
   100-ml product bottle
   Fine fritted-glass filter
2. **Open irradiation can and remove quartz ampule containing target material.**
   See opening procedure, p. 12.
3. **Transfer target material into a 150-ml Pyrex beaker placed under hot off-gas scrubber assembly.**
4. **Dissolve target material using 12 *M* HCl.**
   Add HCl dropwise to control effervescence.
5. **Adjust volume to 50 ml with 1 *M* HCl and filter into product bottle.**
   Broken quartz ampule will remain in beaker. Product solution should be clear and water-white.
6. **Sample and analyze for:**
   Total solids
   Molarity of HCl
   ^{47}Ca concentration
   Radiochemical purity
   ^{45}Ca concentration
   Refer to *ORNL Master Analytical Manual* (TID-7015), procedure Nos. 9 0732005, 9 002302, 9 0733002, and 9 0733151.

CARBON-14

Production method:	$^{14}N(n,p)^{14}C$	Half-life:	5.57×10^3 years
Cross section:	1.8 barns	Radiations:	
Target:	Be_3N_2	Beta	
Target weight:	160 g/irradiation can	0.155	
Radiochemical purity:	>99%	Processing facility and shielding required: manipulator cell, 6 in. lead equivalent; for $BaCO_3$, minimal.	

1. **Prepare equipment.**	Fixed equipment (Fig. III-9).
2. **Declad Be_3N_2 by melting aluminum irradiation can with rf heater.**	Five minutes in the rf field will melt the aluminum, allowing Be_3N_2 pellets to fall free. This must be performed in a manipulator cell.
3. **Place pellets in bottom-opening shielded carrier and transport to dissolver.**	**Caution:** Since there is danger of gross contamination, cover the carrier with a plastic bag. Care also should be taken to prevent contamination with normal carbon.
4. **To check ^{14}C system for leaks (Fig. III-9), apply 5 psig with nitrogen and valve off. Observe pressure for 3 to 4 hr.**	If there is no loss of pressure, the system is assumed tight. Nitrogen is vented into cell ventilation system.
5. **Add 15 liters of H_2O to dissolver and place Be_3N_2 pellets inside.**	A normal run consists of 80 pellets, each weighing 40 g or a total of 3200 g of Be_3N_2. Remove cover from the addition chute. Position transfer carrier ¼ in. above the chute using small "A" frame equipped with hydraulic lift and casters. **Caution:** Do not allow carrier to rest on the chute. Allow pellets to enter the dissolver by slowly opening the bottom of the carrier. Remove carrier and replace cover on the chute.
6. **Repeat system integrity check.**	
7. **Heat water until condensate is observed returning to dissolver.**	This step expels air and CO_2 dissolved in the H_2O. Air is undesirable because it contains CO_2 and because it will form an explosive mixture with hydrogen evolved during dissolution of the pellets. Vent system to the hood during this phase.
8. **Fill conversion furnace with cupric oxide wire.**	The furnace is conditioned by heating to 800°C and passing O_2 through it for 30 min. This removes carbon and ensures the complete oxidation of the copper.
9. **Fill absorption system with 2.4 *M* NaOH solution by adding solution through the bottom of each scrubber.**	**Caution:** Basic solutions [NaOH and $Ba(OH)_2$] absorb CO_2 from air. Use Ascarite to protect these solutions.

10. Purge dissolver system with helium at ~5 cm^3/min for 15 min.	Remove any oil present in helium by passing the gas over CuO heated to 750°C then through NaOH solution before it enters dissolver. This should be done in separate system. Vent gas from the dissolver system to cell ventilation.
11. Valve dissolver gas through absorption system.	Hold dissolver pressure to less than 0.5 psig by applying vacuum to scrubber exhaust. Purge for 2 hr to remove oxygen completely.
12. Add concentrated H_2SO_4 at a rate of ~5 ml/min to dissolver and adjust heat to prevent the reaction from becoming too vigorous. After 15 min increase the rate of acid addition.	Watch the bubble rate of liberated gas closely. If gas is liberated too fast, individual bubbles are not formed and acid flow should be decreased.
13. Continue adding acid until 4 ml of acid per gram of Be_3N_2 has been added.	Do not leave solution unattended during acid addition. Adjust reflux rate. Continue helium sweep.
14. Digest for 6 to 8 hr.	
15. Add ~4 liters of 30% H_2O_2 at a rate of ~5 ml/min to remove residual carbon from the system.	Note: The first scrubber should be drained and refilled with NaOH solution once during a run. The second scrubber need not be changed. The NaOH is drained into a polyethylene bottle which is equipped with an Ascarite-protected vent. At the conclusion of the run, the scrubbers are rinsed with water which is also collected.
16. Prepare product $Ba^{14}CO_3$. (*a*) Add saturated solution of $Ba(OH)_2$ to precipitate the carbonate. (*b*) Filter and wash carbonate until pH paper indicates that no caustic is present. (*c*) Dry carbonate by washing with acetone and transfer to product bottle.	Caution: This operation must be done in the absence of CO_2.
17. Sample and analyze for: Total solids $^{14}C/^{12}C$ ratio Radiochemical purity Chemical purity	Store in sealed bottles and protect from atmospheric CO_2 at all times. Refer to *ORNL Master Analytical Manual* (TID 7015), procedure Nos. 9 0733151, 9 07331, and 9 07371.
18. Shut system down.	Valve off the exit gas line from the dissolver, open drain line, and add nitrogen (see Fig. III-9) to force the solution into the hot waste line. The wash dissolver is washed with a small amount of H_2O (forced into the hot waste line). Never allow the dissolver to cool before it is empty because the contents will solidify.

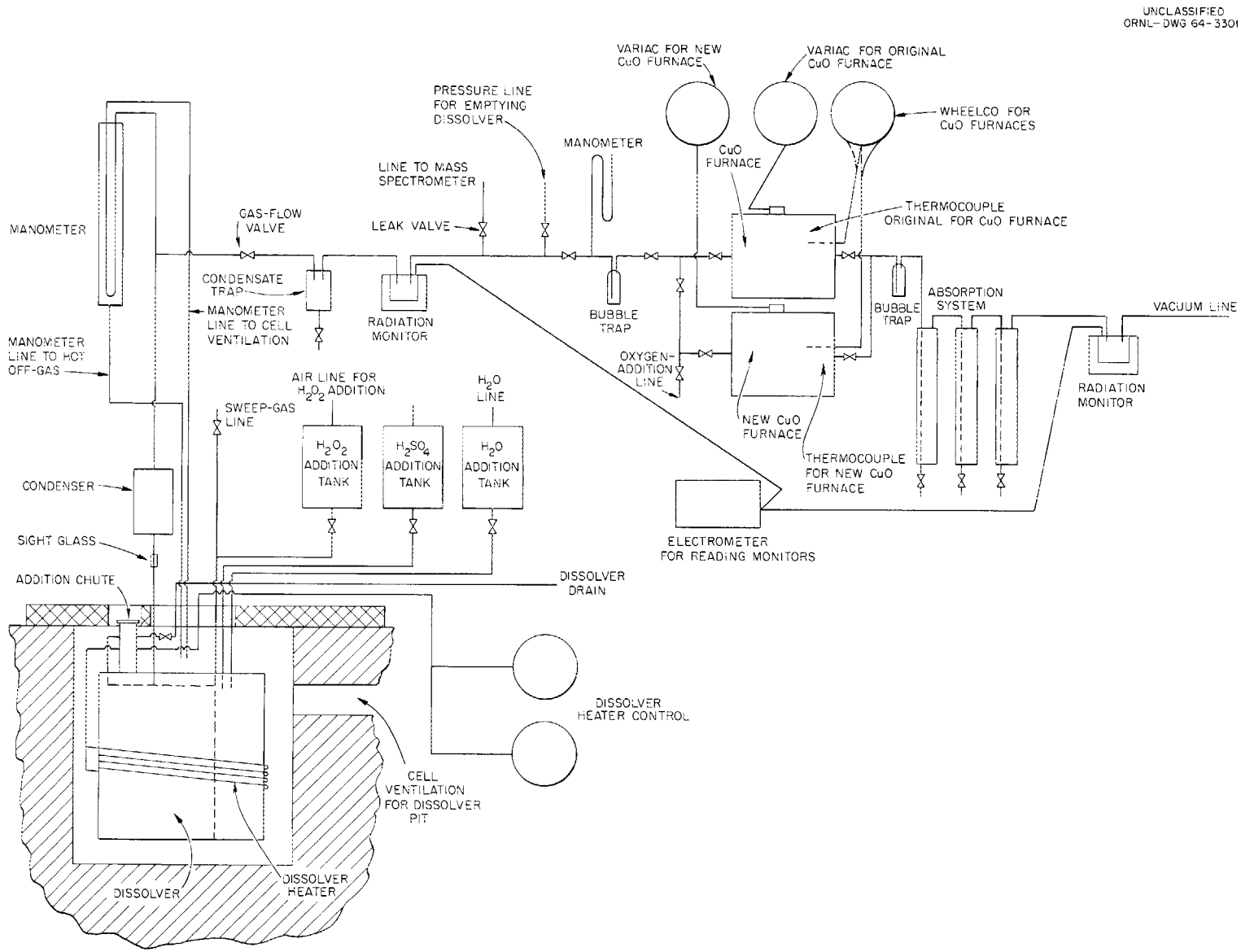

Fig. III-9. Flow Diagram for ^{14}C Purification.

CESIUM-134

Production method:	$^{133}Cs(n,\gamma)^{134}Cs$	Half-life:	2.07 years
Cross section:	32.6 barns	Radiations:	
Target:	CsCl	Beta	Gamma[1]
Target weight:	100 mg	0.09 (25%)	0.561
Neutron flux:	2×10^{14} neutrons cm^{-2} sec^{-1}	0.648 (75%)	0.794
			1.365 (weak)
Irradiation time:	5 years	Processing facility and shielding required: manipulator cell or hot hood equipped with hot off-gas facilities, 4 in. lead equivalent	
Reactor yield:	7 curies		
Processing yield:	>95%		
Radiochemical purity:	>98%		

1. **Prepare equipment.**	Hot off-gas scrubber unit (Fig. III-3) 20-ml ion exchange column (Fig. III-4) 100-ml product bottle Three 150-ml Pyrex beakers
2. **Remove CsCl target from irradiation can and place in beaker containing ~10 ml of distilled H_2O.**	See opening procedure, p. 12.
3. **Add ~5 ml of 16 *M* HNO_3, evaporate to near dryness, and take up in 50 ml of distilled H_2O.**	Treatment removes a portion of ^{36}Cl as HCl and oxidizes ^{35}S to sulfate.
4. **Prepare anion exchange column containing ~20 ml Dowex 2, conditioned with 6 *M* HCl and washed with H_2O until neutral.**	
5. **Pass solution obtained through the column. Wash ^{134}Cs activity from column with 25 ml of H_2O.**	Sulfur-35 remains on column; ^{134}Cs passes through column.
6. **Evaporate column effluent and washings to near dryness, add 10 ml of 16 *M* HNO_3, and evaporate solution to dryness under hot off-gas scrubber assembly.**	This step removes traces of ^{36}Cl and organic material introduced from the ion exchange resin.
7. **Take up in 10 ml of 12 *M* HCl and evaporate to dryness. Repeat step.**	Nitrate is converted to chloride.
8. **Take up in 50 ml of 1 *M* HCl and transfer to product bottle.**	Solution should be clear and water-white.
9. **Sample and analyze for:** **Molarity of HCl** **Heavy metals** **Total solids** **^{134}Cs concentration** **Nonvolatile matter** **Radiochemical purity**	Refer to *ORNL Master Analytical Manual* (TID-7015), procedure No. 9 0733193.

CHLORINE-36

Production method:	$^{35}Cl(n,\gamma)^{36}Cl$	Half-life:	3.08×10^5 years
Cross section:	45 barns	Radiations:	
Target:	KCl	Beta	Gamma
Target weight	117 g	0.714	None
Neutron flux:	1×10^{13} neutrons cm^{-2} sec^{-1}	Processing facility and shielding required: manipulator cell, 4 in. lead; hot hood	
Irradiation time:	9 months		
Reactor yield:	3.7 mc		
Processing yield:	>90%		
Radiochemical purity:	>99%		

1. **Prepare equipment.**	2- to 3-liter distillation equipment (Fig. III-2) Ion exchange column (Fig. III-4) 600-ml Pyrex beaker
2. **Open irradiation can and remove sample.**	See opening procedure, p. 12.
3. **Transfer irradiated sample into beaker and dissolve in ~200 ml of distilled H_2O.**	If $^{38,39}Ar$ is to be recovered, the dissolution should be carried out in a closed system. See ^{37}Ar procedure.
4. **Dilute to 1 liter with distilled H_2O before loading solution on ion exchange column.**	
5. **Prepare ion exchange column with Amberlite IR-120 resin by washing column with 6 *M* HCl followed by a water wash until column effluent is neutral.**	Column should contain ~50% excess resin capacity.
6. **Transfer KCl-H_2O solution into head flask and adjust column flow rate to ~1 ml/min.**	Potassium ions remain on column; ^{36}Cl and ^{35}S pass through column as H_2SO_4 and HCl.
7. **Wash column with 1 liter of H_2O.**	This step ensures complete removal of ^{36}Cl and ^{35}S.
8. **Place effluents from steps 6 and 7 into distillation equipment.**	
9. **Heat flask. Discard distillate until HCl appears (in distillate).**	Removal of HCl is determined by testing with litmus paper.
10. **After acid appears in distillate, continue distillation until no more than 0.5 ml remains in boiling flask.**	Removal of last traces of HCl without loss of H_2SO_4 is attempted in this step. The flask therefore should not be permitted to become dry.
11. **Sample distillate for ^{36}Cl and analyze for:** **Total solids** **Molarity of HCl** **Radiochemical purity** **Heavy metals** **^{36}Cl concentration**	Refer to *ORNL Master Analytical Manual* (TID-7015), procedure No. 9 0733201.

CHROMIUM-51

Production method:	$^{50}Cr(n,\gamma)^{51}Cr$	Half-life:	27.8 days		
Cross section:	17 barns	Radiations:			
Target:	Chromium metal enriched to 98% ^{50}Cr	Beta	Gamma	Others	
		None	0.32 (~8%)	EC	
Target weight:	15 mg	Processing facility and shielding required: manipulator cell, ~2 in. lead equivalent			
Neutron flux:	2×10^{14} neutrons cm^{-2} sec^{-1}				
Irradiation time:	26 weeks				
Reactor yield:	11 curies				
Processing yield:	>95%				
Radiochemical purity:	>99%				

---

1. Prepare equipment.	Hot off-gas scrubber unit (Fig. III-3) 150-ml Pyrex beaker 3-in. fine sintered-glass filter 100-ml product bottle
2. Open irradiation can and transfer target material into a beaker placed under hot off-gas scrubber assembly.	See opening procedure, p. 12.
3. Dissolve target material in a minimum amount of 12 *M* HCl.	Low heat will increase rate of dissolution.
4. Filter.	Filter out any solids that do not dissolve. Use fine sintered-glass filter.
5. Adjust volume to 50 ml of 1 *M* HCl and transfer to product bottle.	Solution should be clear green.
6. Sample and analyze for: **Total solids** **Molarity of HCl** **^{51}Cr concentration** **Radiochemical purity**	Refer to *ORNL Master Analytical Manual* (TID-7015), procedure No. 9 0733211.

COBALT-58

Production method:	$^{58}Ni(n,p)^{58}Co$	Half-life: 71.3 days		
Cross section:	0.092 barn	Radiations:		
Target:	Nickel metal	Beta	Gamma	Other
Target weight:	1 g	0.47 β^+ (15%)	0.81 (~100%)	EC (85%)
Neutron flux:	2×10^{14} neutrons cm^{-2} sec^{-1}	Processing facility and shielding required: manipulator cell, ~1 in. lead equivalent		
Irradiation time:	1 year			
Reactor yield:	400 mc			
Processing yield:	>80%			
Radiochemical purity:	^{58}Co >98% ^{60}Co <5%			

1. **Prepare equipment.**	Hot off-gas scrubber unit (Fig. III-3) Quartz evaporation dish Five 150-ml Pyrex beakers 40-ml ion exchange column (Fig. III-4) 100-ml product bottle
2. **Open irradiation can and remove target from ampule.**	See opening procedure, p. 12.
3. **Wash crushed quartz capsule and NiO from Tygon tube into evaporation dish with 12 *M* HCl.**	
4. **Heat to dissolve NiO. Use hot off-gas scrubber assembly.**	Add additional HCl if necessary to dissolve sample.
5. **Dissolve $NiCl_2 \cdot 6\ H_2O$ crystals in 12 *M* HCl.**	Use approximately 100 ml of 12 *M* HCl per gram of nickel; heat if necessary to produce clear solution.
6. **Evaporate $NiCl_2$ solution to dryness and fume with 12 *M* HCl.**	Avoid converting chloride to oxide.
7. **Prepare a Dowex 1 resin column for ^{58}Co separation.**	Use 100-mesh resin, conditioned with 12 *M* HCl. Resin volume should be ~70 ml per gram of nickel in solution.
8. **Pass $NiCl_2$ solution through the resin column; rinse column with 12 *M* HCl until green color is eluted.**	Cobalt-58 remains on column.
9. **Elute ion exchange column with distilled H_2O.**	Check effluent for ^{58}Co activity to determine efficiency of removal from column.
10. **Collect effluent in beaker and evaporate to near dryness under hot off-gas scrubber assembly.**	
11. **Fume residue with 16 *M* HNO_3.**	Organic compounds are destroyed.
12. **Fume with 12 *M* HCl.**	Nitric acid is removed.

13. Dissolve in 50 ml of 1 *M* HCl and transfer to product bottle.

14. Sample and analyze for:
    Molarity of HCl
    ^{58}Co concentration
    Radiochemical purity
    Total solids

Refer to *ORNL Master Analytical Manual* (TID-7015), procedure No. 9 0733225.

COBALT-60

Production method:	$^{59}Co(n,\gamma)^{60}Co$	Half-life:	5.24 years
Cross section:	37 barns	Radiations:	
Target:	Cobalt metal	Beta	Gamma
Target weight:	180 mg	0.306	1.17
Neutron flux:	2×10^{14} neutrons cm^{-2} sec^{-1}		1.33
Irradiation time:	1 year	Processing facility and shielding required: manipulator cell, ~6 in. lead equivalent	
Reactor yield:	2.5 curies		
Processing yield:	>95%		
Radiochemical purity:	>99%		

1. **Prepare equipment.**	Hot off-gas scrubber unit (Fig. III-3) 150-ml Pyrex beaker 100-ml product bottle
2. **Open irradiation can and transfer target material into beaker placed under hot off-gas scrubber assembly.**	See opening procedure, p. 12.
3. **Dissolve target in minimum amount of 12 *M* HCl.**	Heat increases rate of dissolution.
4. **Adjust volume to 50 ml of 1 *M* HCl and transfer to product bottle.**	Product should be clear green.
5. **Sample and analyze for:** **Molarity of HCl** **Total solids** **^{60}Co concentration** **Radiochemical purity**	Refer to *ORNL Master Analytical Manual* (TID-7015), procedure No. 9 0733221.

COPPER-64

Production method:	$^{63}Cu(n,\gamma)^{64}Cu$	Half-life: 12.82 hr		
Cross section:	4.5 barns	Radiations:		
Target:	Copper metal	Beta	Gamma	Other
Target weight:	10 mg	0.571 β^- (39%)	1.34 (weak)	EC (42%)
Neutron flux:	2×10^{14} neutrons cm^{-2} sec^{-1}	0.657 β^+ (19%)		
Irradiation time:	40 hr	Processing facility and shielding required: manipulator cell, ~3 in. lead equivalent		
Reactor yield:	850 mc			
Processing yield:	>95%			
Radiochemical purity:	>98%			

1. **Prepare equipment.**	Hot off-gas scrubber unit (Fig. III-3) 150-ml Pyrex beaker 100-ml product bottle
2. **Open irradiation can and transfer target material into a beaker placed under hot off-gas scrubber assembly.**	See opening procedure, p. 12.
3. **Dissolve copper in ~3.5 ml of 16 *M* HNO_3.**	
4. **Adjust volume to 50 ml of 1 *M* HNO_3 and transfer to product bottle.**	Product solution should be clear blue.
5. **Sample and analyze for:** **Molarity of HNO_3** **Total solids** **^{64}Cu concentration** **Radiochemical purity**	Refer to *ORNL Master Analytical Manual* (TID-7012), procedure No. 9 0733231.

EUROPIUM-152 AND -154

Production method:	$^{151}Eu(n,\gamma)^{152}Eu$ $^{153}Eu(n,\gamma)^{154}Eu$	Half-life:	^{152}Eu 12.7 years ^{154}Eu 16 years
Cross section:	^{151}Eu 7000 barns ^{153}Eu 320 barns	Radiations:	^{152}Eu β 27%, EC 73% ^{154}Eu (see below)
Target:	Eu_2O_3	Isotope	Beta / Gamma[1]
Target weight:	100 mg	^{152}Eu	0.68 (11%) / 1.42 (21%) with EC
Neutron flux:	1×10^{13} neutrons cm^{-2} sec^{-1}		1.00 (1%) 1.46 (15%)
Irradiation time:	6 months	^{154}Eu	0.15 (12%) / 0.123 (35%)
Reactor yield:	^{152}Eu 400 mc ^{154}Eu 200 mc		0.25 (28%) / 0.725 (21%) 0.55 (30%) / 0.998 (14%) 0.83 (20%) / 1.277 (42%) 1.60 (3%) / ~1.6 1.84 (7%)
Processing yield:	>95%		
Radiochemical purity:	>99%		

Processing facility and shielding required: manipulator cell, 6 in. lead equivalent

---

1. **Prepare equipment.**	Hot off-gas scrubber unit (Fig. III-3) 150-ml Pyrex beaker 100-ml product bottle
2. **Open irradiation can, transfer target material into a beaker placed under a hot off-gas scrubber assembly.**	See opening procedure, p. 12.
3. **Dissolve target material in 10 to 12 ml of 12 *M* HCl.**	Heat increases rate of dissolution.
4. **Adjust volume to 50 ml of 1 *M* HCl and transfer to a product bottle.**	Product solution should be clear and water-white.
5. **Sample and analyze for:** **Molarity of HCl** **Total solids** **^{152}Eu concentration** **^{154}Eu concentration** **Radiochemical purity**	Refer to *ORNL Master Analytical Manual* (TID-7015), procedure Nos. 9 0732005, 9 0731000, 9 002302, and 9 0733002.

FISSION PRODUCTS

Production method:	Fission	Half-life:	Mixed
Target:	U-Al alloy	Radiations:	Many energies
Neutron flux:	2×10^{14} neutrons cm^{-2} sec^{-1}	Processing facility and shielding required:	manipulator cell, 8 in. lead equivalent, minimum
Irradiation time:	4 weeks		

1. **Prepare equipment.**	Evaporation flask 500-ml separatory funnel Three 500-ml Pyrex beakers Hot off-gas scrubber unit (Fig. III-3)
2. **To 25-ml uranyl nitrate solution from ^{131}I process, add 25 ml of 30% tributyl phosphate (TBP).**	TBP (30 ml of TBP diluted with 70 ml of CCl_4) is equilibrated to adjust the HNO_3 to ~6 *M* in separatory funnel with manual agitation. See ^{131}I processing procedure.
3. **Extract uranyl nitrate with TBP solution by shaking for ~5 min. Allow phases to settle.**	Plutonium and uranium extract into organic phase. Fission products remain in aqueous phase.
4. **Carefully drain and discard bottom (organic) phase. Wash aqueous phase with 25 ml of CCl_4 and discard wash.**	Wash to remove traces of TBP.
5. **Drain aqueous phase into evaporation flask and evaporate to dryness.**	
6. **Fume twice with 25 ml of concentrated HNO_3.**	Fume to remove organic compounds.
7. **Fume twice with 25 ml of concentrated HCl.**	This step effects conversion to chlorides.
8. **Take up solids in 25 ml of 1.0 *M* HCl.**	Mixed fission products are in solution.
9. **Sample and analyze for:** **Molarity of HCl** **Total activity** **Total solids** **Heavy metals**	Refer to *ORNL Master Analytical Manual* (TID-7015), procedure Nos. 9 002301, 9 0733000, 9 002302, 9 0733001, and 9 0733002.

GALLIUM-72

Production method:	$^{71}Ga(n,\gamma)^{72}Ga$	Half-life:	14.1 hr
Cross section:	5.0 barns	Radiations:	
Target:	Ga_2O_3	Beta	Gamma[1]
Target weight:	100 mg	0.6 (40%)	0.63 (24%)
Neutron flux:	1×10^{13} neutrons cm^{-2} sec^{-1}	0.9 (32%)	0.84 (100%)
		1.5 (11%)	2.21 (33%)
Irradiation time:	60 hr	2.52 (8%)	2.51 (26%)
Reactor yield:	400 mc	3.15 (9%)	
Processing yield:	>90%	Processing facility and shielding required: manipulator cell or hot hood equipped with hot off-gas facility, 2 in. lead equivalent	
Radiochemical purity:	99%		

1. **Prepare equipment.**	Hot off-gas scrubber unit (Fig. III-3) 100-ml product bottle 150-ml Pyrex beaker
2. **Open irradiation can and transfer target material into beaker containing ~10 ml of H_2O placed under hot off-gas scrubber assembly.**	See opening procedure, p. 12.
3. **Dissolve target material in hot 12 *M* HCl.**	An occasional drop of 30% H_2O_2 increases the rate of dissolution of target.
4. **Adjust volume to 50 ml of 1 *M* HCl. Transfer to product bottle.**	Product solution should be clear and water-white.
5. **Sample and analyze for:** **Molarity of HCl** **Total solids** **^{72}Ga concentration** **Radiochemical purity**	Refer to *ORNL Master Analytical Manual* (TID-7015), procedure No. 9 0733311.

GOLD-198

Production method:	$^{197}Au(n,\gamma)\ ^{198}Au$	Half-life:	2.70 days
Cross section:	99 barns	Radiations:	
Target:	Gold metal	Beta	Gamma
Target weight:	50 mg	0.29 (1%)	~0.411 (100%)
Neutron flux:	0.7×10^{13} neutrons $cm^{-2}\ sec^{-1}$	0.97 (99%)	~0.68 (1%)
			~1.09 (0.2%)
Irradiation time:	61 hr	Processing facility and shielding required: manipulator cell, 4 in. lead equivalent	
Reactor yield:	2.9 curies		
Processing yield:	>95%		
Radiochemical purity: ^{198}Au >98% (exclusive of ^{199}Au) ^{199}Au ~5%			

1. **Prepare equipment.**	Hot off-gas scrubber unit (Fig. III-3) 150-ml Pyrex beaker 100-ml product bottle
2. **Open irradiation can and transfer target material into beaker placed under hot off-gas scrubber assembly.**	See opening procedure, p. 12.
3. **Add 3.5 ml of aqua regia. Heat until target is dissolved.**	
4. **Dilute to 50 ml with distilled H_2O and transfer to product bottle.**	Product solution should be clear amber.
5. **Sample and analyze for:** **Molarity of HCl** **Total solids** **^{198}Au concentration** **^{199}Au concentration** **Radiochemical purity**	Refer to *ORNL Master Analytical Manual* (TID-7015), procedure No. 9 0733381.

GOLD-199

Production method:

$$^{198}Pt(n,\gamma)^{199}Pt \xrightarrow[31m]{\beta^-} {}^{199}Au$$

Half-life: 3.14 days

Cross section:	4 barns
Target:	Platinum metal (foil)
Target weight:	100 mg
Neutron flux:	2×10^{14} neutrons cm^{-2} sec^{-1}
Irradiation time:	40 hr
Reactor yield:	150 mc
Processing yield:	>95%

Radiations:

Beta	Gamma
0.250	0.050
0.297	0.159
0.460	0.209

Processing facility and shielding required: manipulator cell, ~3 in. lead equivalent

Radiochemical purity:
^{199}Au >98% (exclusive of ^{198}Au)
^{198}Au <5%

---

1. **Prepare equipment.**	Hot off-gas scrubber unit (Fig. III-3) Magnetic stirrer with three polyethylene-covered stirring bars 100-ml Pyrex beaker Six 150-ml Pyrex beakers Ring stand Three separatory funnel supports Two 125-ml separatory funnels 100-ml product bottle
2. **Open irradiation can and transfer target to beaker placed under hot off-gas scrubber assembly.**	See opening procedure, p. 12.
3. **Cover target material with aqua regia and boil until target is completely dissolved. Decant to remove broken quartz ampule.**	
4. **Evaporate target solution to one drop.**	This removes excess HNO_3.
5. **Adjust volume to ~20 ml of 6 *M* HCl, transfer solution to beaker, and add 20 ml of ethyl acetate.**	
6. **Agitate with magnetic stirrer for 15 min.**	
7. **Transfer to separatory funnel. Separate aqueous and organic portions; save each.**	Gold-199 remains in ethyl acetate layer.
8. **Repeat extraction of aqueous fraction.**	
9. **Combine ethyl acetate layers and transfer them to a clean agitation vessel. Add 20 ml of 6 *M* HCl and agitate for 15 min.**	

10. Transfer to clean separatory funnel and separate organic and aqueous fractions.	
11. Transfer ethyl acetate layers to clean beaker, add 10 ml of distilled H_2O, and evaporate to 0.1 ml.	Use hot off-gas scrubber unit. Evaporation will remove ethyl acetate and leave ^{199}Au in H_2O solution.
12. Cool beaker and fume with aqua regia.	Traces of ethyl acetate are removed.
13. Evaporate to near dryness.	This removes excess acid.
14. Adjust to 50 ml of 1 *M* acid and transfer to product bottle.	Product solution should be water-white.
15. Sample and analyze for: Molarity of HCl Total solids ^{199}Au concentration ^{198}Au concentration Radiochemical purity	Refer to *ORNL Master Analytical Manual* (TID-7015), procedure No. 9 0733332.

HAFNIUM-181

Production method:	$^{180}Hf(n,\gamma)^{181}Hf$	Half-life:	44.6 days
Cross section:	10 barns	Radiations:	
Target:	HfO_2	Beta	Gamma[1]
Target weight:	100 mg	0.408	0.133
Neutron flux:	2×10^{14} neutrons cm^{-2} sec^{-1}		0.344
			0.611
Irradiation time:	150 days	Processing facility and shielding required: manipulator cell, 4 in. lead equivalent	
Reactor yield:	3 curies		
Processing yield:	>95%		
Radiochemical purity:	>98%		

1. **Prepare equipment.**	Hot off-gas scrubber unit (Fig. III-3) 60-mm filter funnel Four 150-ml Pyrex beakers Four Whatman No. 40 filter papers Porcelain boat Tube furnace assembly (Fig. III-10) 100-ml product bottle
2. **Open irradiation can and transfer target to a porcelain boat.**	See opening procedure, p. 12.
3. **Add 20 times the target weight of $KHSO_4$ to sample in boat and fuse at 400°C for ~2 hr. Allow furnace to cool.**	
4. **Submerge boat in 50 ml of 3 *M* HCl in a beaker. Heat on hot plate, agitate with glass stirring rod until all melt has been dissolved, and rinse boat with a few milliliters of 3 *M* HCl.**	
5. **Add concentrated NH_4OH dropwise with agitation until all hafnium has been precipitated as $Hf(OH)_4$.**	Solution should have a pH of 8 to 9.
6. **Filter $Hf(OH)_4$ on paper. Check filtrate for ^{181}Hf activity. Discard or reprocess as indicated by the concentration of ^{181}Hf.**	Hafnium-181 will remain on the filter paper.
7. **Wash $Hf(OH)_4$ several times with 50 ml of hot distilled H_2O. Discard filtrate.**	Washing precipitate at this point removes traces of $KHSO_4$ and NH_4OH.
8. **Dissolve wet hafnium precipitate from the filter with 9 *M* HCl.**	
9. **Transfer dissolved precipitate to beaker and evaporate to ~10 ml under hot off-gas scrubber assembly.**	Evaporation reduces the acid concentration.
10. **Adjust volume to 50 ml of 1 *M* HCl and transfer to product bottle.**	Product solution should be clear and water-white.

11. **Sample and analyze for:**
    Molarity of HCl
    Total solids
    ^{181}Hf concentration
    ^{175}Hf concentration
    Radiochemical purity

Refer to *ORNL Master Analytical Manual* (TID-7015), procedure No. 9 0733341.

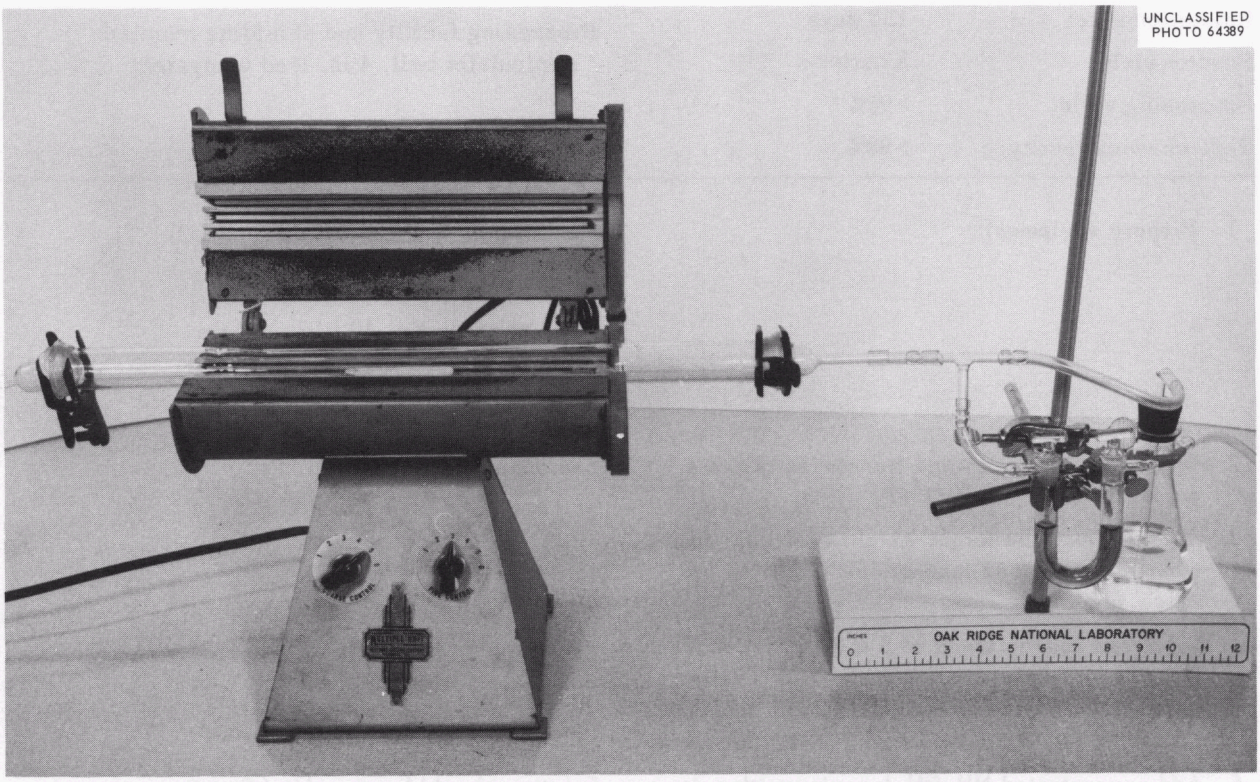

Fig. III-10. Tube Furnace Assembly with Scrubber.

HYDROGEN-3

(Purification and Loading)

Production method:	$^{6}Li(n,\alpha)^{3}H$	Half-life:	12.46 years
Cross section:	945 barns	Radiations:	
Radiochemical purity:	>99%	Beta	Gamma
		0.01795	None

Processing facility: hot hood, isolated from general laboratory area

---

Source of Material

Bulk quantities of ^{3}H are normally received in 10-liter cylinders and require purification to remove traces of air and water vapor.

Purification and Loading

1. **Check fixed process equipment (Fig. III-11).**	
2. **Evacuate system to a pressure of <1 μ to check for leaks.**	If system holds this pressure for 5 min, it is considered leak free.
3. **Isolate vacuum pump and introduce ^{3}H from bulk tank into uranium trap.**	This step activates the uranium trap.
4. **Close valve to bulk cylinder.**	
5. **Heat uranium trap to 450 to 500°C until sorption ceases.**	Pressure of system decreases and remains constant at completion of sorption.
6. **Cool trap and repeat steps 3 to 5.**	
7. **With trap at room temperature, connect 1-cm^{3} sample ampule at load-out station and evacuate complete system.**	
8. **Isolate vacuum pump and heat trap until system is at 3 mm pressure to collect sample for analysis.**	Mass assay of sample should indicate a ^{3}H purity of >99%. If purity is not at least 99%, repeat steps 1 to 8.
9. **Calculate loading pressure for shipping cylinder.**	See step 11 of ^{85}Kr procedure.
10. **Connect shipping container and sample ampule. Valve off uranium trap and pump shipping cylinder and load out system to a pressure of <1 μ.**	See Section IV for description of shipping container. Trap must be cool.
11. **Valve off vacuum system.**	
12. **Open valve to uranium trap and heat trap until calculated pressure in cylinder is obtained.**	

13. Close cylinder and sample ampule valve and allow uranium trap to cool.	This will resorb residual ^3H in system to a pressure of $\sim 100\ \mu$.
14. Pump residual gas in system to hot off-gas and close trap valve.	Trap must be cool.
15. Disconnect shipping cylinder and sample ampule.	Perform mass spectrometric analysis of sample.
16. Place protective cap on shipping container and probe protector cap for leakage.	Wait 4 hr before leak test.

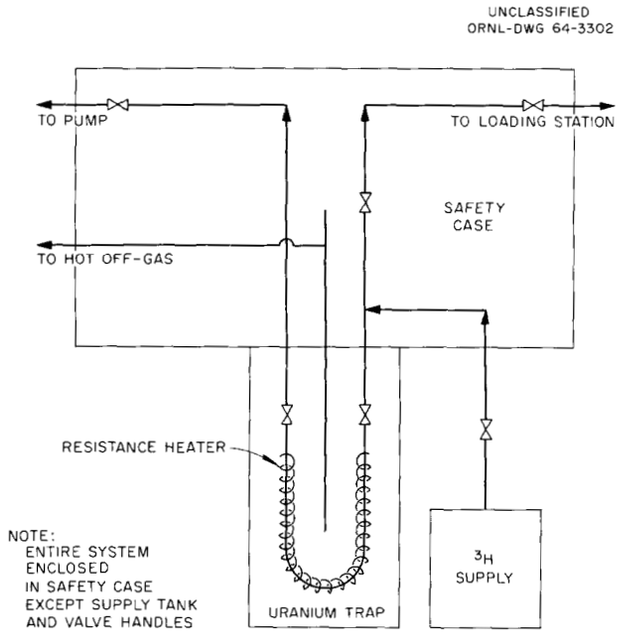

Fig. III-11. Flow Diagram for Tritium Purification.

INDIUM-114m AND -114

Production method:

$$^{113}In(n,\gamma)^{114m}In \xrightarrow[50d]{IT} {}^{114}In$$

Cross section:	8 barns
Target:	Indium metal
Target weight:	100 mg
Neutron flux:	2×10^{14} neutrons cm^{-2} sec^{-1}
Irradiation time:	7 weeks
Reactor yield:	600 mc (in equilibrium with ^{114}In)
Processing yield:	>90%
Radiochemical purity:	>98%

Half-life: ^{114m}In 50.0 days
^{114}In 72 sec

Radiations:

Isotope	Beta	Gamma[1]	Other
^{114m}In	None	0.190	IT
^{114}In	1.984 β^- (97%)	0.552	EC (3%)
	~1 β^+ (~0.01%)	0.722	
		1.30	

Processing facility and shielding required: manipulator cell, 2 in. lead equivalent

---

1. Prepare equipment.	Hot off-gas scrubber unit (Fig. III-3) 150-ml Pyrex beaker 100-ml product bottle
2. Open irradiation can and transfer target to beaker placed under hot off-gas scrubber assembly.	See opening procedure, p. 12.
3. Add 5 to 10 ml of 12 *M* HCl and heat to dissolve target.	Do not boil the solution.
4. Dilute contents of beaker with distilled H_2O to volume of 50 ml (~1 *M* HCl). Transfer to product bottle.	Solution should be clear and water-white.
5. Sample and analyze for: **Molarity of HCl** **^{114m}In concentration** **Radiochemical purity** **Total solids**	Refer to *ORNL Master Analytical Manual* (TID-7015), procedure No. 9 0733381.

IODINE-125

Production method:

$$^{124}Xe(n,\gamma)^{125}Xe \xrightarrow[18h]{EC} {}^{125}I$$

Cross section:	74 barns[5]
Target:	Xenon gas
Target weight:	~3 g
Neutron flux:	2×10^{14} neutrons cm^{-2} sec^{-1}
Irradiation time:	3 weeks
Reactor yield:	~2 curies
Processing yield:	>95%
Radiochemical purity:	^{125}I, 99.9% (exclusive of ^{126}I) ^{126}I, <1% (after 2 to 3 month's decay)

Half-life: 57.4 days

Radiations:

Beta	Gamma	X Ray
None	0.0354	0.0274

Processing facility and shielding required: manipulator cell, 3 in. lead equivalent

[5]Owing to the high value of the resonance integral (~1300 barns), the effective cross section for ^{125}I production in the ORR is ~200 barns instead of the 74 barns usually stated in the literature.

1. **Prepare equipment.**	Distillation equipment with reflux condenser (Fig. III-2) 1-liter Dewar flask Hot plate or heating mantle Vise Tubing cutter 200-ml product bottle
2. **Prepare irradiation can for opening by cooling to liquid-nitrogen temperature. Place irradiation can in Dewar flask containing liquid nitrogen to freeze iodine to inside of the irradiation can walls and to reduce can pressure.**	Freezing time is ~5 min.
3. **Place can in vise and open with a tubing cutter. Immediately place lid into a beaker of 0.1 *M* NaOH solution.**	Solution should be sufficient to cover surface of lid. **Caution:** It may be necessary to refreeze can if frost on outside of can shows signs of melting during opening operation.
4. **Fill open can with 0.1 *M* NaOH.**	Keep can at low temperature (surface frost present) until NaOH solution has been added.
5. **Allow caustic solution to etch the aluminum inner walls of the irradiation can, dissolving the inside surface layer.**	Approximately 1 hr is required to complete this dissolution.
6. **Empty caustic from cans and rinse cans with H_2O. Combine the caustic solutions and H_2O rinse into a single flask of appropriate size.**	Caustic solution contains ^{125}I as NaI. Volume of solution should not exceed ~50% of flask capacity.

7. Add 0.2 *M* $KMnO_4$ solution in excess as indicated by slight purple color in the caustic solution.	
8. Make solution 1 *M* in H_2SO_4 by adding 18 *M* H_2SO_4 dropwise. Boil contents of flask for ~10 min to oxidize NaI to $NaIO_3$.	Dropwise addition of 18 *M* H_2SO_4 to caustic solution prevents excess heating and boiling of solution.
9. Discard any distillate that collects in product receiver. Rinse receiver with water.	
10. Add 4 ml of 6% H_2SO_3 to product receiver flask.	
11. Add H_3PO_3 dropwise to boiling flask until $KMnO_4$ color disappears and solution becomes water-white.	This reduces iodate to elemental iodine.
12. Heat flask until distillate appears in product receiver.	
13. Add H_2O_2 dropwise to boiling flask.	This oxidizes iodide to iodine, and the oxygen produced sparges elemental iodine from the boiling flask.
14. Continue distillation and H_2O_2 addition until ~150 ml collects in product receiver.	
15. Transfer distillate to a 200-ml product bottle and neutralize to pH 8 with saturated $NaHCO_3$ solution.	
16. Continue distillation into new H_2SO_3 until a second 150 ml is collected (see step 10). Neutralize as in step 15 and analyze for ^{125}I.	
17. Remove sample of solution from boiling flask. Neutralize and test to determine whether or not all ^{125}I has been removed.	
18. Sample neutralized solution from step 15 and analyze for: Total solids ^{125}I concentration ^{126}I concentration Radiochemical purity pH	Refer to *ORNL Master Analytical Manual* (TID-7015), procedure Nos. 9 0731000, 9 002301, 9 002302, 9 0733002, and 9 0732005.

IODINE-129

Production method:	Fission; obtained as a by-product of fuel element processing	Half-life:	1.56×10^7 years
		Radiations:	
Fission yield:	1%	Beta	Gamma
		0.12	0.039
Radiochemical purity:	>99% ~75% total iodine	Processing facility:	hot hood

Source of Material

Berl saddles, treated with $AgNO_3$ and packed in iodine scrubbers, are used to collect iodine generated during fuel element processing. A decay period of ~4 years is required for decay of ^{131}I, ^{130}I, ^{126}I, ^{125}I, and ^{133}I.

Processing

1. Prepare equipment.	Two 5-liter and one 1-liter distillation systems (Fig. III-2) 55-gal stainless steel drum Sample bottle
2. Wash saddles twice with hot H_2O.	This removes excess $AgNO_3$. If quantity of saddles is large, use a 55-gal stainless steel drum.
3. Cover saddles with solution of 1 *M* NaOH and 0.05 *M* Na_2S.	Silver is converted to Ag_2S and the iodine to NaI.
4. Digest for 48 hr at room temperature. Drain leach solution from saddles and rinse once with H_2O.	
5. Combine leach and wash solutions.	
6. Examine 50 saddles for ^{129}I by counting with thin-window GM counter. Discard saddles if >99% of ^{129}I has been removed.	This determines the efficiency of iodine removal.
7. Vacuum filter leach solution through a sintered-glass filter.	This removes Ag_2S.
8. Make solution containing ^{129}I 0.5 *M* with H_2SO_4.	
9. Boil solution in batches in 5-liter, 3-neck boiling flask with distillate condenser until entire volume has been reduced to ~2½ liters.	
10. Transfer solution to distillation equipment (5-liter boiling flask). Add 50 ml of 1 *M* NaOH to distillate receiver.	
11. Add to boiling flask 10 ml of 0.2 *M* $NaHSO_3$ solution per liter of leach solution, plus 6 drops of 3% ammonium molybdate per liter.	This reduces any iodate to iodide.

12. Heat until distillate forms in receiver.	Elemental sulfur may appear as a precipitate in the boiling flask and in distillate.
13. Add H_2O_2 dropwise to boiling flask.	The oxygen produced sparges elemental iodine from boiling flask.
14. Distil with H_2O_2 additions until solution in boiling flask becomes clear.	Thirty minutes to 1 hr is required for iodine removal.
15. Sample solution in boiling flask to determine completeness of iodine removal.	
16. Collect distillate fraction of NaI in NaOH solution and filter through a sintered-glass filter to remove elemental sulfur.	
17. Transfer the ^{129}I solution to a clean distillation (1-liter) system, fitted with a 100-ml distillate receiver containing 10 ml of 6% H_2SO_3.	
18. Add 1 *M* $KMnO_4$ solution until solution in boiling flask has a slight purple color.	
19. Adjust boiling flask content to 0.5 *M* H_2SO_4 by adding 4.5 *M* H_2SO_4.	
20. Heat flask, distil ~10 ml of solution from boiling flask, and discard.	This removes volatile components other than iodine from boiling flask.
21. Add H_3PO_3 dropwise until solution in boiling flask becomes water-white.	This reduces iodate to iodide.
22. Continue distillation with the dropwise addition of 15% H_2O_2 until solution in flask becomes water-white.	This oxidizes iodide to iodine, and the oxygen produced sparges elemental iodine from the boiling flask.
23. Collect distillate in a sample bottle and adjust to pH 8–9 with $NaHCO_3$.	
24. Sample and analyze for: Total solids Total iodine ^{129}I concentration Radiochemical purity	Refer to *ORNL Master Analytical Manual* (TID-7015), procedure Nos. 9 073100, 9 002301, 9 0733000, 9 002302, 9 0733001, and 9 0733002.

IODINE-130

Production method:	$^{129}I(n,\gamma)^{130}I$	Half-life:	12.5 hr
Cross section:	31 barns	Radiations:	
Target:	Elemental ^{129}I	Beta	Gamma
Target weight:	20 mg	0.59 (54%)	0.409 (30%)
Neutron flux:	2×10^{14} neutrons cm^{-2} sec^{-1}	1.02 (46%)	0.528 (100%)
			0.660 (90%)
Irradiation time:	61 hr		0.744 (80%)
Reactor yield:	250 mc		1.15 (40%)
Processing yield:	>90%	Processing facility and shielding required: manipulator cell, 3 in. lead equivalent	
Radiochemical purity:	>99.9%		

---

1. **Prepare equipment.**	150-ml Pyrex beaker 100-ml product bottle
2. **Open irradiation can and remove quartz ampule. Add 8 to 10 ml of 0.01 *M* NaOH solution to Tygon tube and follow procedure for breaking quartz ampule.**	See opening procedure, p. 12.
3. **Remove cork stoppers after target material has dissolved in NaOH solution.**	Target material, elemental ^{129}I, is volatile at room temperature. Allow ~5 min for complete dissolution.
4. **Transfer ^{130}I solution and broken ampule into a beaker. Rinse Tygon tube with two 10-ml portions of distilled H_2O.**	
5. **Decant ^{130}I solution from quartz ampule into product bottle, rinse beaker with two 10-ml portions of distilled H_2O, and adjust volume to 50 ml with distilled H_2O.**	Product solution should be clear and water-white.
6. **Sample and analyze for:** **Total solids** **Heavy metals** **Molarity of NaOH** **^{130}I concentration** **^{129}I concentration** **Radiochemical purity**	Refer to *ORNL Master Analytical Manual* (TID-7015), procedure Nos. 9 0731000, 9 0732004, 9 0732005, 9 0733000, 9 0733001, and 9 0733002.

IODINE-131

Production method:	Fission	Half-life	8.05 days
Fission yield:	2.9%	Radiations:	
Target:	U-Al alloy	Beta	Gamma[1]
Target weight:	5 g	0.250 (2.8%)	0.080 (2.2%)
Neutron flux:	$\sim 2 \times 10^{14}$ neutrons cm^{-2} sec^{-1}	0.335 (9.3%)	0.364 (80%)
		0.608 (87.2%)	0.637 (9%)
		0.815 (0.7%)	0.722 (3%)
Irradiation time:	21 days	Processing facility and shielding required: cell with remote controls on process vessels, 6–8 in. lead equivalent	
Reactor yield:	~200 curies		
Processing yield:	50 to 75%		
Radiochemical purity: ^{131}I >99.9% (exclusive of ^{133}I) ^{133}I <2%			

Source of Material

An Al-clad fuel cylinder composed of 5 g of 93% ^{235}U alloyed with 31 g of aluminum (9 in. long by 1.74 in. OD; weight, 109 g) is irradiated at a flux of $\sim 2 \times 10^{14}$ neutrons cm^{-2} sec^{-1} for 21 days to produce ~200 curies of ^{131}I. This procedure is for the recovery of ^{131}I from the irradiated fuel cylinder at the ORNL iodine facility. The irradiated fuel cylinder is transferred from the ORR to the iodine processing facility in a shielded transfer container.

Processing

1. Prepare equipment.

   Fixed process equipment (Fig. III-12). The shielded cell has remote controls on the process vessels. Hot off-gas lines and cell ventilation are equipped with caustic scrubbers, CWS filters, and charcoal filters.

2. Charge scrubbers with ~10% NaOH and bubble cap column with ~15% NaOH.
3. Check scrubber caustic circulation pump and circulate caustic through off-gas scrubber.
4. Introduce irradiated uranium cylinder into dissolver tank.
5. Introduce chilled H_2O (10°C) to dissolver reflux condenser, catch-tank cooling coil, catch-tank condenser, and bubble-cap column.
6. Add caustic solution (250 g NaOH in 1 liter of H_2O) to dissolver.

7. Heat dissolver to ~105°C for ~1 hr.	This dissolves the aluminum on cylinder and exposes the uranium.
8. Stop chilled H_2O flow to dissolver reflux condenser and introduce steam.	This prevents reflux of iodine obtained in next step.
9. Add 8 *M* HNO_3 slowly to dissolver until iodine is liberated, as noted on ionization chamber at catch tank.	Nitric acid is added to neutralize excess caustic and to acidify solution from which the elemental iodine is distilled into catch tank.
10. Continue distillation until no additional iodine is distilled into catch tank, as indicated by ionization chamber at catch tank.	Addition of H_2O_2 increases the rate of distillation of iodine. Volume is maintained at 2 liters as noted on liquid-level gage.
11. Cool dissolver and reflux condenser.	
12. Transfer condensate containing ^{131}I from catch tank to second distillation system.	
13. Charge distillate receiver with 200 ml of H_2O containing 30 g of NaOH.	
14. Add 2.5 liters of ~30% H_2O_2 and 130 ml of 70% HNO_3 to the still.	Nitric acid neutralizes caustic and acidifies solution from which iodine is distilled; H_2O_2 oxidizes iodide to iodine and provides sweep gas for removal of iodine.
15. With cooling H_2O on still condenser, distil iodine into distillate receiver.	Note completion of ^{131}I removal by ion chamber readings at distillate receiver.
16. Transfer iodine solution to evaporator and evaporate to 1 liter.	Iodine remains in the caustic solution in evaporator.
17. Transfer the evaporated solution to glass still for final purification.	
18. Prepare the distillate receiver by adding 6 ml of 6% H_2SO_3.	
19. To the distillation flask, add saturated $KMnO_4$ solution until an excess is noted by pink color, and then add 140 ml of 21 *M* H_2SO_4.	Add H_2SO_4 slowly to prevent local heating. Iodide is oxidized to iodate. The $KMnO_4$ color should persist after the H_2SO_4 addition.
20. Distil ~400 ml and discard.	This removes traces of HNO_3.
21. Recharge distillate receiver with 6 ml of 6% H_2SO_3. Slowly add concentrated H_3PO_3 to flask until $KMnO_4$ color is cleared; then add 30% H_2O_2 dropwise during the distillation.	Iodate is reduced to elemental iodine and is distilled into the H_2SO_3 in the distillate receiver. Collect approximately 100 ml of distillate.
22. Neutralize solution with $NaHCO_3$ and adjust to a pH of ~ 8 in the distillate receiver. Transfer to product bottle.	This neutralizes excess H_2SO_3 and the H_2SO_4 produced by oxidation of H_2SO_3 The purpose of this is to provide a basic solution to protect against later accidental acidification and release of I_2 by air or radiation decomposition (of H_2O) oxidation. Higher pH's shift iodine equilibrium toward IO_3^- formation.

23. **Sample and analyze for:**
    ^{131}I concentration
    ^{133}I concentration
    Heavy metals
    Iodide/iodate ratio
    Total reducing agents
    pH
    Radiochemical purity

Refer to *ORNL Master Analytical Manual* (TID-7015), procedure Nos. 9 0733391, 9 0733392, 9 0733393, and 9 0733394.

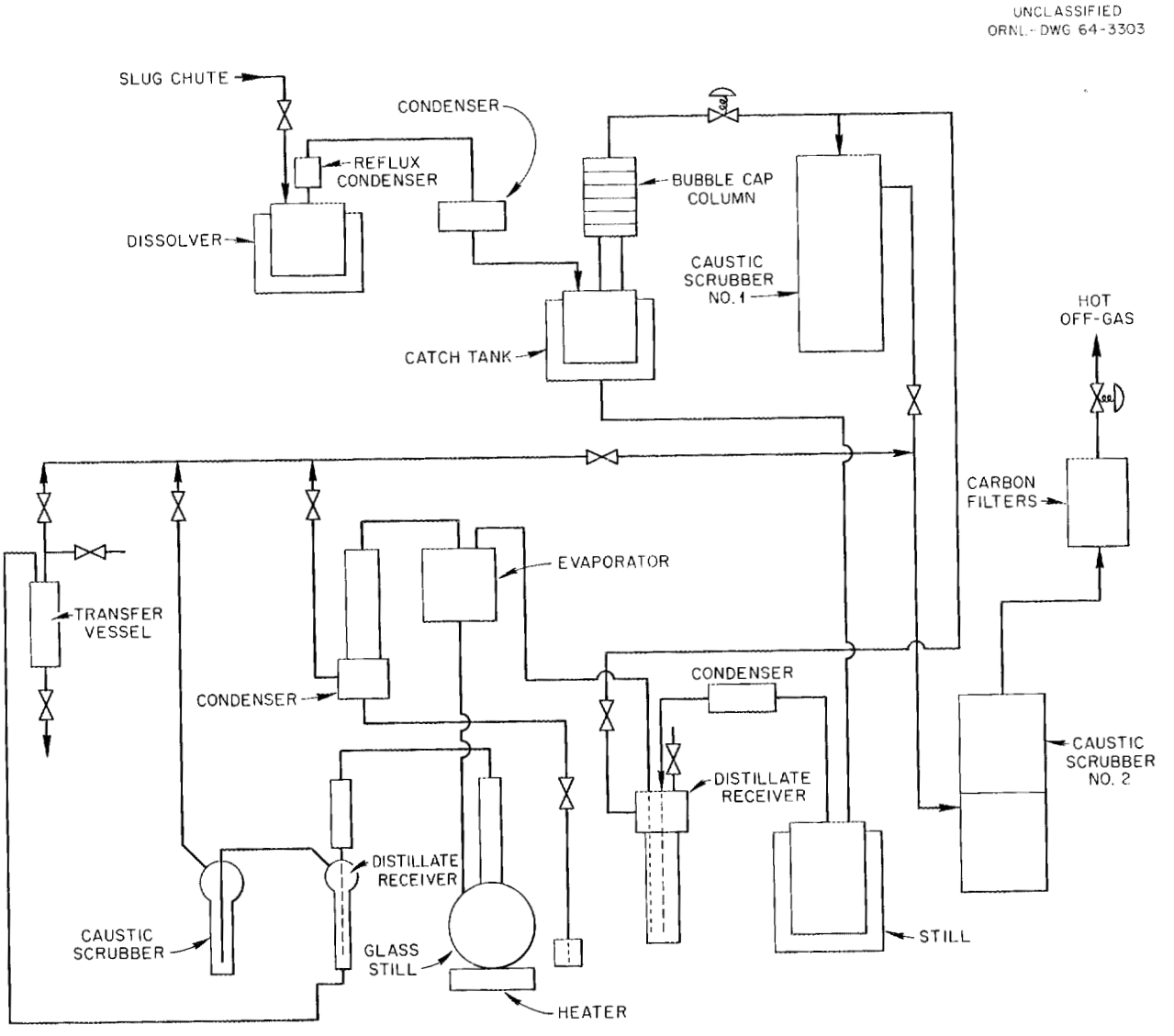

Fig. III-12. Flow Diagram for ^{131}I Purification.

IRIDIUM-192

Production method:	$^{191}Ir(n,\gamma)^{192}Ir$	Half-life: 74.2 days		
Cross section:	1000 barns	Radiations:		
Target:	Iridium metal	Beta	Gamma[1]	Other
Target weight:	500 mg	0.100 (<0.5%)	0.136	EC (3.5%)
Neutron flux:	2×10^{14} neutrons cm^{-2} sec^{-1}	0.257 (7%)	0.468	no β^+
		0.537 (41%)	0.613	
Irradiation time:	4 weeks	0.673 (48%)	1.157 (weak)	
Reactor yield:	200 curies	Processing facility and shielding required: manipulator cell, 6 in. lead equivalent		
Processing yield:	~50%			
Radiochemical purity:	>98% (exclusive of ^{194}Ir)			

1. **Prepare equipment.**	Tube furnace assembly (Fig. III-10) Fine sintered-glass filter 150-ml Pyrex beaker 100-ml product bottle Porcelain boat
2. **Open irradiation can and transfer iridium into a small porcelain boat.**	See opening procedure, p. 12.
3. **Cover iridium with dry NaCl (~5 g) and place in hot zone of furnace tube.**	
4. **Heat to >800°C and introduce dry chlorine into tube for ~8 hr. Cool furnace.**	This converts iridium and NaCl to Na_2IrCl_6.
5. **Dissolve contents of boat in 50 ml of H_2O.**	Solution should be dark red.
6. **Filter solution through glass filter and transfer to product bottle.**	Approximately 50% of the iridium metal does not react to fusion treatment.
7. **Sample and analyze for:** **Total solids** **Molarity of HCl** **^{192}Ir concentration** **Radiochemical purity**	Refer to *ORNL Master Analytical Manual* (TID-7015), procedure No. 9 0733401.

IRIDIUM-194

Production method:	$^{193}Ir(n,\gamma)^{194}Ir$	Half-life: 19.0 hr	
Cross section:	120 barns	Radiations:	
Target:	Iridium metal	Beta	Gamma[1]
Target weight:	100 mg	0.430 (~8%)	0.293
Neutron flux:	1×10^{13} neutrons cm^{-2} sec^{-1}	0.975 (9.7%)	0.643
		1.905 (15%)	1.180
Irradiation time:	60 hr	2.236 (66%)	2.048 (weak)
Reactor yield:	1.2 curies	Processing facility and shielding required: manipulator cell, 6 in. lead equivalent	
Processing yield:	~50%		
Radiochemical purity:	98% (exclusive of ^{192}Ir daughter)		

1. Prepare equipment and process for ^{194}Ir.	Equipment and procedure are identical to those for ^{192}Ir. Only the surface of the iridium foil will be converted by the fusion and chlorine treatment.
2. Sample and analyze for: **Molarity of HCl** **^{194}Ir concentration** **Total solids** **Radiochemical purity**	Refer to *ORNL Master Analytical Manual* (TID-7015), procedure No. 9 0733402.

IRON-55 AND -59

Production method:	$^{54}Fe(n,\gamma)^{55}Fe$ $^{58}Fe(n,\gamma)^{59}Fe$	Half-life:	^{55}Fe 2.94 years ^{59}Fe 44.3 days
Cross section:	^{55}Fe 2.5 barns ^{59}Fe 1.0 barns	Radiations:	
Target:	Fe_2O_3		
Target weight:	300 mg		
Neutron flux:	2×10^{14} neutrons cm^{-2} sec^{-1}		
Irradiation time:	7 weeks		
Reactor yield:	^{55}Fe 250 mc ^{59}Fe 55 mc		
Processing yield:	>95%	Processing facility and shielding required: manipulator cell, 3 in. lead equivalent	
Radiochemical purity:	>99%		

Isotope	Beta	Gamma	Other
^{55}Fe	None	None	EC (emits characteristic Mn x ray of 5.9 kev)
^{59}Fe	0.271 (46%)	0.191	None
	0.462 (54%)	1.098	
	1.560 (0.3%)	1.289	

1. **Prepare equipment.**	Hot off-gas scrubber unit (Fig. III-3) 50-ml separatory funnel 150-ml Pyrex beaker Stirrer, electric or air 150-ml Vycor beaker 100-ml product bottle Agitator vessel
2. **Open irradiation can and transfer target material into 150-ml Pyrex beaker placed under hot off-gas assembly.**	See opening procedure, p. 12.
3. **Dissolve target in minimum amount of 12 *M* HCl and adjust acid concentration to ~9 *M* HCl.**	
4. **Add a few drops of 16 *M* HNO_3.**	This is to assure that all of the iron is in Fe^{3+} state.
5. **Transfer HCl solution to agitator vessel and add equal amount of dichlorodiethyl ether which has been equilibrated with 9 *M* HCl.**	
6. **Agitate for 15 min and transfer to separatory funnel. Allow ~5 min for layers to separate.**	
7. **Separate ether and HCl layers.**	Hydrochloric acid layer will be on top and ether on bottom.
8. **Transfer HCl layer to agitator vessel and add equal amount of dichlorodiethyl ether.**	A second extraction is necessary to remove all $^{55,59}Fe$.
9. **Agitate for 15 min and transfer to separatory funnel. Allow 5 min for layers to separate.**	
10. **Transfer ether layers to agitator vessel and add 50 ml of distilled H_2O.**	Iron will extract into H_2O.

11. Agitate for 15 min and transfer to separatory funnel. Allow 5 min for layers to separate.
12. Check ether layer for activity. If present, make second H_2O extraction.
13. Separate layers. Transfer H_2O layer to clean 150-ml Vycor beaker and discard ether layer.
14. Evaporate solution in Vycor beaker to near dryness under hot off-gas assembly.
15. Fume with 16 *M* HNO_3. — This destroys organic compounds.
16. Fume twice with 12 *M* HCl. — This removes nitric acid.
17. Adjust volume to 50 ml of 1 *M* HCl and transfer to product bottle. — Product should be clear and yellow.
18. Sample and analyze for: — Refer to *ORNL Master Analytical Manual* (TID-7015), procedure Nos. 9 0733411 and 9 0733222.
    - Molarity of HCl
    - Total solids
    - Radiochemical purity
    - ^{55}Fe concentration
    - ^{59}Fe concentration

IRON-55

Production method:	$^{54}Fe(n,\gamma)^{55}Fe$	Half-life: 2.94 years		
Cross section:	2.5 barns	Radiations:		
Target:	Fe_2O_3, enriched to ~50% ^{54}Fe	Beta	Gamma	Other
		None	None	EC (emits characteristic Mn x ray of 5.9 kev)
Target weight:	10 mg			
Neutron flux:	2×10^{14} neutrons cm^{-2} sec^{-1}			
Irradiation time:	30 min			
Reactor yield:	165 mc	Processing facility and shielding required: manipulator cell, ~2 in. lead equivalent		
Processing yield:	>95%			
Radiochemical purity: ^{59}Fe >99% (exclusive of ^{59}Fe) ^{59}Fe <5%				

1. **Prepare equipment.**	100-ml product bottle 50-ml Vycor beaker 1-liter separatory funnel 150-ml Pyrex beaker 250-ml separatory funnel Hot off-gas scrubber unit (Fig. III-3)
2. **Open irradiation can and transfer contents to 150-ml Pyrex beaker.**	See opening procedure, p. 12.
3. **Add 10 to 20 ml of 12 *M* HCl and heat solution on hot plate under hot off-gas scrubber assembly. Adjust solution to ~100 ml of 9 *M* HCl solution to prepare for extraction of ^{54}Mn.**	
4. **Equilibrate 500 ml of dichlorodiethyl ether with 9 *M* HCl by shaking in a 1-liter separatory funnel for 10 min. Separate the HCl wash and hold the ether for extraction of ^{55}Fe solution.**	
5. **Transfer 9 *M* HCl containing ^{55}Fe into 250-ml separatory funnel and add an equal volume of HCl-washed dichlorodiethyl ether. Agitate for 10 min and separate the two phases.**	Iron-55 is extracted into organic phase.
6. **Repeat the extraction twice.**	This step removes all ^{55}Fe from aqueous solution.
7. **Collect ether fractions and extract with 50 ml of distilled H_2O.**	Iron-55 is extracted into aqueous phase.
8. **Repeat water wash with 10-min agitation periods until all ^{55}Fe is removed from organic phase.**	Three extractions are usually sufficient.
9. **Collect water wash in a 50-ml Vycor beaker and evaporate to dryness under hot off-gas assembly.**	

10. **Fume with 16 *M* HNO_3.**	This removes the organic compounds.
11. **Fume twice with 12 *M* HCl.**	This removes HNO_3.
12. **Dissolve residue in 50 ml of 1 *M* HCl and transfer to product bottle.**	Product should be clear and yellow.
13. **Sample and analyze for:** **Molarity of HCl** **Total solids** **Radiochemical purity** **^{55}Fe concentration** **^{59}Fe concentration** **^{60}Co concentration**	Refer to *ORNL Master Analytical Manual* (TID-7015), procedure No. 9 0733411.

IRON-59

Production method:	$^{58}Fe(n,\gamma)^{59}Fe$	Half-life:	44.3 days
Cross section:	1.0 barn	Radiations:	
Target:	Fe_2O_3, enriched to ~60% ^{58}Fe	Beta	Gamma
		0.271 (46%)	0.191
Target weight:	15 mg	0.462 (54%)	1.098
Neutron flux:	2×10^{14} neutrons cm^{-2} sec^{-1}	1.560 (0.3%)	1.289
Irradiation time:	4 months	Processing facility and shielding required: manipulator cell, ~2 in. lead equivalent	
Reactor yield:	~300 mc		
Processing yield:	>95%		
Radiochemical purity: ^{59}Fe >99% (exclusive of ^{55}Fe) ^{55}Fe <10%			

1. Prepare equipment and process for ^{59}Fe.

Equipment, procedure, and analysis are identical to that for ^{55}Fe.

KRYPTON-85

Production method:	Fission	Half-life:	10.27 years
Fission yield:	0.3%	Radiation:	
Radiochemical purity:	>99%; contains trace quantities of atmospheric and rare gases	Beta	Gamma
		0.15 (0.65%)	0.54 (0.65%)
		0.695 (99+%)	
		Processing facility and shielding required: fixed process equipment, 4 to 6 in. lead equivalent.	

Source of Material

The unprocessed fission-produced ^{85}Kr is obtained by sorbing the gases involved from fuel dissolution. This gas is received at ORNL in 1.5 ft^3 gas cylinders at a pressure of 500 psi. Cylinders contain 1 to 18% krypton of which ~5% is ^{85}Kr. The following procedure applies only to the existing equipment at ORNL; however, the basic points would apply to any system.

Processing

1. Check fixed process equipment (Fig. III-13) by evacuating the system to a pressure of 50 μ. Valve off pump for 10 min. Heat columns to 300°C and purge with helium for 30 min.	Pressure should remain at 50 μ.
2. Cool charcoal to a temperature of −50 to ~80°C with liquid nitrogen.	This temperature must be maintained throughout the processing. The charcoal columns must not be cooled below −172°C since xenon is present.
3. Heat the carbon with a resistance heater to 1000°C.	This converts oxides of nitrogen and CO_2 to N_2 and CO.
4. Valve gas through pressure-reducing valve to system (i.e., ion chamber, carbon reactor, and column) by setting pressure-control valve at inlet of charcoal column at 90 cm Hg and at outlet at 76 cm Hg. Adjust flow to ~0.2 cfm by adjusting the throttling valve.	Since the gas cylinders are received under pressure, it is necessary to reduce this pressure to <15 psig. The radiation readings on ion chambers should be noted during the pressure reduction. Initially, there should be no reading above background on the outlet ion chamber. When a reading is obtained, the gas flow should be stopped immediately.
5. Immerse carbon trap in liquid nitrogen. Valve the gas stream through B section of the column. Pass helium through the system at a rate of ~0.2 cfm. Discard all gases until ^{85}Kr activity appears. Then route the gas through the cooled carbon trap.	If the thermal conductivity analyzer indicates a rise after the krypton peak has been reached, the collection should be stopped to prevent contamination with xenon. The remaining ^{85}Kr can be collected in a later run.

6. Evacuate the system to ~100 μ. Heat the carbon trap to ~400°C to transfer ^{85}Kr to the krypton trap.

The carbon trap should not be allowed to warm until the helium gas in the system has been pumped to the hot off-gas.

7. Heat the krypton trap to 400°C and allow gas to expand into temporary storage tank. Obtain a 1-ml sample and submit for analysis. Transfer gas to permanent storage or shipping cylinder via the krypton trap.

8. Remove ^{85}Kr from permanent storage by cooling an in-line trap to −80°C with liquid nitrogen. Allow the trap to warm sufficiently for the gas to pass through a heated metal tube filled with calcium metal.

Steps 8 to 15 are applicable only if gas is placed in permanent storage. The calcium trap is heated to ~1000°C with an rf heater. After passing over the calcium trap, the ^{85}Kr is collected in a small krypton cold trap and then placed in temporary storage.

9. Analyze the gas by mass spectrometry to determine the percent of ^{85}Kr and of contaminants. Retain the sample for dispensing.

10. Evacuate the shipping container to a pressure of <10 μ. Valve off pump for ~5 min to check for leaks.

Proceed if the pressure has not increased to >10 μ.

11. Calculate loading pressure.

$$\frac{\text{mc to be dispensed}}{\text{mc/cm}^3\ \text{(STP)}} \times \frac{273°\text{C}}{\text{room temp.}} \times \frac{76\ \text{cm}}{\text{vol of cyl.}}$$

$$= \text{(loading pressure) cm}\ .$$

12. Transfer ^{85}Kr from storage to small loading trap by cooling trap to ~80°C. After adequate gas has been transferred to the trap, allow trap to warm to such an extent that the predetermined pressure is obtained in the shipping cylinder.

13. Record the observed pressure on the mercury manometer and close valve on the shipping container. Then remove excess krypton from the system by cooling the krypton with liquid nitrogen.

See Section IV for description of shipping containers.

14. Disconnect cylinder from system and seal the valve.

Place ¼-in. adapter and opening instructions inside of valve cover for the customer.

15. After 4 hr or more, remove plug in valve cover, insert evacuated sampling chamber, and remove sample for counting with thin-window GM counter.

This determines valve leakage. If sample counts <50,000 counts/min, it is approved for shipment. Volume of sample is 170 cm^3, and the counting efficiency is ~2%.

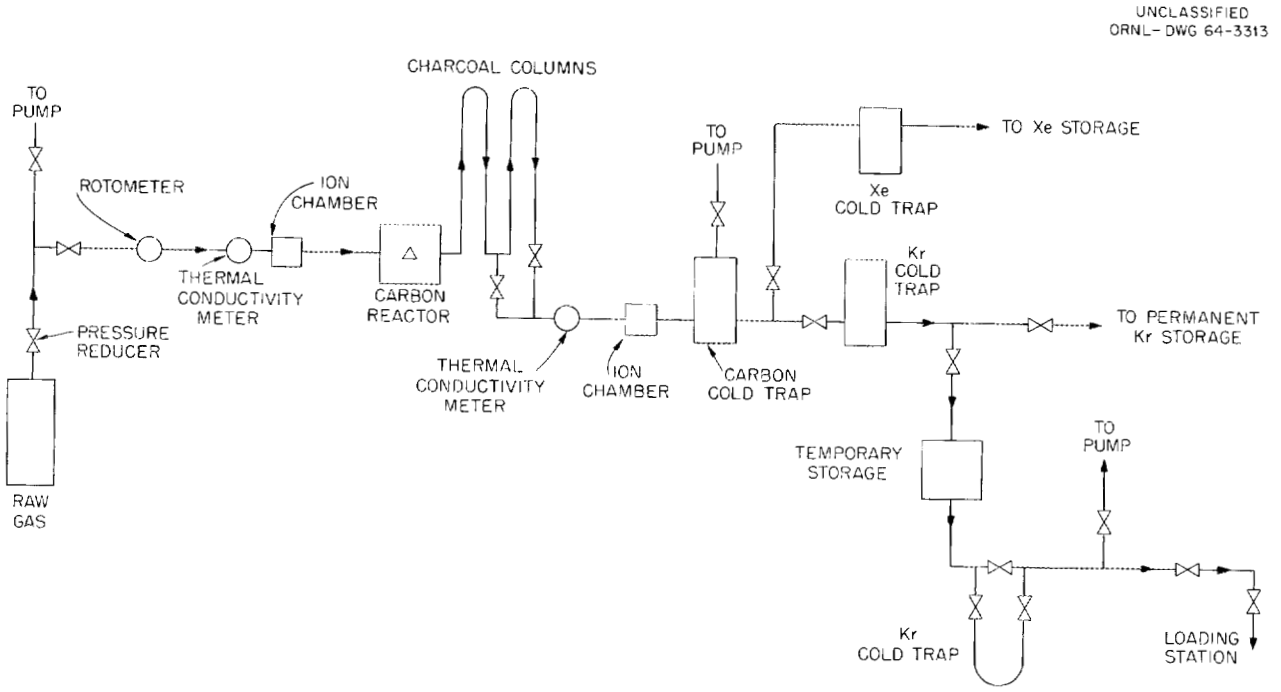

Fig. III-13. Flow Diagram for ^{85}Kr Purification.

LANTHANUM-140

Production method:	$^{139}La(n,\gamma)^{140}La$	Half-life:	40.3 hr
Cross section:	8.9 barns	Radiations:	
Target:	La_2O_3	Beta	Gamma[1]
Target weight:	100 mg	1.32 (~70%)	0.093
Neutron flux:	1×10^{13} neutrons cm^{-2} sec^{-1}	1.67 (~20%)	0.815
		2.26 (~10%)	2.50
Irradiation time:	60 hr		3.0 (weak)
Reactor yield:	600 mc	Processing facility and shielding required: manipulator cell, ~4 in. lead equivalent	
Processing yield:	>95%		
Radiochemical purity:	>98%		

1. **Prepare equipment.**	Hot off-gas scrubber unit (Fig. III-3) 150-ml Pyrex beaker 100-ml product bottle
2. **Open irradiation can and transfer target material into a beaker under hot off-gas assembly.**	See opening procedure, p. 12.
3. **Add a minimum amount of 12 *M* HCl and heat the solution to dissolve the target.**	Use a minimum amount of heat.
4. **Adjust volume to 50 ml of 1 *M* HCl and transfer to product bottle.**	Product solution should be clear and water-white.
5. **Sample and analyze for:** **Molarity of HCl** **Total solids** **^{140}La concentration** **Radiochemical purity**	Refer to *ORNL Master Analytical Manual* (TID-7015), procedure No. 9 0733491.

MERCURY-$197m_2$ and -197

Production method:

$$^{196}Hg(n,\gamma)\,^{197m_2}Hg \xrightarrow[24h]{IT\rightarrow} {}^{197m}Hg \xrightarrow[7\times10^{-9}s]{IT\rightarrow} {}^{197}Hg$$

Cross section:	^{197m_2}Hg, 400 barns ^{197}Hg, 900 barns
Target:	HgO
Target weight	1 g
Neutron flux:	1×10^{13} neutrons cm^{-2} sec^{-1}
Irradiation time:	3 days
Reactor yield:	1.6 curies
Processing yield:	>80%
Radiochemical purity	>98% (exclusive of ^{197m}Au daughter, ^{203}Hg, and ^{197m_2}Hg)

Half-life: ^{197m_2}Hg 24 hr
^{197}Hg 65 hr

Radiations:

Isotope	Beta	Gamma	Other
^{197m_2}Hg	None	0.133 (97%)	EC (3%)
		0.164 (97%)	IT (97%)
		0.191 (3%)	
		0.275 (3%)	
^{197}Hg	None	0.077	EC
		0.191	

Processing facility and shielding required: manipulator cell, 3 in. lead equivalent

---

1. **Prepare equipment.**	Hot off-gas scrubber unit (Fig. III-3) 150-ml Pyrex beaker 100-ml product bottle
2. **Open irradiation can and transfer targe material into beaker under hot off-gas scrubber assembly.**	See opening procedure, p. 12.
3. **Add a minimum amount of 16 *M* HNO_3 and heat the solution until target is dissolved.**	Overheating may result in a loss of mercury.
4. **Adjust volume to 50 ml with distilled H_2O and transfer to product bottle.**	Product solution should be clear and water-white. Nitric acid concentration should be $\geq$ 1 *M* since hydrolysis might occur at lower values.
5. **Sample and analyze for:** **Molarity of HNO_3** **Total solids** **^{197}Hg concentration** **Radiochemical purity**	Refer to *ORNL Master Analytical Manual* (TID-7015), procedure Nos. 9 0732005, 9 0731000, 9 0732009, 9 0733000, 9 073301, and 9 073302.

MERCURY-203

Production method:	$^{202}Hg(n,\gamma)^{203}Hg$	Half-life:	45.4 days
Cross section:	3.0 barns	Radiations:	
Target:	HgO	Beta	Gamma
Target weight:	10 g	0.208	0.279
Neutron flux:	2×10^{14} neutrons cm^{-2} sec^{-1}	Processing facility and shielding required: manipulator cell, 3 in. lead equivalent	
Irradiation time:	5 months		
Reactor yield:	100 curies		
Processing yield:	>80%		
Radiochemical purity:	>98%		

1. **Prepare equipment.**	Hot off-gas scrubber unit (Fig. III-3) 100-ml product bottle Three 150-ml Pyrex beakers
2. **Open irradiation can and transfer target material into beaker under a hot off-gas scrubber assembly.**	See opening procedure, p. 12.
3. **Add the minimum amount of 16 *M* HNO_3 necessary to dissolve the target.**	Low heat will increase rate of dissolution.
4. **Adjust volume to 50 ml of 5 to 6 *M* HNO_3 and transfer to product bottle.**	Solution should be clear and water-white.
5. **Remove ^{204}Tl contaminant if present.**	Concentration of ^{204}Tl is determined by radiochemical analysis.
a. **Evaporate ^{203}Hg solution to near dryness under hot off-gas scrubber assembly.**	This removes HNO_3. Overheating may result in loss of mercury.
b. **Adjust volume to 100 ml of distilled H_2O.**	Low heat will facilitate dissolution of $Hg(NO_3)_2$.
c. **Add hydrazine hydrate dropwise until pH of ~10 is attained.**	Avoid violent reaction between HNO_3 and hydrazine by stirring constantly and adding hydrazine very slowly. This step reduces mercury to the element.
d. **Allow ~1 hr for finely divided elemental mercury to deposit on bottom of beaker.**	
e. **Decant solution from elemental mercury and wash twice with 50-ml portions of distilled H_2O.**	Allow sufficient time for finely divided mercury to deposit on bottom of beaker after each H_2O wash.
f. **Evaporate until mercury forms a single drop, but do not allow beaker to become dry.**	Overheating will result in loss of mercury.
g. **Transfer elemental mercury to a clean beaker and dissolve in 50 ml of 5 to 6 *M* HNO_3 under hot off-gas scrubber assembly.**	
h. **Adjust acidity of HNO_3 to ≥ 1 *M*. Transfer product solution to product bottle.**	Product solution should be clear and water-white.
6. **Resample for determining ^{204}Tl concentration.**	
7. **Sample and analyze for:** **Molarity of HNO_3** **Total solids** **^{203}Hg concentration** **Radiochemical purity**	Refer to *ORNL Master Analytical Manual* (TID-7015), procedure No. 9 0733491.

MOLYBDENUM-99

Production method:	$^{98}Mo(n,\gamma)^{99}Mo$	Half-life: 67.0 hr	
Cross section:	0.51 barn	Radiations:	
Target:	MoO_3	Beta	Gamma[1]
Target weight:	1 g	0.08 (weak)	0.041
Neutron flux:	1×10^{13} neutrons cm^{-2} sec^{-1}	0.45 (20%)	0.181
		1.23 (80%)	0.780
Irradiation time:	60 hr	Processing facility and shielding required: manipulator cell, 2 in. lead equivalent	
Reactor yield:	150 mc		
Processing yield:	>95%		
Radiochemical purity:	>98% (exclusive of ^{99m}Tc daughter)		

1. **Prepare equipment.**	Hot off-gas scrubber unit (Fig. III-3) 150-ml Pyrex beaker 100-ml product bottle
2. **Open irradiation can and transfer target material to beaker under hot off-gas scrubber assembly.**	See opening procedure, p. 12.
3. **Cover target material with 10 *M* NH_4OH and heat to 50 to 60°C to dissolve target.**	Do not boil.
4. **Take up in 50 ml of 1 *M* NH_4OH and transfer to product bottle.**	Product solution should be clear and water-white.
5. **Sample and analyze for:** **Molarity of NH_4OH** **Total solids** **^{99}Mo concentration** **Radiochemical purity**	Refer to *ORNL Master Analytical Manual* (TID-7015), procedure No. 9 0733501.

NEODYMIUM-147–PROMETHIUM-147

Production method:	Fission	Half-life:	^{147}Pm 2.5 years
$^{147}Nd \xrightarrow[11.06d]{\beta\rightarrow} {}^{147}Pm$		Radiations:	
Fission yield:	2.6%	Beta	Gamma
Radiochemical purity:		0.223	None
^{147}Nd >98%		Processing facility and shielding required:	
^{147}Pm Time-dependent		manipulator cell, 6 in. lead equivalent	

Source of Material

The starting material for this procedure is long-irradiated uranium which has decayed about a year before processing. Long periods of irradiation provide maximum yield of promethium, and the long decay reduces ^{148}Pm content. Prior to ion exchange purification, the rare-earth fraction has been concentrated and further processed by solvent extraction, which removes most of ^{144}Ce and stable yttrium.

Processing

1. Prepare equipment.	Fixed process equipment (Fig. III-14)
2. Determine the size of column needed for the promethium separation.	The initial amount of feed determines the size of the column needed. The feed material usually contains ~5 wt % ^{147}Pm; the remainder is stable Nd, Sm, and Pr. Heating the column speeds up the exchange rate and permits faster flow.
3. Fill the column with ~70 + 80-mesh hydrogen-form Dowex 50W-X4 resin.	The top of the resin must be flat to ensure good band formation.
4. Load resin at full flow with promethium feed to ~$\frac{1}{3}$ the total length of the column. Nitric acid content should not exceed 0.1 *M*; have cation concentration as high as possible after the rare earths are leached. Wash with 1 column volume of distilled H_2O.	The remaining two-thirds of column length permits good band resolution during elution. Low acidity permits good, compact loading. High cation concentration and fast flow permit fast loading and minimizes gassing. Column discharge line should pass through the ion chamber used to monitor activity peaks as they elute.
5. Elute column with 0.5% diethylenetriaminepentaacetic acid (DTPA) at a pH of 5.5 to 6.5. Elute at a rate of 1 to 2 column volumes per hour.	Eluant must be boiled before entering the column to remove dissolved air and thus prevent gassing of column. The pH of DTPA is adjusted with NH_4OH. Formation of promethium band should become visible after ~3 to 4 hr.
6. Apply hot H_2O (80°C) to column 1 hr after elution is begun.	Dissolved air in column must be swept out by degassed eluant before hot H_2O is applied.

7. Collect eluant to measure volume of each peak.	This is necessary only when separation factors are of interest.
(*a*) When first activity peak appears on ion chamber, start collection in new bottle.	First peak is $^{152,154}Eu$ and ^{241}Am, which peak together.
(*b*) Change bottles when Am-Eu peak passes from column.	Samarium is the next element to elute. Samarium-151, which is the only samarium activity present, does not show up on ion chamber. The bulk of the samarium is stable.
(*c*) Change bottles when ion chamber begins to rise on second peak. Change when peak passes from column.	Second peak is ^{147}Pm.
(*d*) Watch for a deep "valley" on ion chamber recorder which usually occurs between the second and third peak.	Stable neodymium elutes after promethium. Praseodymium follows neodymium, sometimes showing a small amount of ^{144}Pr activity if a considerable amount of ^{144}Ce is on the column.
(*e*) Watch the ion chamber for the last peak.	This is ^{144}Ce along with stable cerium.
8. Sample each fraction from each peak.	The stable elements are difficult to analyze. Their identification may be made by their position between activity peaks and by the known order of elution.
9. Combine the bottles containing the promethium fraction for the second pass, which is usually the final purification.	After the first pass, the promethium should be ~35 to 40% of the total rare-earth concentration. A third pass can be performed if necessary.
10. Add 15 ml of concentrated HNO_3 per liter of fraction to break the Pm-DTPA complex for second pass loading of the column. Repeat steps 2 to 9 for final purification.	Column size for final pass will be determined by the amount of promethium to be processed.
11. Sample final promethium fractions and analyze.	Spectrographic analysis is needed to determine promethium purity. Promethium-147 is determined by radiochemical analysis; ^{241}Am is determined by gross alpha analysis.
12. To the final acceptable fractions, add 15 ml of 70% HNO_3 per liter. Adsorb this solution on a $^3/_4$-in.-diam by 6-in.-long column containing Dowex 50W-X4 resin. Wash column with H_2O.	
13. Strip column with 3 *M* HNO_3.	
14. Fume the ^{147}Pm-HNO_3 solution with 12 *M* HCl twice.	This removes residual HNO_3 and converts to chloride.
15. Dissolve residue in 1 *M* HCl to provide a solution of ~1000 mc/ml.	
16. Sample and analyze for: Heavy metals Total solids Gross alpha ^{147}Pm concentration Molarity of HCl	Refer to *ORNL Master Analytical Manual* (TID-7015), procedure No. 9 0733661. Decide ultimate disposal of other element fractions. Fractions for each element may be combined and rerun individually. Procedure for processing stable Nd, Sm, Pr, and ^{144}Ce is the same as that described above.

UNCLASSIFIED
ORNL-DWG 64-3304

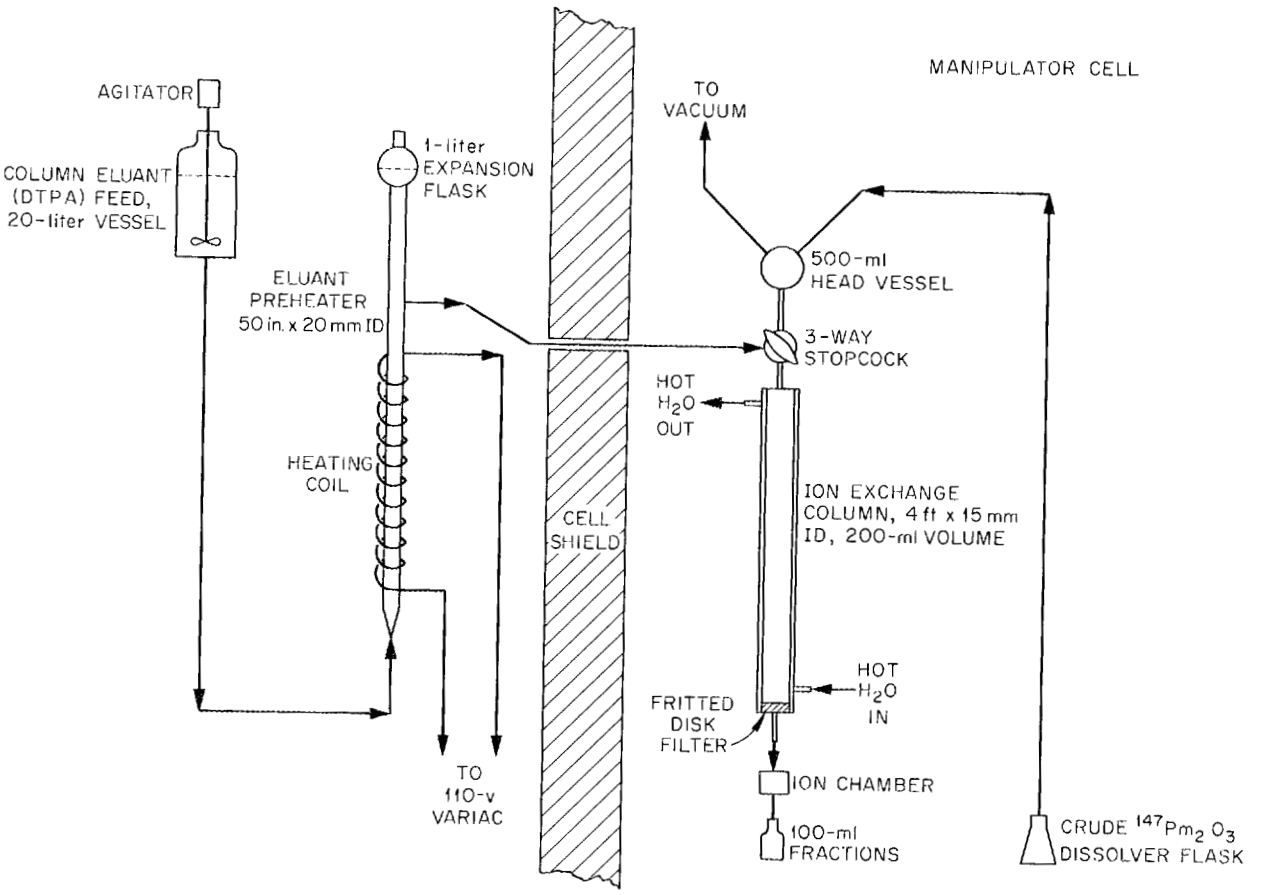

Fig. III-14. Flow Diagram for ^{147}Pm Purification.

NICKEL-63

Production method:	$^{62}Ni(n,\gamma)^{63}Ni$	Half-life:	125 years
Cross section:	15 barns	Radiations:	
Target:	NiO, enriched to ~98% ^{62}Ni	Beta	Gamma
		0.067	None
Target weight:	250 mg	Processing facility and shielding required:	
Neutron flux:	2×10^{14} neutrons cm^{-2} sec^{-1}	manipulator cell, 6 in. lead equivalent	
Irradiation time:	~150 weeks		
Reactor yield:	~2.8 curies		
Processing yield:	>95%		
Radiochemical purity:	^{63}Ni >95% ^{59}Ni ~0.01%		

1. **Prepare equipment.**	Hot off-gas scrubber unit (Fig. III-3) Quartz evaporation dish 250-ml Pyrex beaker Four 150-ml Pyrex beakers 40-ml ion exchange column (Fig. III-4) 100-ml product bottle
2. **Open irradiation can and remove target from ampule.**	See opening procedure, p. 12.
3. **Wash crushed quartz capsule and NiO from Tygon tube into evaporation dish with 12 *M* HCl.**	
4. **Heat to dissolve NiO. Use hot off-gas scrubber assembly.**	Add additional HCl if necessary to dissolve sample.
5. **Dissolve $NiCl_2 \cdot 6\,H_2O$ crystals in 12 *M* HCl.**	Use approximately 100 ml of 12 *M* HCl per gram of nickel; heat if necessary to produce clear solution.
6. **Evaporate $NiCl_2$ solution to dryness and fume with 12 *M* HCl.**	Avoid converting chloride to oxide.
7. **Prepare a Dowex 1 resin column for ^{58}Co separation.**	Use 100-mesh resin, conditioned with 12 *M* HCl. Resin volume should be ~70 ml per gram of nickel in solution.
8. **Pass $NiCl_2$ solution through the resin column; rinse column with 12 *M* HCl until green color is eluted.**	Cobalt-58 remains on column.
9. **Collect effluent from resin column in 250-ml beaker and evaporate to dryness on hot plate.**	
10. **Fume with 16 *M* HNO_3.**	This step removes traces of ion exchange resin.
11. **Evaporate to crystals and fume several times with 12 *M* HCl, taking solution to crystals.**	Nitric acid is removed.

12. Dissolve crystals in 50 ml of 1 *M* HCl and transfer to product bottle.

13. Sample and analyze for:
    Total solids
    Molarity of HCl
    ^{63}Ni concentration
    Radiochemical purity

Refer to *ORNL Master Analytical Manual* (TID-7015), procedure No. 9 0733541.

NIOBIUM-95

Production method:	Fission $^{95}Zr \xrightarrow[65d]{\beta\rightarrow} {}^{95}Nb$	Half-life: 35.0 days	
Fission yield:	6.4%	Radiations:	
Target:	U-Al alloy	Beta	Gamma
Radiochemical purity:	>98%	0.160	0.745
		Processing facility and shielding required: manipulator cell, 6 in. lead equivalent	

1. Prepare equipment.	1-in.-diam by 6-in.-long ion exchange column (Fig. III-7) Serum centrifuge 150-ml product bottle Two 150-ml Pyrex beakers Two 50-ml centrifuge tubes
2. To 10 ml of ^{95}Zr-^{95}Nb (in 5% oxalic acid solution) in a 50-ml centrifuge tube, add 10 ml of concentrated HNO_3. Then add saturated $KMnO_4$ dropwise until precipitate forms.	MnO_2 precipitate carries the ^{95}Nb; see ^{95}Zr-^{95}Nb procedure.
3. Heat tube in boiling H_2O. If precipitate disappears, add $KMnO_4$ dropwise until it remains.	
4. Place tube in centrifuge and centrifuge ~10 min. Discard centrifugate.	Centrifugate contains ^{95}Zr.
5. Add saturated oxalic acid solution dropwise to the precipitate until MnO_2 dissolves. Add to the oxalic solution an equal amount of concentrated HNO_3.	
6. Heat in boiling H_2O, with the addition of saturated $KMnO_4$ dropwise, until precipitate forms and remains.	
7. Repeat steps 4, 5, and 6 three times.	Each precipitation removes fractional amounts of ^{95}Zr.
8. Repeat step 4 and dissolve precipitate in 5% oxalic acid solution.	
9. Prepare ion exchange column by adding enough −50 +100 mesh hydrogen-form Dowex 50W-X12 resin to make a bed 6 in. long. Attach a pinch clamp on discharge of column to control flow rate.	
10. Add oxalic acid solution from step 8 to column and control flow through column to ~1 drop every 2 sec. Collect solution in clean container.	Niobium-95 oxalate complex passes through resin and manganese is retained.

11. Wash resin with 50 ml of 5% oxalic acid. Collect oxalic wash.	Oxalic wash removes all ^{95}Nb from resin.
12. Transfer to product bottle.	
13. Sample and analyze for: ^{95}Nb concentration Radiochemical purity	Refer to *ORNL Master Analytical Manual* (TID-7015), procedure No. 9 0733551.

OSMIUM-191

Production method:	$^{190}Os(n,\gamma)^{191}Os$	Half-life: 16.0 days	
Cross section:	8 barns	Radiations:	
Target:	Osmium metal powder	Beta	Gamma
		0.143	0.042
Target weight:	25 mg		0.129
Neutron flux:	2×10^{14} neutrons cm^{-2} sec^{-1}	Processing facility and shielding required: manipulator cell, 2 in. lead equivalent	
Irradiation time:	3 weeks		
Reactor yield:	350 mc		
Processing yield:	>90%		
Radiochemical purity:	>95% (exclusive of other osmium activities)		

1. **Prepare equipment.**	500-ml standard distillation system (Fig. III-15) The distillation system should be all glass, tightly sealed, and completely closed. Do not use grease on tapered joints. 150-ml Pyrex beaker 100-ml product bottle
2. **Add 25 ml of 1 *M* NaOH solution to distillate receiver and 50 ml of 1 *M* NaOH solution to each of three scrubbers in the distillation system.**	
3. **Open irradiation can and transfer target material into double-necked flask.**	See opening procedure, p. 12.
4. **Cover target material with ~5 ml of aqua regia and heat to boiling. Add 5-ml increments of aqua regia as required to dissolve target.**	
5. **Add H_2O_2 dropwise to boiling flask to distil osmium as OsO_4.**	As OsO_4 is trapped in distillate receiver, the NaOH solution turns from yellow to orange. If sufficient acid is distilled into distillate receiver to render it acid, the osmium activity will be trapped in the first scrubber, as indicated by the yellow-orange color.
6. **Collect osmium product, adjust volume to 50 ml with 1 *M* NaOH solution, and transfer to product bottle.**	Product solution should be clear and yellow.
7. **Sample and analyze for:** **Molarity of NaOH** **Total solids** **^{191}Os concentration** **Radiochemical purity**	Refer to *ORNL Master Analytical Manual* (TID-7015), procedure No. 9 0733571.

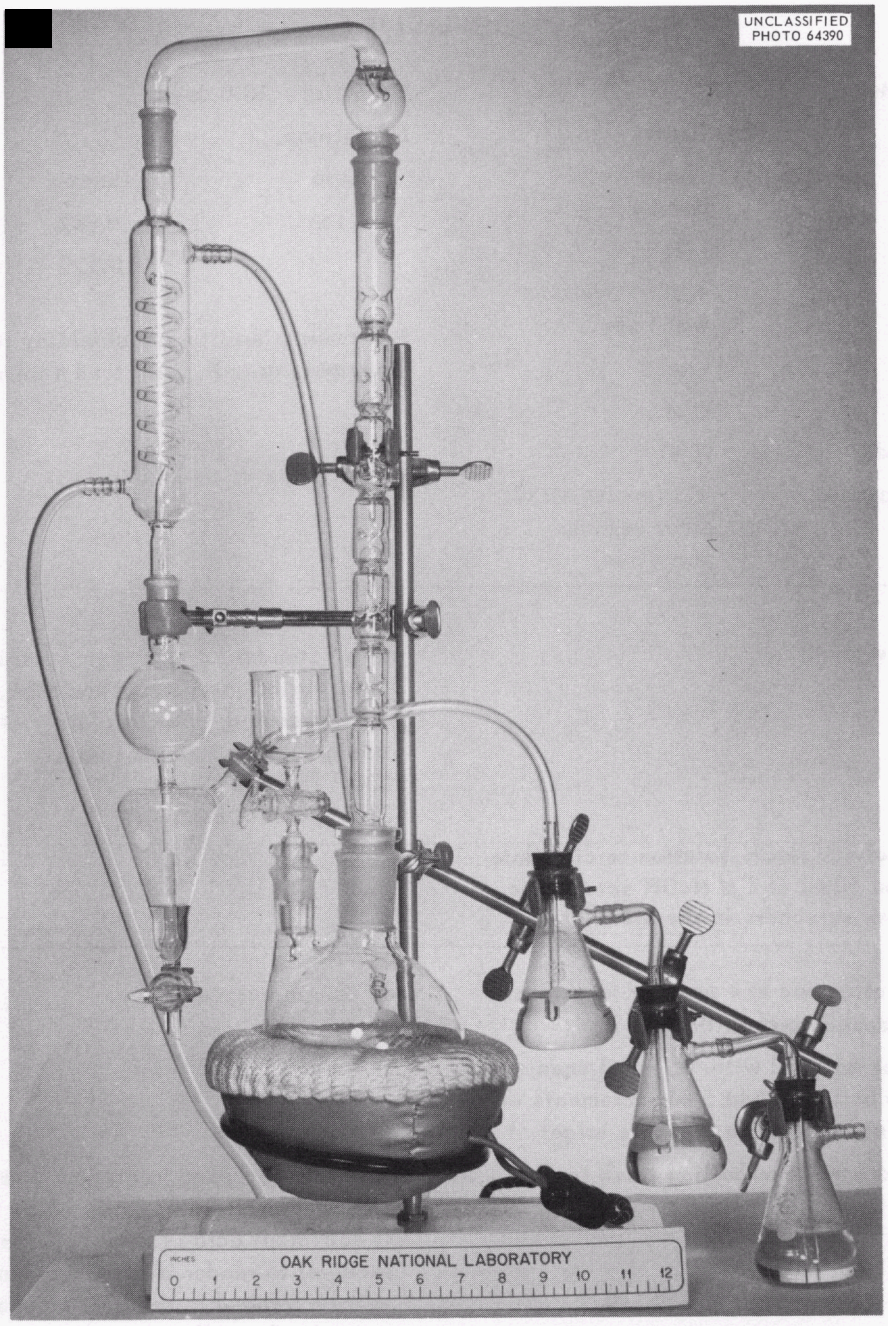

Fig. III-15. Osmium-191 Distillation Equipment with Scrubbers.

PALLADIUM-109

Production method:	$^{108}Pd(n,\gamma)^{109}Pd$	Half-life: 13.6 hr	
Cross section:	11 barns	Radiations:	
Target:	Palladium metal	Beta	Gamma
Target weight:	50 mg	0.961	0.087
Neutron flux:	1×10^{13} neutrons cm^{-2} sec^{-1}	Processing facility and shielding required: manipulator cell or hot hood equipped with hot off-gas facilities, 3 in. lead equivalent	
Irradiation time:	60 hr		
Reactor yield:	350 mc		
Processing yield:	>80%		
Radiochemical purity:	>95% (exclusive of ^{109m}Ag daughter)		

1. **Prepare equipment.**	Hot off-gas scrubber unit (Fig. III-3) 150-ml Pyrex beaker 100-ml product bottle
2. **Open irradiation can and transfer target into beaker under a hot off-gas scrubber assembly.**	See opening procedure, p. 12.
3. **Cover target material with aqua regia and heat to near boiling.**	Add fresh aqua regia as required until target material is completely dissolved.
4. **Evaporate target solution to 3 to 4 ml.**	Evaporation expels excess acid.
5. **Dilute to 50 ml with distilled H_2O and transfer to product bottle.**	Product solution should be clear and reddish brown.
6. **Sample and analyze for:** **Molarity of HCl** **Total solids** **^{109}Pd concentration** **Radiochemical purity**	Refer to *ORNL Master Analytical Manual* (TID-7015), procedure No. 9 0733591.

PHOSPHORUS-32

Production method:	$^{32}S(n,p)^{32}P$	Half-life: 14.3 days	
Cross section:	0.065 barn	Radiations:	
Target:	Sulfur	Beta	Gamma
Target weight:	35 g	1.701	None
Neutron flux:	2×10^{14} neutrons cm^{-2} sec^{-1} (thermal) and $\sim 1 \times 10^{13}$ neutrons cm^{-2} sec^{-1} (fast)	Processing facility and shielding required: manipulator cell, 6 in. lead equivalent	
Irradiation time:	8 weeks		
Reactor yield:	30 curies		
Processing yield:	>95%		
Radiochemical purity:	>99% (exclusive of ^{33}P)		

Preparing Target

1. **Purify sulfur target by heating with ~10 wt % of MgO at 225°C for several hours.**	Sulfur purification is a difficult and tedious procedure; however, the purity of the final ^{32}P is dependent upon the preparation of very pure sulfur. Repeated distillation from platinum equipment removes traces of magnesium and other impurities.
2. **Melt 35 g of purified sulfur into an aluminum irradiation capsule. Close by welding.**	Aluminum capsule is treated with hot concentrated nitric acid to clean and reduce the possibility of sulfur corrosion during irradiation.

Processing

1. **Prepare equipment.**	Sulfur distillation equipment (Fig. III-16) Sulfur melting furnace (Fig. III-17) 250-ml Pyrex beaker 500-ml Pyrex beaker Fritted-glass filtering funnel Tubing cutter
2. **Open aluminum capsule with a tubing cutter by positioning capsule between two resistance heaters over a quartz cup.**	Avoid overheating that might ignite the sulfur (Fig. III-17). The sulfur is allowed to melt and flow out of the irradiation capsule into the cup.
3. **Transfer the quartz cup into the distillation unit, and distil sulfur from cup at a temperature of 450 to 475°C.**	Do not overheat; distillation should require 2 to 3 hr.
4. **Allow distillation equipment to cool and transfer quartz cup to a beaker. Add 80 ml of ~1 *M* HCl to the cup to dissolve $^{32}P_2O_5$.**	Leach cup for 8 to 16 hr at 80 to 90°C.

5. Transfer leach solution to a beaker and rinse cup with 20 to 30 ml of H_2O.
6. Heat combined leach and rinse solutions for 4 hr at 90°C. — Orthophosphoric acid is formed.
7. Filter solution through a fine sintered-glass funnel and adjust volume to 100 to 125 ml of 1 *M* HCl.
8. Sample and analyze for: — Refer to *ORNL Master Analytical Manual* (TID-7015), procedure No. 9 0733601.
   - Molarity of HCl
   - Heavy metals
   - ^{32}P Concentration
   - Total solids
   - Radiochemical purity

UNCLASSIFIED
ORNL-DWG 64-3305

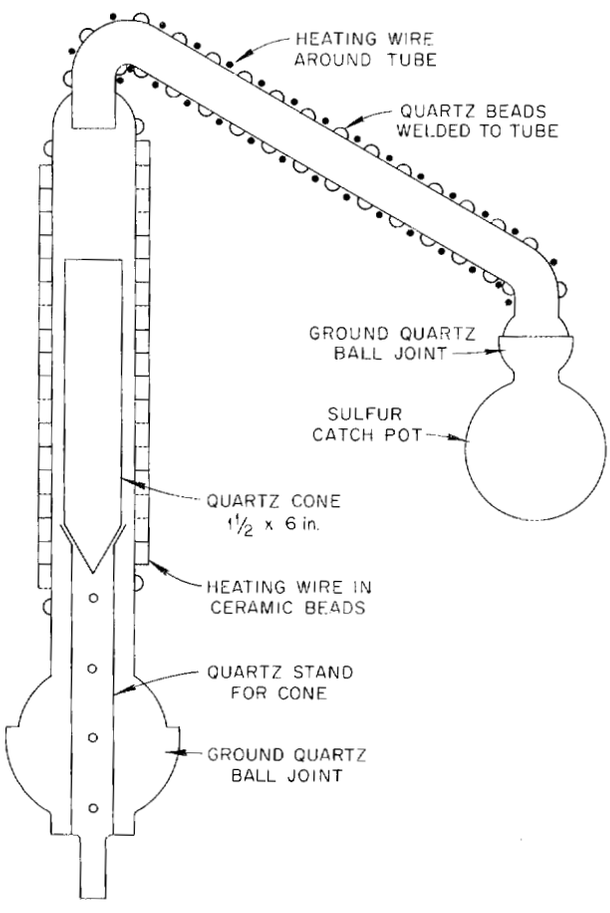

Fig. III-16. Sulfur Distillation Equipment, Front Cutaway.

UNCLASSIFIED
ORNL-DWG 64-3306

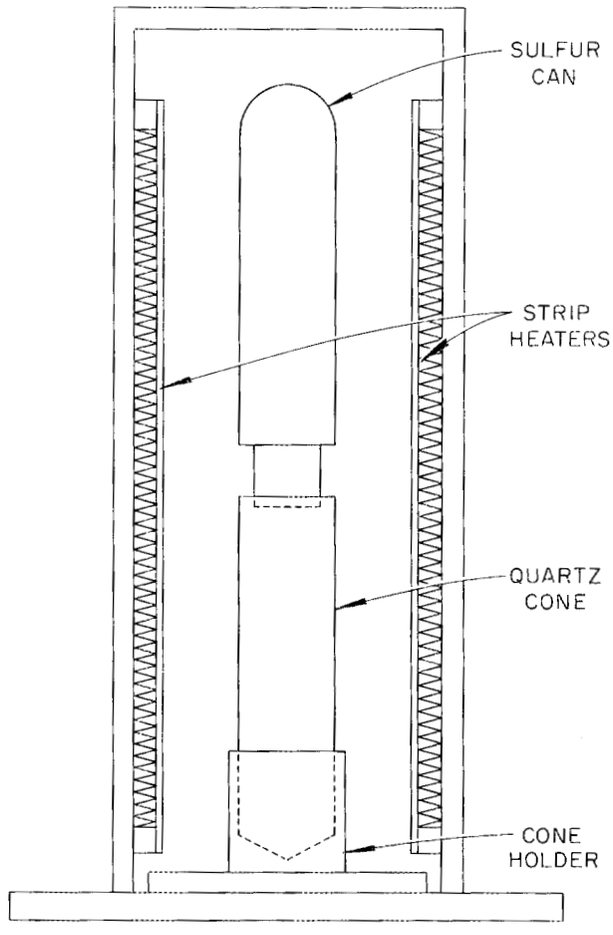

Fig. III-17. Sulfur Melting Furnace, Front Removed.

POTASSIUM-42

Production method:	$^{41}K(n,\gamma)^{42}K$	Half-life: 12.47 hr	
Cross section:	1.1 barns	Radiations:	
Target:	K_2CO_3	Beta	Gamma
Target weight:	3 g	2.04 (20%)	0.320 (0.16%)
Neutron flux:	$\sim 1.3 \times 10^{14}$ neutrons cm^{-2} sec^{-1}	3.58 (80%)	1.51 (20%)
Irradiation time:	61 hr	Processing facility and shielding required: manipulator cell, 4 in. lead equivalent	
Reactor yield:	700 mc		
Processing yield:	>95%		
Radiochemical purity:	>99%		

1. **Prepare equipment.**	Hot off-gas scrubber unit (Fig. III-3) 150-ml Pyrex beaker 100-ml product bottle
2. **Open irradiation can and transfer target material into beaker under hot off-gas scrubber assembly.**	See opening procedure, p. 12.
3. **Dissolve target material in a minimum amount of 12 *M* HCl.**	Add HCl dropwise to minimize effervescence of CO_2
4. **Adjust volume to 50 ml of 1 *M* HCl and transfer to product bottle.**	Product solution should be clear and water-white.
5. **Sample and analyze for:** **Molarity of HCl** **Total solids** **^{42}K concentration** **Radiochemical purity**	Refer to *ORNL Master Analytical Manual* (TID-7015), procedure No. 9 0733641.

PRASEODYMIUM-142

Production method:	$^{141}Pr(n,\gamma)^{142}Pr$	Half life: 19.2 hr	
Cross section:	12.0 barns	Radiations:	
Target:	Pr_2O_3	Beta	Gamma
Target weight:	10 mg	0.59 (~7%)	1.6
Neutron flux:	1×10^{13} neutrons cm^{-2} sec^{-1}	2.166 (~93%)	
Irradiation time:	60 hr	Processing facility and shielding required: manipulator cell or hot hood equipped with hot off-gas facilities, 2 in. lead equivalent	
Reactor yield:	120 mc		
Processing yield:	>90%		
Radiochemical purity:	>98%		

1. **Prepare equipment.**	Hot off-gas scrubber unit (Fig. III-3) 150-ml Pyrex beaker 100-ml product bottle
2. **Open irradiation can and transfer target material into beaker under hot off-gas scrubber assembly.**	See opening procedure, p. 12.
3. **Dissolve target material in a minimum amount of 12 *M* HCl.**	Low heat will increase rate of dissolution.
4. **Adjust volume to 50 ml of 1 *M* HCl and transfer to product bottle.**	Product solution should be clear and water-white.
5. **Sample and analyze for:** **Molarity of HCl** **Total solids** **^{142}Pr concentration** **Radiochemical purity**	Refer to *ORNL Master Analytical Manual* (TID-7015), procedure No. 9 0733650.

PROMETHIUM-147

(See Neodymium-147)

RHENIUM-186

Production method:	$^{185}Re(n,\gamma)^{186}Re$
Cross section:	110 barns
Target:	Rhenium metal
Target weight:	0.1 g
Neutron flux:	$\sim 1 \times 10^{13}$ neutrons cm^{-2} sec^{-1}
Irradiation time:	60 hr
Reactor yield:	4 curies
Processing yield:	>90%
Radiochemical purity:	>98% (exclusive of ^{188}Re)

Half-life: 88.9 hr

Radiations:

	Beta	Gamma	Other
~95%	0.3 (weak)	0.123	EC (~5%)
	0.926	0.137	
	1.063	0.627	
		0.764	

Processing facility and shielding required: manipulator cell, 3 in. lead equivalent

1. **Prepare equipment.**	Hot off-gas scrubber unit (Fig. III-3) 150-ml Pyrex beaker 100-ml product bottle
2. **Open irradiation can and transfer target into beaker under hot off-gas scrubber assembly.**	See opening procedure, p. 12.
3. **Dissolve target material in a minimum amount of 16 *M* HNO_3.**	A few drops of H_2O_2 and low heat increase rate of dissolution.
4. **Adjust volume to 50 ml of 1 *M* HNO_3 and transfer to product bottle.**	Product solution should be clear and water-white.
5. **Sample and analyze for:** **Molarity of HNO_3** **Total solids** **^{186}Re concentration** **^{188}Re concentration** **Radiochemical purity**	Refer to *ORNL Master Analytical Manual* (TID-7015), procedure No. 9 0733731.

RUBIDIUM-86

Production method:	$^{85}Rb(n,\gamma)^{86}Rb$	Half-life:	18.68 days
Cross section:	1.0 barn	Radiations:	
Target:	Rb_2CO_3	Beta	Gamma
Target weight:	6.5 g	0.72 (20%)	1.08 (8.9%)
Neutron flux:	2×10^{14} neutrons $cm^{-2}\,sec^{-1}$	1.82 (80%)	
Irradiation time:	15 weeks	Processing facility and shielding required: manipulator cell, 2 in. lead equivalent, minimum	
Reactor yield:	6 curies		
Processing yield:	>80%		
Radiochemical purity:	>98%		

1. **Prepare equipment.**	Hot off-gas scrubber unit (Fig. III-3) 150-ml Pyrex beaker
2. **Open irradiation can and transfer target material into beaker under hot off-gas scrubber assembly.**	See opening procedure, p. 12.
3. **Add 12 *M* HCl dropwise until target is dissolved.**	Slow addition of acid reduces sample loss due to effervescence.
4. **Adjust volume to 50 ml of 1 *M* HCl and transfer to product bottle.**	Product solution should be water-white.
5. **Sample and analyze for:** **Molarity of HCl** **Total solids** **^{86}Rb concentration** **Radiochemical purity**	Refer to *ORNL Master Analytical Manual* (TID-7015), procedure No. 9 0733721.

RUTHENIUM-97

Production method:	$^{96}Ru(n,\gamma)^{97}Ru$	Half-life: 2.9 days		
Cross section:	0.2 barn	Radiations:		
Target:	RuO_2	Beta	Gamma	Other
Target weight:	1 g	None	0.109	EC
Neutron flux:	2×10^{14} neutrons cm^{-2} sec^{-1}		0.216	No β^+
			0.325	
Irradiation time:	2 days			
Reactor yield:	30 mc	Processing facility and shielding required: manipulator cell, 2 in. lead equivalent		
Processing yield:	>90%			
Radiochemical purity:	>99%			

1. **Prepare equipment.**	Hot off-gas scrubber unit (Fig. III-3) 150-ml Pyrex beaker 100-ml product bottle
2. **Open irradiation can and transfer target into beaker under hot off-gas scrubber assembly.**	See opening procedure, p. 12.
3. **Dissolve target material in minimum amount of 12 *M* HCl.**	Low heat increases rate of dissolution.
4. **Adjust volume to 50 ml of 5 to 6 *M* HCl and transfer to product bottle.**	Product solution should be clear and reddish brown.
5. **Sample and analyze for:** **Molarity of HCl** **Total solids** **^{97}Ru concentration** **Other activities** **Radiochemical purity**	Refer to *ORNL Master Analytical Manual* (TID-7015), procedure No. 9 0733732.

RUTHENIUM-103

Production method:	Fission	Half-life:	39.7 days
Fission yield:	2.9%	Radiations:	
Target:	U-Al alloy	Beta	Gamma
Irradiation time:	4 weeks	0.11 (7%)	0.498
Radiochemical purity:		0.22 (90%)	0.610
^{103}Ru >99% (exclusive of ^{106}Ru and ^{106}Rh)		0.71 (3%)	
^{106}Ru-^{106}Rh <10%		Processing facility and shielding required: manipulator cell, 6 in. lead equivalent, minimum	

1. Prepare equipment.	Ruthenium distillation system (Fig. III-18)
2. Add 75 ml of concentrated HCl to each bubble trap.	
3. Add 200 ml of uranyl nitrate solution from the ^{131}I process dissolver and 100 ml of concentrated H_2SO_4 to evaporation flask.	See ^{131}I procedure.
4. Apply vacuum to the system and carefully adjust it so that there is a slight bubbling of air through the solution.	
5. Add 100 to 150 ml of saturated $KMnO_4$ dropwise.	Potassium permanganate oxidizes ^{103}Ru to Ru^{8+} where it will readily distil as RuO_4 from the hot H_2SO_4 solution.
6. Carefully heat flask with a Bunsen burner.	Avoid vigorous boiling.
7. Distil enough vapor into the bubble traps to about double the original 75 ml of HCl added.	If a curie or more of ^{103}Ru activity is distilled over, the HCl solution turns brown.
8. Remove heat from the flask. Continue to sweep air through the system until the flask cools.	
9. Discard the evaporator flask solution.	**Caution:** This solution contains other fission product activities.
10. Drain HCl-^{103}Ru solution from bubble traps into product bottle.	Ruthenium-103 product is in ~6 *M* HCl.
11. Sample and analyze for: ^{103}Ru concentration Molarity of HCl Radiochemical purity	Refer to *ORNL Master Analytical Manual* (TID-7015), procedure No. 9 073371.

UNCLASSIFIED
ORNL-DWG 64-3307

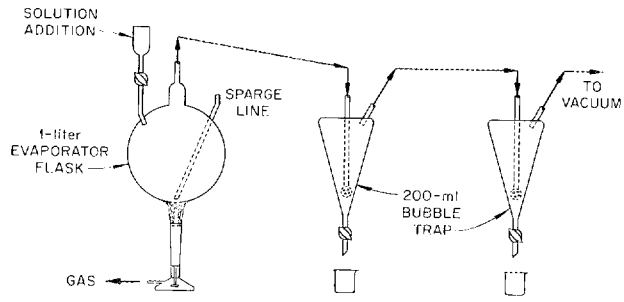

Fig. III-18. Ruthenium Purification System.

RUTHENIUM-106–RHODIUM-106

Production method: Fission

$^{106}Ru \xrightarrow[371d]{\beta^-} {}^{106}Rh$

Fission yield: 0.38%

Target: U-Al alloy

Radiochemical purity:

^{106}Ru >99% (exclusive of ^{103}Ru)

^{103}Ru <10%

^{106}Rh (in equilibrium)

Half-life: ^{106}Ru 371 days
^{106}Rh 30 sec

Radiations:[1]

	Beta	Gamma
^{106}Ru	0.0392	None
^{106}Rh	2.0 (3%)	0.513
	2.44 (12%)	0.87
	3.1 (11%)	1.045
	3.53 (68%)	2.41

Processing facility and shielding required: manipulator cell, 6 in. lead equivalent, minimum

---

1. **Prepare equipment.** — Ruthenium distillation system (Fig. III-18) 100-ml product bottle
2. **Add 75 ml of concentrated HCl to each bubble trap.**
3. **Pour 200 ml of uranyl nitrate solution from irradiated uranium slugs into evaporation flask; add 100 ml of concentrated H_2SO_4.** — Long irradiation of uranium slugs is necessary for good ^{106}Ru production. The slugs must have decayed at least a year before processing.
4. **Open the vacuum to the system carefully and adjust it so that there is a slight bubbling of air through the solution.**
5. **Add up to 150 ml of saturated $KMnO_4$ dropwise.**
6. **Carefully heat the flask with a Bunsen burner.** — Avoid vigorous boiling.
7. **Distil enough vapor into the bubble traps to about double the original 75 ml of HCl added.** — If a curie or more of ^{106}Ru activity is distilled over, the HCl solution turns brown.
8. **Remove heat from the flask. Continue to sweep air through the system until the flask cools.**
9. **Discard evaporator flask solution.** — **Caution:** Solution contains other fission product activities.
10. **Drain HCl-^{106}Ru solution from bubble traps into product bottle.** — Ruthenium-106 product is in ~6 *M* HCl.
11. **Sample and analyze for:**
    Molarity of HCl
    ^{103}Ru concentration
    ^{106}Ru concentration
    Radiochemical purity. — Refer to *ORNL Master Analytical Manual* (TID-7015), procedure No. 9 0733731.

SAMARIUM-153

Production method:	$^{152}Sm(n,\gamma)^{153}Sm$	Half-life: 46.8 hr	
Cross section:	220 barns	Radiations:	
Target:	Sm_2O_3	Beta	Gamma
Target weight:	10 mg	0.26 (9%)	0.0691
Neutron flux:	1×10^{13} neutrons cm^{-2} sec^{-1}	0.685 (70%)	0.1027
		0.795 (21%)	0.548
Irradiation time:	60 hr		
Reactor yield:	300 mc	Processing facility and shielding required: manipulator cell or hot hood equipped with hot off-gas facilities, 3 in. lead equivalent	
Processing yield:	>95%		
Radiochemical purity:	>98%		

1. **Prepare equipment.**	Hot off-gas scrubber unit (Fig. III-3) 150-ml Pyrex beaker 100-ml product bottle
2. **Open irradiation can and transfer target into beaker under hot off-gas scrubber assembly.**	See opening procedure, p. 12.
3. **Dissolve target material in a minimum amount of 12 *M* HCl.**	Low heat increases rate of dissolution.
4. **Adjust volume to 50 ml of 1 *M* HCl and transfer to product bottle.**	Product solution should be clear and water-white.
5. **Sample and analyze for:** **Molarity of HCl** **Total solids** **^{153}Sm concentration** **Radiochemical purity**	Refer to *ORNL Master Analytical Manual* (TID-7015), procedure No. 9 0733741.

SCANDIUM-46

Production method:	$^{45}Sc(n,\gamma)^{46}Sc$	Half-life:	84.2 days	
Cross section:	23 barns	Radiations:		
Target:	Sc_2O_3		Beta	Gamma
Target weight:	30 mg		0.36 (~99.5%)	0.89 (~99.5%)
Neutron flux:	2×10^{14} neutrons cm^{-2} sec^{-1}		1.2 (~0.5%)	1.12 (100%)
Irradiation time:	1 year	Processing facility and shielding required: manipulator cell, 4 in. lead equivalent		
Reactor yield:	10 curies			
Processing yield:	>95%			
Radiochemical purity:	>99%			

1. **Prepare equipment.**	Hot off-gas scrubber unit (Fig. III-3) 150-ml Pyrex beaker 100-ml product bottle
2. **Open irradiation can and transfer target into beaker under hot off-gas scrubber assembly.**	See opening procedure, p. 12.
3. **Dissolve target material in minimum amount of 12 *M* HCl.**	Low heat increases rate of dissolution.
4. **Adjust volume to 50 ml with 1 *M* HCl and transfer to product bottle.**	Production solution should be clear and water-white.
5. **Sample and analyze for:** **Molarity of HCl** **Total solids** **^{46}Sc concentration** **Radiochemical purity**	Refer to *ORNL Master Analytical Manual* (TID-7015), procedure No. 9 0733751.

SELENIUM-75

Production method:	$^{74}Se(n,\gamma)^{75}Se$	Half-life:	119.9 days	
Cross section:	30 barns	Radiations:		
Target:	Selenium metal	Beta	Gamma[1]	Other
Target weight:	300 mg of enriched ~13% ^{74}Se	None	0.067 (0.5%)	EC
Neutron flux:	$\sim 2 \times 10^{14}$ neutrons cm^{-2} sec^{-1}		0.077 (14%)	
			0.138 (24%)	
Irradiation time:	12 weeks		0.269 (71%)	
Reactor yield:	~1.6 curies		0.405 (14%)	
Processing yield:	>95%	Processing facility and shielding required: manipulator cell or hot hood, 4 in. lead equivalent		
Radiochemical purity:	97%			

1. **Prepare equipment.**	Hot off-gas scrubber unit (Fig. III-3) 150-ml Pyrex beaker 100-ml product bottle
2. **Open irradiation can and transfer target to beaker under hot off-gas scrubber assembly.**	See opening procedure, p. 12.
3. **Dissolve target material in a minimum amount of aqua regia.**	Low heat increases rate of dissolution.
4. **Evaporate to near dryness to remove excess HNO_3.**	Do not bake. Selenous acid decomposes readily to volatile SeO_2.
5. **Adjust volume to 50 ml of 1 *M* HCl and transfer to product bottle.**	Product solution should be clear and water-white.
6. **Sample and analyze for:** **Molarity of HCl** **Total solids** **^{75}Se concentration** **Radiochemical purity**	Refer to *ORNL Master Analytical Manual* (TID-7015), procedure No. 9 0733761.

SILVER-110 AND -110*m*

Production method:

$$^{109}Ag(n,\gamma)^{110m}Ag \xrightarrow[249\ d]{IT \rightarrow} {}^{110}Ag$$

Half-life: ^{110m}Ag 249 days
^{110}Ag 24.2 sec

Cross section:	2 barns
Target:	Silver metal
Target weight:	1.0 g
Neutron flux:	2×10^{14} neutrons cm^{-2} sec^{-1}
Irradiation time:	174 weeks
Reactor yield:	3.3 curies
Processing yield:	>95%
Radiochemical purity:	>98%

Radiations:

Beta	Gamma[1]	Other
0.087 (~58%)	0.116	IT
0.53 (~35%)	0.656	
2.12 (~3%)	0.885 (81%)	
2.86 (~3%)	1.389 (33%)	
	1.516 (17%)	

Processing facility and shielding required: manipulator cell, 4 in. lead equivalent

---

1. **Prepare equipment.**
   Hot off-gas scrubber unit (Fig. III-3).
   150-ml Pyrex beaker
   100-ml product bottle
2. **Open irradiation can and transfer target into beaker under hot off-gas scrubber assembly.**
   See opening procedure, p. 12.
3. **Dissolve target in minimum amount of 16 *M* HNO_3.**
4. **Adjust volume to 50 ml of 1 *M* HNO_3 and transfer to product bottle.**
   Product solution should be clear and water-white.
5. **Sample and analyze for:**
   Molarity of HNO_3
   Total solids
   ^{110}Ag concentration
   Radiochemical purity
   Substances not precipitated with HCl
   Refer to *ORNL Master Analytical Manual* (TID-7015), procedure No. 9 0733781.

SILVER-111

Production method:

$^{110}Pd(n,\gamma)^{111}Pd \xrightarrow[22m]{\beta\rightarrow} {}^{111}Ag$

Half-life: 7.5 days

Cross section:	0.2 barn
Target:	Palladium metal
Target weight:	300 mg
Neutron flux:	2×10^{14} neutrons cm^{-2} sec^{-1}
Irradiation time:	3 weeks
Reactor yield:	60 mc
Processing yield:	>50%

Radiations:

Beta	Gamma
0.7 (8%)	0.243
0.8 (1%)	0.34
1.04 (91%)	

Processing facility and shielding required: manipulator cell, 4 in. lead equivalent

Radiochemical purity
^{111}Ag, >98% (exclusive of ^{110}Ag)
^{110}Ag, <10%

---

1. **Prepare equipment.**	Hot off-gas scrubber unit (Fig. III-3) 150-ml Pyrex beaker 10 mm × 20 cm ion exchange column (Fig. III-4) Two 600-ml Pyrex beakers 100-ml product bottle
2. **Open irradiation can and transfer palladium foil to 150-ml Pyrex beaker under hot off-gas scrubber assembly.**	See opening procedure, p. 12.
3. **Dissolve target in a minimum amount of aqua regia.**	
4. **Evaporate to dryness.**	Nitric acid is expelled.
5. **Add 25 ml of 12 *M* HCl and evaporate to dryness.**	Traces of HNO_3 are removed and $Pb(NO_3)_2$ is converted to $PbCl_2$.
6. **Dissolve chloride residue in 200 ml of 12 *M* HCl.**	
7. **Condition Dowex 2 resin in ion exchange column with several volumes of 12 *M* HCl.**	
8. **Load column with chloride solution and collect effluent.**	Palladium complex remains on resin; ^{111}Ag passes through the column and is collected in 600-ml beakers.
9. **Wash column with an additional 200 to 300 ml of 12 *M* HCl.**	
10. **Evaporate solution from column to ~25 ml.**	Volume is reduced, and excess HCl is expelled.
11. **Add 25 ml of 16 *M* HNO_3 and evaporate to ~0.1 ml. Repeat step.**	Traces of HCl are removed by treatment.

12. Dissolve ^{111}Ag product in 50 ml of 2 *M* HNO_3 and transfer to product bottle.

Product should be clear and water-white.

13. Sample and analyze for:
    - Total solids
    - Molarity of HNO_3
    - ^{111}Ag concentration
    - Radiochemical purity

Refer to *ORNL Master Analytical Manual* (TID-7015), procedure No. 9 0733783.

SODIUM-24

Production method:	$^{23}Na(n,\gamma)^{24}Na$	Half-life:	15.05 hr
Cross section:	0.53 barn	Radiations:	
Target:	Na_2CO_3	Beta	Gamma
Target weight:	250 mg	1.39 (~100%)	1.368 (~100%)
Neutron flux:	1×10^{13} neutrons cm^{-2} sec^{-1}		2.754 (~100%)
Irradiation time:	60 hr	Processing facility and shielding required: manipulator cell, 6 in. lead equivalent	
Reactor yield:	250 mc		
Processing yield:	>90%		
Radiochemical purity:	>99%		

1. **Prepare equipment.**	Hot off-gas scrubber unit (Fig. III-3) 150-ml Pyrex beaker 100-ml product bottle
2. **Open irradiation can and transfer target into beaker under hot off-gas scrubber assembly.**	See opening procedure, p. 12.
3. **Add 12 *M* HCl dropwise (to minimize effervescing) and heat until all target material is dissolved.**	Addition of HCl dropwise minimizes effervescence.
4. **Evaporate to complete dryness.**	Evaporation removes excess HCl.
5. **Dissolve in ~20 ml of distilled H_2O and again evaporate to dryness.**	This step removes traces of HCl.
6. **Adjust volume to 50 ml of distilled H_2O. Transfer solution to product bottle.**	Product solution should be water-white, pH ~7.
7. **Sample and analyze for:** **pH** **Total solids** **^{24}Na concentration** **Radiochemical purity**	Refer to *ORNL Master analytical Manual* (TID-7015), procedure No. 9 0733792.

STRONTIUM-85

Production method:	$^{84}Sr(n,\gamma)^{85}Sr$	Half-life:	64.0 days
Cross section:	1 barn	Radiations:	
Target:	$Sr(NO_3)_2$, enriched to ~34% ^{85}Sr	Beta	Gamma
		None	0.51 Mev
Target weight:	25 mg	Processing facility and shielding required: manipulator cell or hot hood equipped with hot off-gas facilities, 3 in. lead equivalent	
Neutron flux:	$\sim 2 \times 10^{14}$ neutrons cm^{-2} sec^{-1}		
Irradiation time:	~1 year		
Reactor yield:	~100 mc		
Processing yield:	>95%		
Radiochemical purity:	>98% (exclusive of <1% ^{89}Sr)		

1. **Prepare equipment.**	Hot off-gas scrubber unit (Fig. III-3) 100-ml product bottle 150-ml Pyrex beaker
2. **Open irradiation can and transfer target into beaker under hot off-gas scrubber assembly.**	See opening procedure, p. 12.
3. **Dissolve target in ~10 ml of hot 3 *M* HNO_3.**	
4. **Adjust volume to 50 ml of 1 *M* HNO_3 and transfer solution to product bottle.**	Solution should be water-white.
5. **Sample and analyze for:** **Molarity of HNO_3** **Total solids** **^{85}Sr concentration** **^{89}Sr concentration** **Heavy metals** **Radiochemical purity**	Refer to *ORNL Master Analtyical Manual* (TID-7015), procedure No. 9 0733803.

STRONTIUM-90–YTTRIUM-90

Production method: Fission

$^{90}Sr \xrightarrow{\beta^-} {}^{90}Y$

Fission yield: 5.9%

Target: U-Al alloy

Radiochemical purity:
^{90}Sr >99% (exclusive of ^{89}Sr)
^{89}Sr <10%
^{90}Y (in equilibrium)

Half-life: ^{90}Sr 28 years
^{90}Y 64.4 hr

Radiations:

Isotope	Beta	Gamma
^{90}Sr	0.61	None
^{90}Y	2.18	None

Processing facility and shielding required: manipulator cell, 6 in. lead equivalent

Source of Material

The current feed material is highly purified $^{90}SrCO_3$ from Hanford Atomic Products Operation. This is converted to $^{90}SrTiO_3$ for use in sources.

Refer to *Isotopes and Radiation Technology* 1(1): 35–43 (Fall, 1963).

Strontium-90 carbonate is dissolved in dilute HNO_3, TiO_2 (as a dry powder) is slurried into the solution, and ^{90}Sr is precipitated onto the TiO_2 by adding $(NH_4)_2CO_3$. (A ratio of titanium element to the total alkaline earths in the ^{90}Sr solution of 1.05 is used to calculate the amount of TiO_2 to be used.) The precipitate is filtered on a sintered-glass filter, placed in a platinum boat, and calcined at 1100°C for 4 hr to convert it to $^{90}SrTiO_3$.

Processing

1. **Prepare equipment.**

   Extractor (Fig. III-6)
   Three 600-ml Pyrex beakers
   Hot plate
   Sintered-glass funnel
   Whatman No. 1 filter paper
   100-ml product bottle

2. **Add 100 ml of 6 *M* HCl to ~5 g of $^{90}SrTiO_3$ and leach for ~15 min.**

   Keep temperature just below boiling.

3. **Adjust volume to 200 ml with distilled H_2O, and filter the solid on filter paper. Repeat if necessary to yield a clear solution.**

4. **Flush TiO_2 precipitate into a beaker with H_2O and leach second time. Refilter. Discard TiO_2 precipitate.**

   Strontium-90 remains in solution.

5. **Transfer solution to extractor and add enough fuming HNO_3 to the solution to bring acidity up to ~65%.**
   (*a*) **If $Sr(NO_3)_2$ does not precipitate at this concentration, carefully add more HNO_3 until precipitate forms.**
   (*b*) **Agitate ~5 min after precipitate appears.**

   Strontium-90 nitrate is insoluble in ~65% HNO_3. Yttrium-90 daughter and many other ions remain in solution.

   Agitate the solution during the HNO_3 addition by drawing air up through the filter disk.

6. Filter insoluble nitrate. Discard HNO_3 solution.	Strontium-90 nitrate remains on disk.
7. Add 50 ml of distilled H_2O to extractor and agitate 5 to 10 min. Transfer solution to a clean beaker.	Strontium-90 nitrate is soluble in H_2O.
8. Repeat step 5.	This further purifies ^{90}Sr.
9. Repeat step 6. Discard HNO_3 solution.	
10. Remove $^{90}Sr(NO_3)_2$ water solution to evaporation flask. Fume twice with concentrated HNO_3.	Organic material is removed.
11. Fume twice with concentrated HCl.	Nitric acid is removed, and $^{90}SrCl_2$ is formed.
12. Add 400 ml of 1 *M* HCl to $^{90}SrCl_2$, and transfer to product bottle.	
13. Sample and analyze: Molarity of HCl Total solids Heavy metals Radiochemical purity ^{90}Sr concentration	Refer to *ORNL Master Analytical Manual* (TID-7015), procedure No. 9 0733801.

SULFUR-35
(as H_2SO_4)

Production method:	$^{35}Cl(n,p)^{35}S$	Half-life:	89.0 days
Cross section:	0.26 barn	Radiations:	
Target:	KCl	Beta	Gamma
Radiochemical purity:	^{35}S, >99% ^{32}P, <0.1%	0.167	None
		Processing facility and shielding required: hot hood	

1. **Prepare equipment.**	2 to 3 liter distillation equipment (Fig. III-2) Ion exchange column (Fig. III-4) 600-ml Pyrex beaker 100-ml product bottle
2. **Open irradiation can and remove sample.**	See opening procedure, p. 12.
3. **Transfer irradiated sample into beaker and dissolve in ~200 ml of distilled H_2O.**	If $^{38,39}Ar$ is to be recovered, the dissolution should be carried out in a closed system. See ^{37}Ar procedure.
4. **Dilute to 1 liter with distilled H_2O before loading solution on ion exchange column.**	
5. **Prepare ion exchange column with Amberlite IR-120 resin by washing column with 6 *M* HCl followed by a water wash until column effluent is neutral.**	Column should contain ~50% excess capacity.
6. **Transfer KCl-H_2O solution into head flask and adjust column flow rate to ~1 ml/min.**	Potassium ions remain on column; ^{36}Cl and ^{35}S pass through column as H_2SO_4 and HCl.
7. **Wash column with 1 liter of H_2O.**	This step ensures complete removal of ^{36}Cl and ^{35}S.
8. **Place effluents from steps 6 and 7 into distillation equipment.**	
9. **Heat flask. Discard distillate until HCl appears (in distillate).**	Removal of HCl is determined by testing with litmus paper.
10. **After acid appears in distillate, continue distillation until no more than 0.5 ml remains in boiling flask.**	Removal of last traces of HCl without loss of H_2SO_4 is attempted in this step. The flask, therefore, should not be permitted to become dry. Sulfur is recovered from the distillation residue after removal of ^{36}Cl.
11. **Add 10 ml of 16 *M* HNO_3 to boiling flask and fume to near dryness. Repeat three times.**	This step removes organic material. Do not evaporate to dryness because ^{35}S will be lost.

12. Add 10 ml of 12 *M* HCl and fume. Repeat three times.	Nitric acid is removed. Do not take to dryness.
13. Adjust volume to 50 ml with H_2O and transfer to product bottle.	Solution contains ^{35}S as H_2SO_4 in HCl.
14. Sample and analyze for: Total solids Molarity of HCl Radiochemical purity ^{35}S concentration	Refer to *ORNL Master Analytical Manual* (TID-7015), procedure No. 9 0733811.

SULFUR-35

[as BaS in $Ba(OH)_2$]

Production method:	Conversion	Half-life:	89.0 days
Radiochemical purity:	^{35}S, >99% ^{32}P, negligible	Radiations:	
		Beta	Gamma
		0.167	None

Processing facility and shielding required: hot hood

Source of Material

Two curies of ^{35}S as H_2SO_4 in HCl are treated with $BaCl_2$ solution to yield $BaSO_4$.	See ^{35}S procedure.

Processing

1. Prepare equipment.	See Figs. III-10 and III-19. Platinum boat Filter paper
2. Filter $BaSO_4$ on a fine filter paper and wash with water. Discard filtrate.	
3. Place filter paper containing precipitate into a platinum boat and heat in a quartz tube under a stream of hydrogen for ~16 hr at red heat.	Precipitate and paper may be folded to fit into the boat. This step converts $BaSO_4$ to BaS.
4. Transfer platinum boat containing BaS to the gas-generation flask and add sufficient concentrated H_3PO_4 to cover the boat.	Hydrogen sulfide is generated.
5. Sweep H_2S generated from the flask with a stream of nitrogen at a flow rate of ~1 ml/min into a scrubber containing $Ba(OH)_2$ solution.	Protect from air at all times to prevent conversion of the sulfide to sulfate or formation of $BaCO_3$ in scrubber solution.
6. When H_2S generation is complete, as shown by cessation of bubbles from the platinum boat, sweep the gas generator with helium for an additional hour and valve off the scrubber system.	
7. Hold solution in the scrubber as a storage container for the ^{35}S product.	Observe for precipitate in scrubber solution indicating sulfate or carbonate.
8. Sample solution and analyze for: Total solids ^{35}S concentration Radiochemical purity Nonsulfide sulfur Molarity of $Ba(OH)_2$	Refer to *ORNL Master Analytical Manual* (TID-7015), procedure No. 9 0733811.
9. Package in sealed ampules evacuated and filled under helium atmosphere.	

UNCLASSIFIED
ORNL-DWG 64-3308

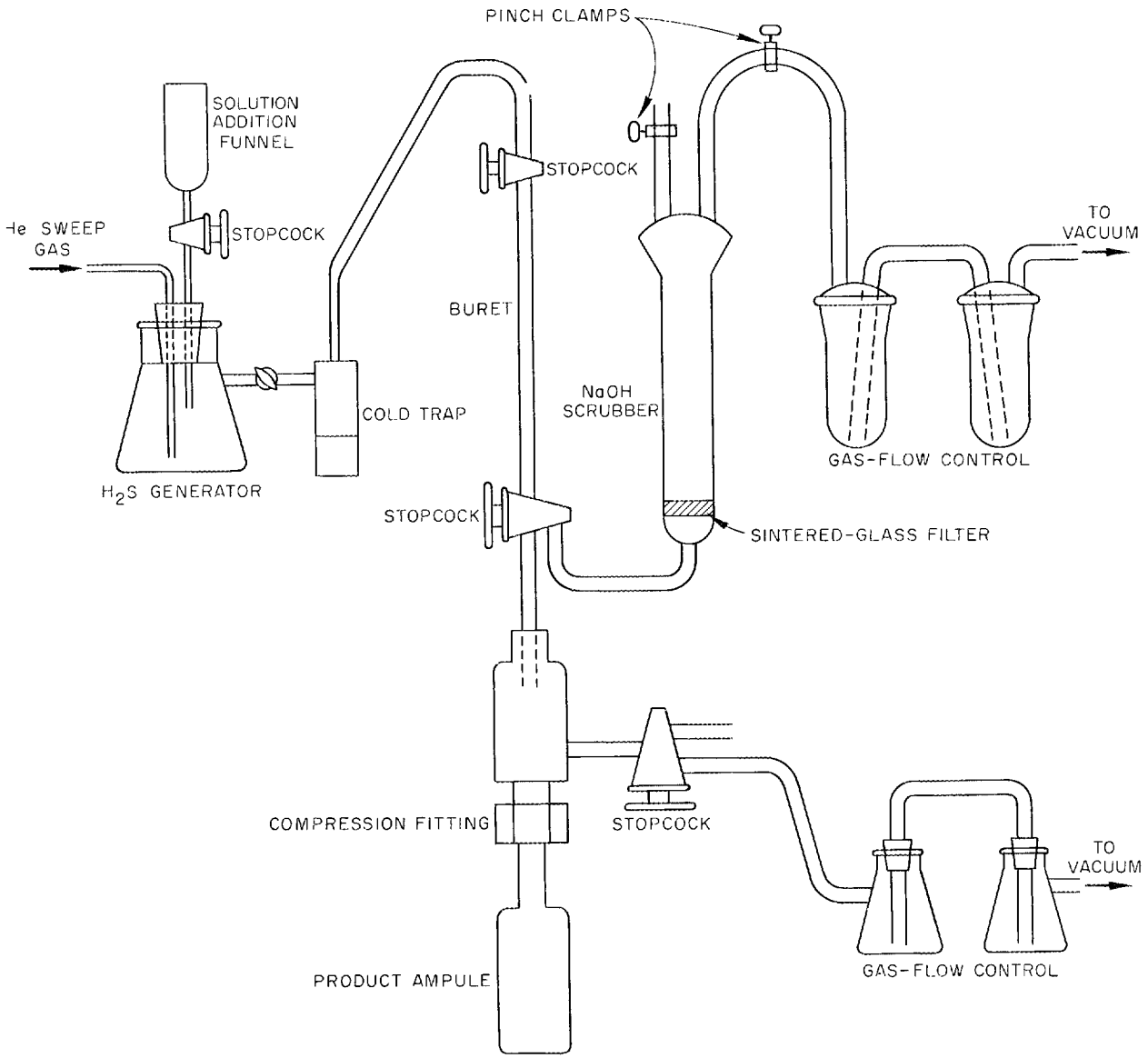

Fig. III-19. Sulfur-35–Barium Sulfide Conversion Equipment.

SULFUR-35

(as Elemental Sulfur in Benzene)

Production method:	Conversion	Half-life:	89.0 days
Processing yield:	80%	Radiations:	
Radiochemical purity:	>99%	Beta	Gamma
		0.167	None

Processing facility and shielding required: hot hood

1. Prepare BaS by ^{35}S procedure.	See $Ba^{35}S$ procedure, steps 1 to 4.
2. Prepare equipment.	See Fig. III-20. 100-ml product bottle
3. Load BaS into the reaction flask to generate H_2S.	
4. Add enough concentrated H_3PO_4 to the reaction flask to cover the boat containing BaS. Sweep with helium at a flow rate of ~1 ml/min.	The H_2S generated is transferred to a cold trap maintained at liquid-nitrogen temperature, where the H_2S is collected.
5. Valve off reaction flask at the completion of the H_2S generation.	Cold trap is isolated.
6. Evacuate the H_2S gas receiver and warm trap to release H_2S to the gas receiver.	Residual H_2O and H_3PO_4 remain in trap.
7. Recycle H_2S.	Note: Conversion to elemental sulfur depends upon decomposition of the H_2S in a glow discharge formed between two platinum electrodes in a low-pressure chamber. A Tesla coil is used as a high-voltage power supply. The chamber is maintained at low pressure by pumping with a high vacuum pump. A cold trap is installed between the pump and chamber to recover H_2S that is not decomposed in the arc chamber. Elemental sulfur collects on the sides of the arc chamber and on the electrodes. Hydrogen sulfide gas collected in cold trap between chamber and pump is recycled back to the gas receiver by evacuating the receiver and warming the cold trap.
8. Repeat recycle until all H_2S is decomposed to elemental sulfur.	
9. Wash elemental sulfur from arc chamber and electrodes with warm benzene and transfer to product bottle.	
10. Sample and analyze for: ^{35}S concentration Radiochemical purity	Refer to *ORNL Master Analytical Manual* (TID-7015), procedure No. 9 0733811.

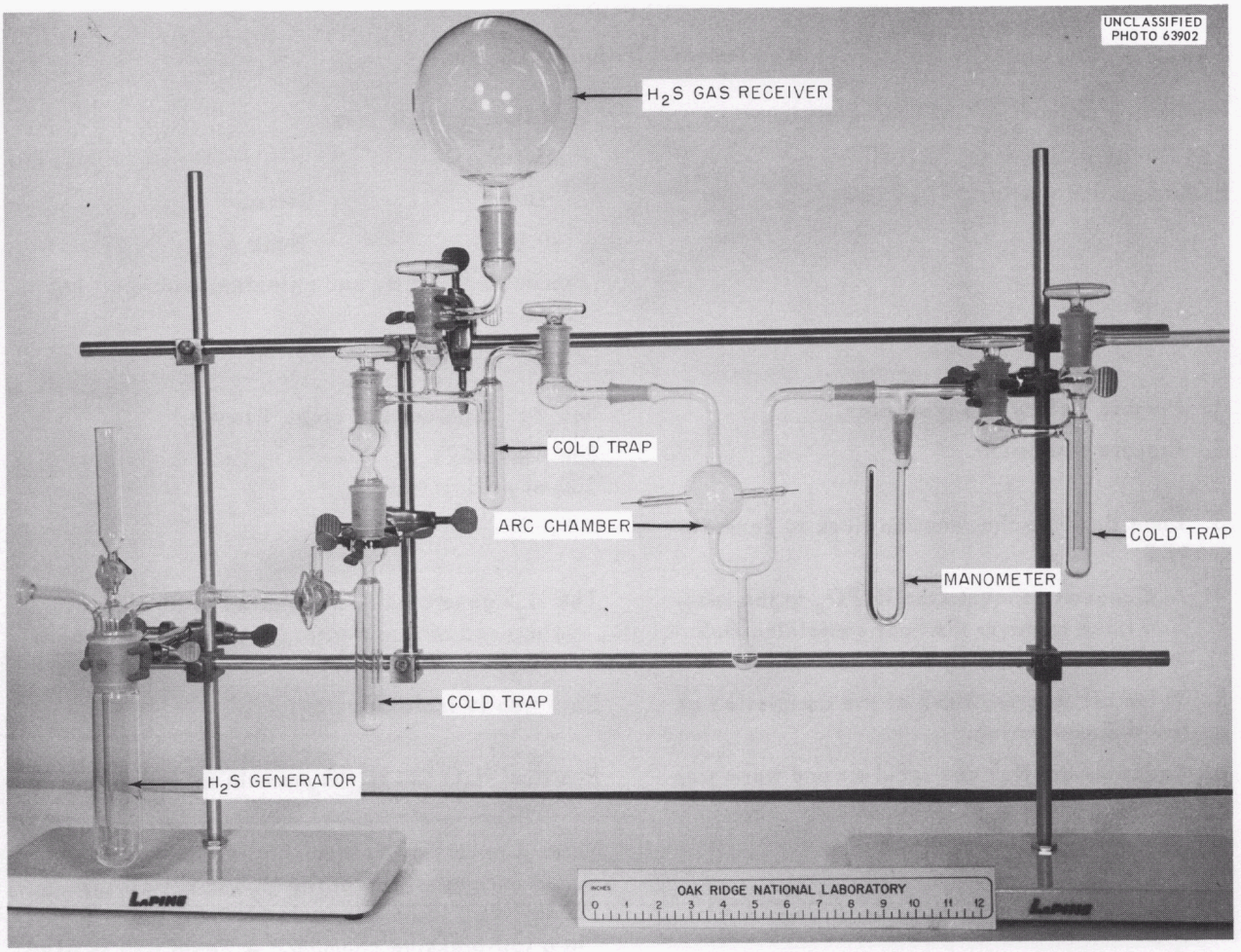

Fig. III-20. Elemental ^{35}S Conversion Equipment.

TANTALUM-182

Production method:	$^{181}Ta(n,\gamma)^{182}Ta$	Half-life:	115.1 days
Cross section:	21 barns	Radiations:	
Target:	Tantalum metal	Beta	Gamma [1]
Target weight:	10 mg	0.525	0.066
Neutron flux:	2×10^{14} neutrons cm^{-2} sec^{-1}		0.152
			0.222
Irradiation time:	1 year		1.223
Reactor yield:	1.2 curies	Processing facility and shielding required: manipulator cell, 4 in. lead equivalent	
Processing yield:	>60%		
Radiochemical purity:	>99%		

1. Prepare equipment.	100-ml platinum dish 150-ml Pyrex beaker Hot off-gas scrubber unit (Fig. III-3) Tube furnace (Fig. III-10) 60-mm filtering funnel 100-ml polyethylene product bottle Whatman No. 40 filter paper
2. Open irradiation can and transfer target into a platinum dish under hot off-gas scrubber assembly.	See opening procedure, p. 12.
3. Cover target material with at least ten times its weight of anhydrous K_2CO_3.	
4. Transfer the dish into furnace, raise the temperature to 1000°C, and fuse for 1 hr.	
5. Cool melt and dissolve in ~50 ml of 1 *M* KOH.	Low heat and agitation increase the rate of dissolution.
6. Filter through paper.	
7. Adjust volume to 50 ml of 1 *M* KOH solution and transfer to polyethylene bottle.	Product solution should be clear and water-white.
8. Sample and analyze for: **Normality of KOH** **Total solids** **^{182}Ta concentration** **Radiochemical purity**	Refer to *ORNL Master Analytical Manual* (TID-7015), procedure No. 9 0733821.

THALLIUM-204

Production method:	$^{203}Tl(n,\gamma)^{204}Tl$	Half-life: 3.57 years		
Cross section:	11 barns	Radiations:		
Target:	Thallium metal	Beta	Gamma	Other
Target weight:	10 g	0.765 (~98%)	None	EC (~2%)
Neutron flux:	2×10^{14} neutrons cm^{-2} sec^{-1}	Processing facility and shielding required: manipulator cell or hot hood equipped with hot off-gas facilities, 2 in. lead equivalent		
Irradiation time:	2 years			
Reactor yield:	12 curies			
Processing yield:	>90%			
Radiochemical purity:	>99%			

1. Prepare equipment.	Hot off-gas scrubber unit (Fig. III-3) 150-ml Pyrex beaker 100-ml product bottle
2. Open irradiation can and transfer target into a beaker under hot off-gas scrubber assembly.	See opening procedure, p. 12.
3. Cover target with distilled H_2O and heat to near boiling. Add 16 *M* HNO_3 dropwise to dissolve the target.	
4. Adjust volume to 50 ml of 3 *M* HNO_3 and transfer to 100-ml product bottle.	Product solution should be water-white. If it is not, filter through medium sintered-glass filter.
5. Sample and analyze for: **Molarity of HNO_3** **Total solids** **^{204}Tl concentration** **Radiochemical purity**	Refer to *ORNL Master Analytical Manual* (TID-7015), procedure No. 9 0733861.

THULIUM-170

Production method:	$^{169}Tm(n,\gamma)^{170}Tm$	Half-life:	129 days
Cross section:	125 barns	Radiations:	
Target:	Tm_2O_3	Beta	Gamma
Target weight:	0.2 g	0.968 (76%)	0.084 (from IT in ^{170}Yb daughter)
Neutron flux:	$\sim 2 \times 10^{14}$ neutrons cm^{-2} sec^{-1}	0.884 (24%)	
Irradiation time:	~60 weeks	Processing facility and shielding required: manipulator cell, ~6 in. lead equivalent	
Reactor yield:	~120 curies		
Processing yield:	>95%		
Radiochemical purity:	99% (^{171}Tm also present)		

1. Prepare equipment.	Hot off-gas scrubber unit (Fig. III-3) 150-ml Pyrex beaker 100-ml product bottle
2. Open irradiation can and transfer contents to beaker under hot off-gas scrubber assembly.	See opening procedure, p. 12.
3. Add ~10 ml of 12 *M* HCl to dissolve target.	Heat as necessary to dissolve target completely.
4. Adjust volume to 50 ml with distilled H_2O and transfer to product bottle.	Solution should be clear and slightly green.
5. Sample and analyze for: **Molarity of HCl** **Total solids** **^{170}Tm concentration** **Radiochemical purity**	Refer to *ORNL Master Analytical Manual* (TID-7015), procedure Nos. 9 0732005, 9 002302, and 9 0733002.

TIN-113

Production method:	$^{112}Sn(n,\gamma)^{113}Sn$	Half-life: 119 days		
Cross section:	1.3 barns	Radiations:		
Target:	Tin foil	Beta	Gamma	Other
Target weight:	10 g	None	0.393	EC
Neutron flux:	2×10^{14} neutrons cm^{-2} sec^{-1}	Processing facility and shielding required: manipulator cell, 6 in. lead equivalent		
Irradiation time:	1 year			
Reactor yield:	1 curie			
Processing yield:	>90%			
Radiochemical purity:	>99% (exclusive of ^{113m}In daughter)			

1. Prepare equipment.	200-ml distillation equipment fitted with reflux condenser (Fig. III-2) Tin-filled column (Fig. III-21) Three 150-ml Pyrex beakers 100-ml product bottle
2. Open irradiation can and transfer target to a distillation flask fitted with reflux condenser.	See opening procedure, p. 12.
3. Add 10 to 12 ml of cold 12 *M* HCl through separatory funnel.	Tin target requires ~8 hr to dissolve.
4. Transfer solution from flask to beaker and adjust volume to 3 to 4 *M* HCl with distilled water.	Use flask rinse for dilution.
5. Prepare column of 30-mesh tin metal, wash tin with 4 *M* HCl and then with H_2O.	
6. Pass dissolved target solution through tin column.	This step removes ^{125}Sb and ^{125}Te.
7. Collect effluent from column.	Solution contains ^{113}Sn.
8. Rinse column with one column volume of H_2O.	
9. Combine solutions from steps 7 and 8 and transfer to product bottle.	
10. Sample and analyze for: **Molarity of HCl** **^{113}Sn concentration** **Radiochemical purity** **Total tin**	Refer to *ORNL Master Analytical Manual* (TID-7015), procedure No. 9 0733891.

UNCLASSIFIED
ORNL-DWG 64-3309

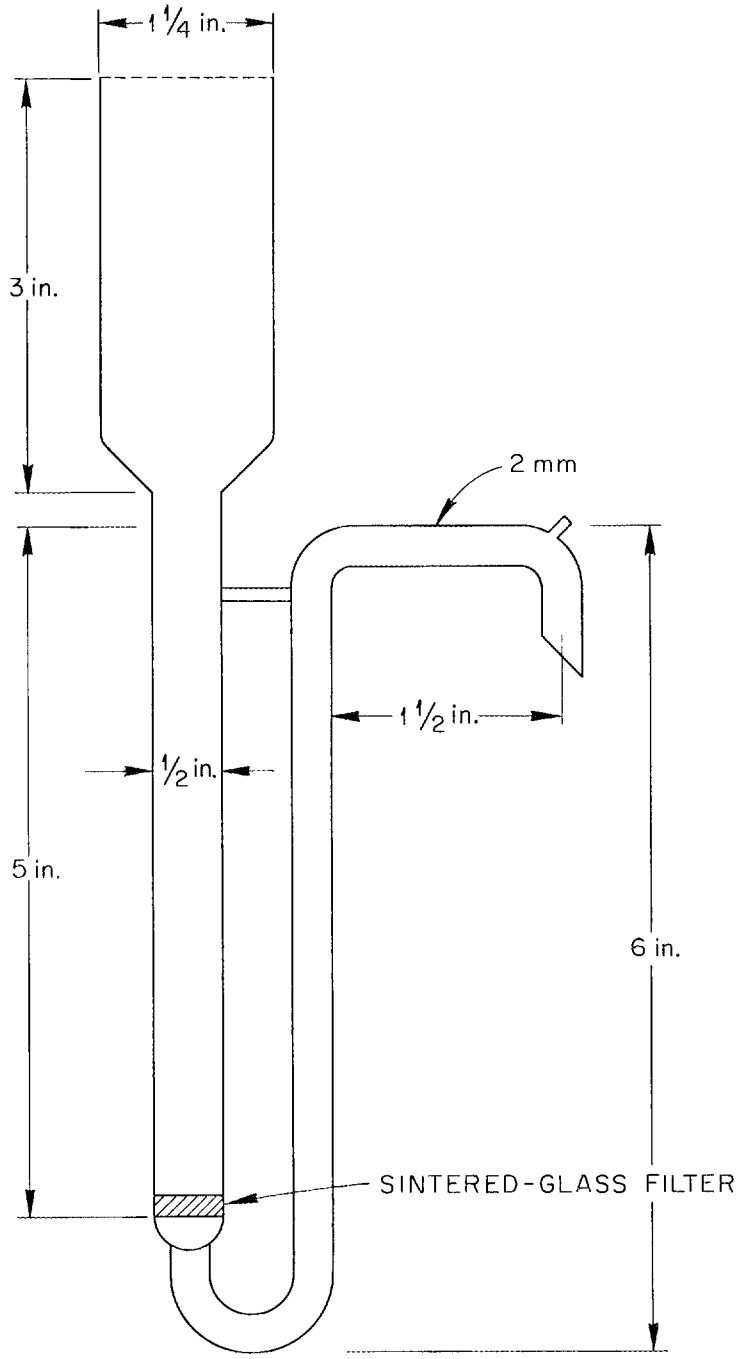

Fig. III-21. Ion Exchange Column with Sintered-Glass Resin Support.

TUNGSTEN-185

Production method:	$^{184}W(n,\gamma)^{185}W$	Half-life:	75.8 days
Cross section:	22 barns	Radiations:	
Target:	WO_3	Beta	Gamma
Target weight:	100 mg	0.428	None
Neutron flux:	2×10^{14} neutrons cm^{-2} sec^{-1}	Processing facility and shielding required: manipulator cell, 3 in. lead equivalent	
Irradiation time:	1 year		
Reactor yield:	800 mc		
Processing yield:	>95%		
Radiochemical purity:	>99%		

1. Prepare equipment.	Hot off-gas scrubber unit (Fig. III-3) 150-ml Pyrex beaker 100-ml product bottle
2. Open irradiation can and transfer target material into beaker under hot off-gas scrubber assembly.	See opening procedure, p. 12.
3. Dissolve target in minimum amount of concentrated NH_4OH and 5 ml of 5% K_2CO_3.	Warm but do not boil.
4. Adjust volume to 50 ml with distilled H_2O and transfer to product bottle.	Product solution should be water-white.
5. Sample and analyze for: **Molarity of NH_4OH** **Total solids** **Radiochemical purity** **^{185}W concentration** **^{181}W concentration**	Refer to *ORNL Master Analytical Manual* (TID-7015), procedure No. 9 0733911.

TUNGSTEN-187

Production method:	$^{186}W(n,\gamma)^{187}W$	Half-life:	24.0 hr
Cross section:	40 barns	Radiations:	
Target:	WO_3	Beta	Gamma[1]
Target weight:	50 mg	0.63 (70%)	0.072
Neutron flux:	1×10^{13} neutrons cm^{-2} sec^{-1}	1.33 (30%)	0.480
			0.780
Irradiation time:	60 hr	Processing facility and shielding required: manipulator cell, 2 in. lead equivalent	
Reactor yield:	400 mc		
Processing yield:	>95%		
Radiochemical purity:	>98%		

1. Prepare equipment.	Hot off-gas scrubber unit (Fig. III-3) 100-ml product bottle 150-ml Pyrex beaker
2. Open irradiation can and transfer target into beaker under hot off-gas scrubber assembly.	See opening procedure, p. 12.
3. Add sufficient 1 *M* KOH solution to beaker to cover sample and heat gently until dissolved.	
4. Adjust volume to 50 ml with 1 *M* KOH solution and transfer to product bottle.	Solution should be clear and water-white.
5. Sample and analyze for: **Molarity of KOH** **Total solids** **^{187}W concentration** **Radiochemical purity**	Refer to *ORNL Master Analytical Manual* (TID-7015), procedure No. 9 0733912.

XENON-133

Production method:	Fission	Half-life:	5.27 days
Fission yield:	6.5%	Radiations:	
Target:	U-Al alloy	Beta	Gamma
Irradiation time:	4 weeks	0.345 (100%)	0.081 (100%)
Radiochemical purity:	>99%; contains trace quantities of atmospheric gases, ^{85}Kr, ^{135}Se, and $^{131m2}Xe$.	Processing facility and shielding required: remote fixed equipment, 3 in. lead equivalent	

Source of Material

Xenon-133 is released from the U-Al ring used for the production of ^{131}I when the aluminum is dissolved. The ^{131}I equipment and the ^{133}Xe equipment are connected so that the ^{133}Xe may be trapped and purified.

Processing

1. Prepare equipment.	Fixed equipment (Fig. III-22)
2. Open valve 1 from ^{131}I cell. By-pass charcoal columns 1 and 2 and storage vessel by opening valves 2, 4, 9, 12, and 14. Turn on vacuum pump. Maintain vacuum of 5 in. H_2O on ^{131}I dissolver.	
3. Begin NaOH dissolution of U-Al ring. Heat dissolver to boiling.	See ^{131}I procedure, step 6.
4. Keep a close check on ion chamber reading. Soon after dissolver reaches 100°C, ^{133}Xe will begin to show on the ion chamber.	
5. As soon as the ^{133}Xe activity reaches ~20% on scale 5 (most sensitive scale), open column inlet and outlet valves (5,6) and close column 1 bypass (4). Begin sorbing ^{133}Xe on previously cooled column 1.	Column 1 is cooled to approximately −200°C with liquid N_2. Charcoal columns must be kept below −50°C to ensure ^{133}Xe sorption.
6. About every 15 min, momentarily open column 1 bypass (4) and take reading on ion chamber. Record.	The amount of ^{133}Xe being evolved from the alloy ring is determined by this step.
7. Stop trapping when ion chamber drops to ~20% on scale 5.	One hour is usually required for the bulk of the ^{133}Xe to be evolved.
8. Shut off vacuum pump. Close valves 1 and 2 to dissolver. Drain liquid N_2 from column 1 Dewar flask. Open column 2 bypass (9). Leave valves 12 and 14 open. Open valve 13. Allow column 1 to warm up. While warming, begin a 5-cfm helium flow through column 1 by opening valve 3.	Helium will elute any air, CO_2, H_2, and some nitrogen oxides while column 1 is warming up, thus beginning the ^{133}Xe purification. Xenon-133 does not begin to elute until the charcoal is a few degrees below 0°C.

9. Cool column 2 to −200°C.	
10. Watch the ion chamber closely as the temperature of column 1 nears 0°C. When the ion chamber reading reaches ~20% on scale 5, open column 2 inlet and outlet valves (8, 10) and close bypass (9).	Begin trapping ^{133}Xe on column 2.
11. At intervals of about 15 min, momentarily open column 2 bypass (9) and take an ion chamber reading. Record.	The amount of ^{133}Xe being eluted is determined.
12. Stop elution when ion chamber drops to about 20% on scale 5.	From 2 to 2½ hr are required to elute the ^{133}Xe from column 1 to column 2.
13. Shut off helium. Close valve 3. Close off column 1 (5, 6). Close valves 8 and 9. Drain liquid N_2 from column 2 Dewar flask. Watch column 2 temperature closely as it warms.	
14. Close valve 13. Open valves 7 and 11. Turn on vacuum pump and pump storage tank cold trap and column 2 down to ~50 to 60 μ. Add liquid N_2 to storage tank Dewar flask. Add liquid N_2 to cold trap Dewar.	Cool to approximately −200°C.
15. When storage tank is pumped down to ~50 to 60 μ, close valves 7 and 11. Continue pumping on column 2.	
16. When the temperature of column 2 approaches −20°C, closely watch ion chamber reading. When the ion chamber shows an activity of ~40 to 50% on scale 5, close valve 12 and open valve 11.	Begin condensing ^{133}Xe on walls of storage tank.
17. While the ^{133}Xe is condensing on the storage tank walls, the flow is not through the ion chamber. However, it is dead-ended in the header and open to some ^{133}Xe activity. To determine when the pressure in the storage tank reaches the point when no more ^{133}Xe is condensing out, close the discharge valve from column 2.	If the storage tank is still condensing out ^{133}Xe, the ion chamber reading in the header will drop.
18. When the storage tank stops condensing out ^{133}Xe, close valve 11. After about 5 min, open valve 7 and pump the storage tank as low as it will go, first making sure it is approximately −200°C. Close valve 7.	The waiting period ensures that all gaseous ^{133}Xe is condensed out.
19. Open valve 11 and condense out more ^{133}Xe in storage tank.	
20. Repeat steps 18 and 19 until all ^{133}Xe is off column 2.	Five to six alternate pumpings and condensations may be necessary.
21. Close valves 9, 11, and 7.	Xenon-133 in storage tank is of product quality and ready for shipment.

22. Using the volume of the header, the ion chamber reading, and the header pressure (as indicated by pressure gage P-2), fill customer's container to desired concentration by connecting it to the system at valve 15 and pumping it down while cooling with liquid N_2. This allows the ^{133}Xe from the header to condense into the container.

The volume of the header between valves 12 and 9 and 10 and 11 is known. The ion chamber in the header has been calibrated so that when the storage tank is at room temperature and opened to the previously evacuated header, a factor can be used which will convert the ion chamber reading to the number of curies of ^{133}Xe in the header.

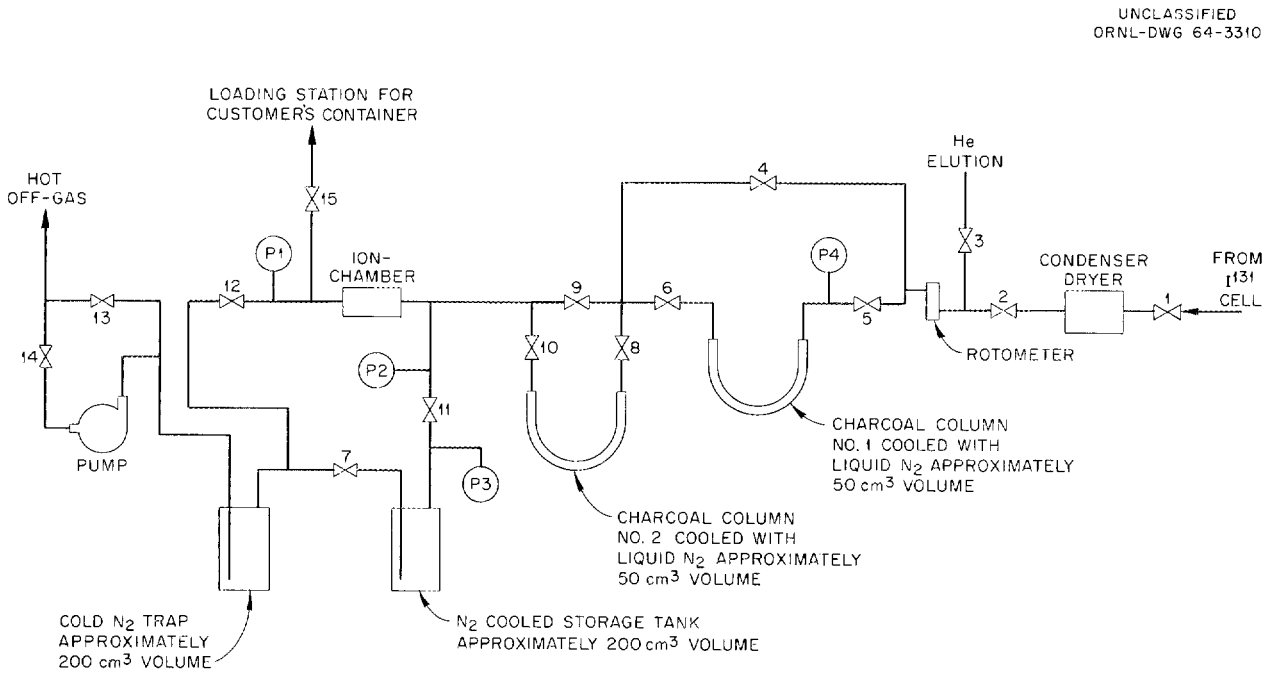

Fig. III-22. Flow Diagram for ^{133}Xe Purification.

YTTRIUM-90

Production method:	Fission, separated from ^{90}Sr	Half-life: 64.4 hr	
	$^{90}Sr \xrightarrow[28y]{\beta^{-}} {}^{90}Y$	Radiations:	
		Beta	Gamma
		2.18	None
Fission yield:	5.9%	Processing facility and shielding required: manipulator cell, 6 in. lead equivalent	
Radiochemical purity:	99.9%		

1. Prepare equipment.	100-ml separatory funnel Two 250-ml Pyrex beakers Two 150-ml Pyrex beakers Hot plate Ten 100-ml product bottles
2. Equilibrate 25 ml of di-2(ethylhexyl) phosphoric acid (HDEHP) (10 ml HDEHP and 15 ml Amsco 120) with 25 ml of 0.1 *M* HCl by manually shaking together in separatory funnel. Save organic phase. Discard aqueous phase.	This step adjusts acidity of HDEHP to ~0.1 *M* HCl.
3. Add 25 ml of 0.1 *M* HCl solution of ^{90}Sr-^{90}Y to the 25 ml of organic phase in separatory funnel. Manually shake mixture for ~5 min. Let phases settle out.	Yttrium-90 extracts into organic phase and ^{90}Sr into aqueous phase. See ^{90}Sr procedure for preparation of ^{90}Sr feed solution.
4. Drain off bottom phase (aqueous) to clean bottle. Save.	Organic phase contains ^{90}Y and some ^{90}Sr contamination.
5. Wash organic phase four times with 25 ml of 0.1 *M* HCl each time. Shake funnel. Allow to settle and drain off aqueous phase into same bottle from step 4 each time.	Washing removes most of ^{90}Sr contaminant. Save bottle with original separation plus washes. This can be used after two to three weeks for another ^{90}Y separation after ^{90}Y appears again.
6. Add 25 ml of 6 *M* HCl to funnel. Shake for ~5 min. Settle. Draw off aqueous phase.	Aqueous solution contains most of ^{90}Y.
7. Repeat step 6. Discard organic phase.	This removes remainder of ^{90}Y.
8. Boil down aqueous solution to dryness. Adjust volume to 25 ml with 0.1 *M* HCl.	This removes acid.
9. Use new glassware, and repeat steps 2 through 8.	The ^{90}Sr contaminant is further reduced.
10. Fume twice with 25 ml of concentrated HNO_3.	Organic matter is destroyed.
11. Fume twice with concentrated HCl.	Yttrium-90 is converted to $^{90}YCl_3$ and HNO_3 removed.
12. Adjust volume to 25 ml with 1.0 *M* HCl and transfer to 100-ml product bottle.	
13. Sample and analyze for: ^{90}Y concentration Total solids Molarity of HCl ^{90}Sr concentration Heavy metals	Refer to *ORNL Master Analytical Manual* (TID-7015), procedure No. 9 0733960.

YTTRIUM-91, PROMETHIUM-147, NEODYMIUM-147, PRASEODYMIUM-143, AND CERIUM-141 AND -144

Production method: Fission

Fission yield:

^{91}Y	5.9%
^{147}Pm	2.6%
^{147}Nd	2.6%
^{143}Pr	6.2%
^{141}Ce	6.0%
^{144}Ce	6.1%

Target: U-Al alloy

Irradiation time: 4 weeks

Radiochemical purity:

^{91}Y	99%
^{147}Pm	>99%
^{147}Nd	>98%
^{143}Pr	>98%
^{141}Ce	>99% (exclusive of ^{144}Ce and ^{144}Pr)
^{144}Ce	>99% (exclusive of ^{141}Ce)

Half-life:

^{91}Y	59.1 days
^{147}Pm	2.5 years
^{147}Nd	11.06 days
^{143}Pr	13.7 days
^{141}Ce	32.5 days
^{144}Ce	285 days

Radiations:

Isotope	Beta	Gamma
^{91}Y	0.33	1.22 (0.3%)
	1.537	
^{147}Pm	0.223	None
^{147}Nd	0.38 (~25%)	0.091 (27%)
	0.60 (~15%)	0.227 (1%)
	0.83 (~60%)	0.553 (13%)
^{143}Pr	0.932	None
^{141}Ce	0.442 (67%)	0.145 (67%)
	0.581 (33%)	
^{144}Ce	0.17 (30%)	0.034 (weak)
	0.3 (70%)	0.054 (weak)
		0.135 (strong)

Processing facility and shielding required: manipulator cell, 8 in. lead equivalent, minimum

---

1. Prepare equipment.	Hot off-gas scrubber unit (Fig. III-3) Water-jacketed ion exchange column (Fig. III-7) Five small ion exchange columns (Fig. III-21) Six 500-ml Pyrex beakers Twenty-five 100-ml product bottles Electrometer with long lead ion chamber Five sintered-glass funnels 1000-ml vacuum flask
2. Boil filtrate from ^{140}Ba-^{89}Sr fuming nitric acid precipitation containing ~65% HNO_3 to dryness.	Nitric acid is removed. See ^{140}Ba-^{89}Sr procedure, step 3.
3. Adjust volume to 100 ml with ~0.5 *M* HCl. Add to the solution 100 mg of lanthanum as $LaCl_3$ or $La(NO_3)_3$.	Lanthanum is added as carrier for oxalate precipitation.
4. Add oxalic acid crystals (while agitating) until precipitate appears. Filter. Discard filtrate.	Precipitate is lanthanum plus short-lived rare earth oxalates and traces of other ions.
5. Dissolve precipitate in concentrated HNO_3. Fume to dryness until no precipitate forms when distilled H_2O is added.	Rare earth oxalates are difficult to destroy.

6. Take up $La(NO_3)_3$ in 0.1 *M* HCl. Sorb onto hydrogen-form Dowex 50W-X4 (−70 +80 mesh) resin in a 15-mm by 18-in. column at full flow rate. Arrange discharge line from column to pass through ion chamber.	Flat resin top ensures good band formation during loading. Ion chamber is used to monitor activity peaks. The peak which may appear during absorption is due to traces of $^{103-106}Ru$, ^{95}Zr-^{95}Nb, $^{134-137}Cs$, etc., which are carried with lanthanum oxalate.
7. Wash column with 150 ml of distilled H_2O.	Disregard peak.
8. Elute column with degassed 0.2 *M* citric acid buffered at pH 2.8 to 2.9 at rate of 1 drop per 3 sec. Introduce water at 80°C into column jacket 1 hr after start of elution.	Boiling removes dissolved air from citric acid solution. Dissolved air in column must be swept out by degassed eluant before heating column.
9. Collect 100-ml fractions. When ion chamber shows that first peak is being eluted from column, collect in new bottle. When peak is gone, change again.	First peak is ^{91}Y.
10. Continue elution. When second peak begins, change as in step 9.	Second peak is $^{147,148}Pm$.
11. Continue elution. Change bottles for third peak.	Third peak is ^{147}Nd. There may or may not be a a peak on the ion chamber for the next element eluted. This will depend on the amount of activity loaded.
12. Continue changing bottles as they fill.	Fourth peak (very small) is ^{143}Pr. This radioisotope is a pure beta emitter and is difficult to see on the electrometer ion gage.
13. Continue elution. Change fraction bottles for fifth peak.	Fifth peak is $^{141,144}Ce$.
14. Stop column flow.	The only remaining element is ^{140}La with stable carrier.
15. Sample a fraction of each peak. Determine which fractions of each peak are pure.	The ^{147}Nd, ^{143}Pr, $^{141,144}Ce$ must be carefully analyzed since ^{143}Pr is a soft beta emitter and may be hidden by the other activities.
16. Prepare five columns 10 mm × 5 in. Fill with hydrogen-form Dowex 50W-X4 resin.	These columns are used to concentrate each of the five elements (Fig. III-21).
17. To the fractions of ^{91}Y add 1.5 ml of concentrated HCl per 100 ml of fraction. Agitate and dilute to 400 ml with distilled H_2O. Add to small ^{91}Y column. Wash column with 500 ml of distilled H_2O.	Hydrochloric acid breaks citric-^{91}Y complex and permits ^{91}Y to sorb onto resin. The wash removes citric acid.
18. Add 100 ml of 3 *M* HNO_3 to column. Wash with 50 ml of distilled H_2O. Collect in new vessel.	Yttrium is stripped from resin.
19. Boil ^{91}Y-HNO_3 solution to dryness, fume twice with concentrated HNO_3, and fume twice with concentrated HCl.	This step destroys organic compounds and converts ^{91}Y to chloride.
20. Take up in 1.0 *M* HCl for sampling and storage.	

21. **Repeat steps 17 through 20 for each of the fractions of the other four peaks.**

22. **Sample each purified fraction and analyze for:**
    - **Molarity of HCl**
    - **Concentration of desired activity**
    - **Radiochemical purity**
    - **Gross alpha**
    - **Total solids**

The ^{147}Pm, ^{147}Nd, ^{143}Pm, and $^{141,144}Ce$ products are obtained.

Refer to *ORNL Master Analytical Manual* (TID-7015), procedure Nos. ^{91}Y, 9 0733961; ^{147}Pm, 9 0733661; ^{147}Nd, 9 0733511; ^{143}Pr, 9 0733661; and $^{141,144}Ce$ 9 0733181.

ZINC-65

Production method:	$^{64}Zn(n,\gamma)^{65}Zn$	Half-life: 246.4 days		
Cross section:	0.47 barn	Radiations:		
Target:	Zinc metal	Beta	Gamma	Other
Target weight:	1 g	0.325 β^+ (2.5%)	1.12 (51%)	EC (97.5%)
Neutron flux:	2×10^{14} neutrons cm^{-2} sec^{-1}	Processing facility and shielding required: manipulator cell, 4 in. lead equivalent		
Irradiation time:	2.5 years			
Reactor yield:	13 curies			
Processing yield:	>95%			
Radiochemical purity:	>99%			

1. Prepare equipment.	Hot off-gas scrubber unit (Fig. III-3) 150-ml Pyrex beaker 100-ml product bottle
2. Open irradiation can and transfer sample into beaker containing 10 ml of distilled H_2O. Add ~10 ml of 1 to 2 *M* HCl, place beaker under hot off-gas scrubber assembly, and heat gently until all zinc is dissolved.	See opening procedure, p. 12. Do not use concentrated HCl because reaction may become violent.
3. Adjust volume to 50 ml of 1 *M* HCl and transfer to product bottle.	
4. Sample and analyze for: **Molarity of HCl** **Total solids** **^{65}Zn concentration** **Radiochemical purity**	Refer to *ORNL Master Analytical Manual* (TID-7015), procedure No. 9 0733971.

ZIRCONIUM-95–NIOBIUM-95

Production method: Fission

$$^{95}Zr \xrightarrow[65d]{\beta^-} {}^{95}Nb$$

Fission yield: ^{95}Zr 6.4%

Target: U-Al alloy

Radiochemical purity: >97%

Half-life: ^{95}Zr 65 days
^{95}Nb 35 days

Radiations:

Isotope	Beta	Gamma
^{95}Zr	0.364 (54%)	0.722
	0.396 (43%)	0.754
	0.883 (3%)	
^{95}Nb	0.160	0.745

Processing facility and shielding required: manipulator cell, 6 in. lead equivalent

---

1. **Prepare equipment.**	Two ion exchange columns (Fig. III-7) Ten 100-ml product bottles Two 500-ml Pyrex beakers
2. **Prepare 1-in. by 1-ft column with 5 in. of distilled H_2O-washed silica gel.**	
3. **Add uranyl nitrate solution to column (as described in ^{140}Ba-^{89}Sr procedure, but prior to the TBP extraction of the U and Pu) adjusted to 5 to 6 *M* HNO_3. Adjust flow rate to 2 to 3 drops/min.**	This sorbs ^{95}Zr-^{95}Nb. If flow is much faster, Zr-Nb will break through. See ^{140}Ba-^{89}Sr procedure.
4. **Wash column with 150 to 200 ml of 1.5 *M* HNO_3.**	This step removes most of occluded uranium. Save solution and washes from column for processing for other radioisotopes.
5. **Wash column with 100 ml of distilled H_2O to remove excess acid.**	
6. **Add 150 ml of 5% oxalic acid to column. Discharge at a slow rate until column is dry. Wash with an additional 50 ml more of 5% oxalic acid solution.**	This step strips Zr-Nb from silica gel.
7. **Fill 1-in. by 1-ft column with –50 +100 mesh, hydrogen-form Dowex 50W-X12 resin.**	
8. **Add oxalic acid solution containing Zr-Nb to column. Regulate flow to 2 to 3 drops per min. When column goes dry, wash with 50 ml more of oxalic acid.**	Resin retains all cations; Zr-Nb is complexed with oxalic acid and passes through column with eluant.
9. **Collect solution from resin column as product.**	
10. **Sample and analyze for:** **^{95}Zr-^{95}Nb concentration** **Radiochemical purity**	Refer to *ORNL Master Analytical Manual* (TID-7015), procedure No. 9 0733983.

IV. Storage and Shipment of Radioisotopes

In general, after processing, radioisotopes are transferred to the packaging area for sampling, analysis, storage, and shipment. Most of these operations take place behind a common, shielded area; a few low-level products are stored outside of this barrier.

This section describes the area, explains routine procedures in shipment and inventory, and discusses ORNL shipping containers. Isotopes produced at ORNL are listed in Table IV-1.

TABLE IV-1. Radioisotopes Produced – Listed by Half-Life

Half-Life	Radioisotope	Radiation	Half-Life	Radioisotope	Radiation
24.2 s	Silver-110	β,γ	66 h	Antimony-122	β,γ
30 s	Rhodium-106 (Ru^{106})	β,γ	67 h	Molybdenum-99	β,γ
72 s	Indium-114	EC,β^-,β^+,γ	75.4 h	Gold-199	β,γ
2.6 m	Barium-137*m* (Cs^{137})	IT,γ	88.9 h	Rhenium-186	EC,β,γ
17.5 m	Praseodymium-144	β,γ	4.53 d	Calcium-47	β,γ
12.47 h	Potassium-42	β,γ	5.00 d	Bismuth-210	β
12.5 h	Iodine-130	β,γ	5.27 d	Xenon-133	β,γ
12.82 h	Copper-64	EC,β^-,β^+,γ	7.5 d	Silver-111	β,γ
13.6 h	Palladium-109	β,γ	8.05 d	Iodine-131	β,γ
14.1 h	Gallium-72	β,γ	11.06 d	Neodymium-147	β,γ
15.05 h	Sodium-24	β,γ	12.0 d	Barium-131	EC,γ
19.0 h	Iridium-194	β,γ	12.8 d	Barium-140	β,γ
19.2 h	Praseodymium-142	β,γ	13.7 d	Praseodymium-143	β
24.0 h	Mercury-197m_2	EC,IT,γ	14.3 d	Phosphorus-32	β
24.0 h	Tungsten-187	β,γ	16 d	Osmium-191	β,γ
26.8 h	Arsenic-76	β,γ	18.68 d	Rubidium-86	β,γ
35.55 h	Bromine-82	β,γ	27.8 d	Chromium-51	EC,γ
38.7 h	Arsenic-77	β,γ	32.5 d	Cerium-141	β,γ
40.3 h	Lanthanum-140	β,γ	34.3 d	Argon-37	EC
46.8 h	Samarium-153	β,γ	35 d	Niobium-95	β,γ
53.5 h	Cadmium-115	β,γ	39.7 d	Ruthenium-103	β,γ
64.4 h	Yttrium-90	β	43 d	Cadmium-115*m*	β,γ
64.8 h	Gold-198	β,γ	44.3 d	Iron-59	β,γ
65 h	Mercury-197	EC,γ	44.6 d	Hafnium-181	β,γ

Table IV-1. (continued)

Half-Life	Radioisotope	Radiation	Half-Life	Radioisotope	Radiation
45.4 d	Mercury-203	β,γ	371 d	Ruthenium-106	β
50 d	Indium-114*m*	IT,γ	1.3 y	Cadmium-109	EC,γ
50.5 d	Strontium-89	β	2.07 y	Cesium-134	β,γ
57.4 d	Iodine-125	γ	2.5 y	Promethium-147	β,γ
59.1 d	Yttrium-91	β,γ	2.78 y	Antimony-125	β
60.9 d	Antimony-124	β,γ	2.94 y	Iron-55	EC
64 d	Strontium-85	γ	3.57 y	Thallium-204	EC,β
65 d	Zirconium-95	β,γ	5.24 y	Cobalt-60	β,γ
71.3 d	Cobalt-58	EC,β^+,γ	7.5 y	Barium-133	EC,γ
74.2 d	Iridium-192	β	10.27 y	Krypton-85	β,γ
75.8 d	Tungsten-185	EC,β,γ	12.46 y	Hydrogen-3	β
84.2 d	Scandium-46	β,γ	12.7 y	Europium-152	EC,β,γ
89 d	Sulfur-35	β	16 y	Europium-154	β,γ
115.1 d	Tantalum-182	β,γ	28 y	Strontium-90	β
119 d	Tin-113	EC,γ	29.6 y	Cesium-137	β
119.9 d	Selenium-75	EC,γ	125 y	Nickel-63	β
129 d	Thulium-170	β,γ	5.57×10^3 y	Carbon-14	β
165.1 d	Calcium-45	β	2.12×10^5 y	Technetium-99	β
246.4 d	Zinc-65	EC,β^+,γ	3.08×10^5 y	Chlorine-36	β
249 d	Silver-110*m*	IT,β,γ	1.56×10^7 y	Iodine-129	β,γ
285 d	Cerium-144	β,γ			

DESCRIPTION OF AREA

The main shipping area is composed of the following sections: (1) transient incoming and outgoing; (2) barricade and remote handling, including storage; (3) packaging; and (4) inspection. In addition, there are offices and a decontamination section for returned containers. A belt conveyor system and two cranes move packages and large containers within the area. A floor plan is shown in Fig. IV-1.

INVENTORY

Stock solutions of radioisotopes are stored for meeting future requirements only when half-life and needs of consumers merit such storage. Large amounts of extremely long-lived substances or those requiring special handling are either stored elsewhere or further processed.

Figure IV-2 is a view of the packaging area from the transient section, and Fig. IV-3 from the decontamination area. When a processed radioisotope is received, the crane lifts the product sample carrier (or cask) on the conveyor system or through an overhead doorway (shown closed at top left of Fig. IV-2) into the shielded facility. Once behind the barricade, the isotope is removed, and the cask is pulled out again for decontamination. The product bottle is agitated, and a sample is taken for analysis before the product bottle is transferred to the storage area (Fig. IV-4). After analysis, data are keyed to this solution.

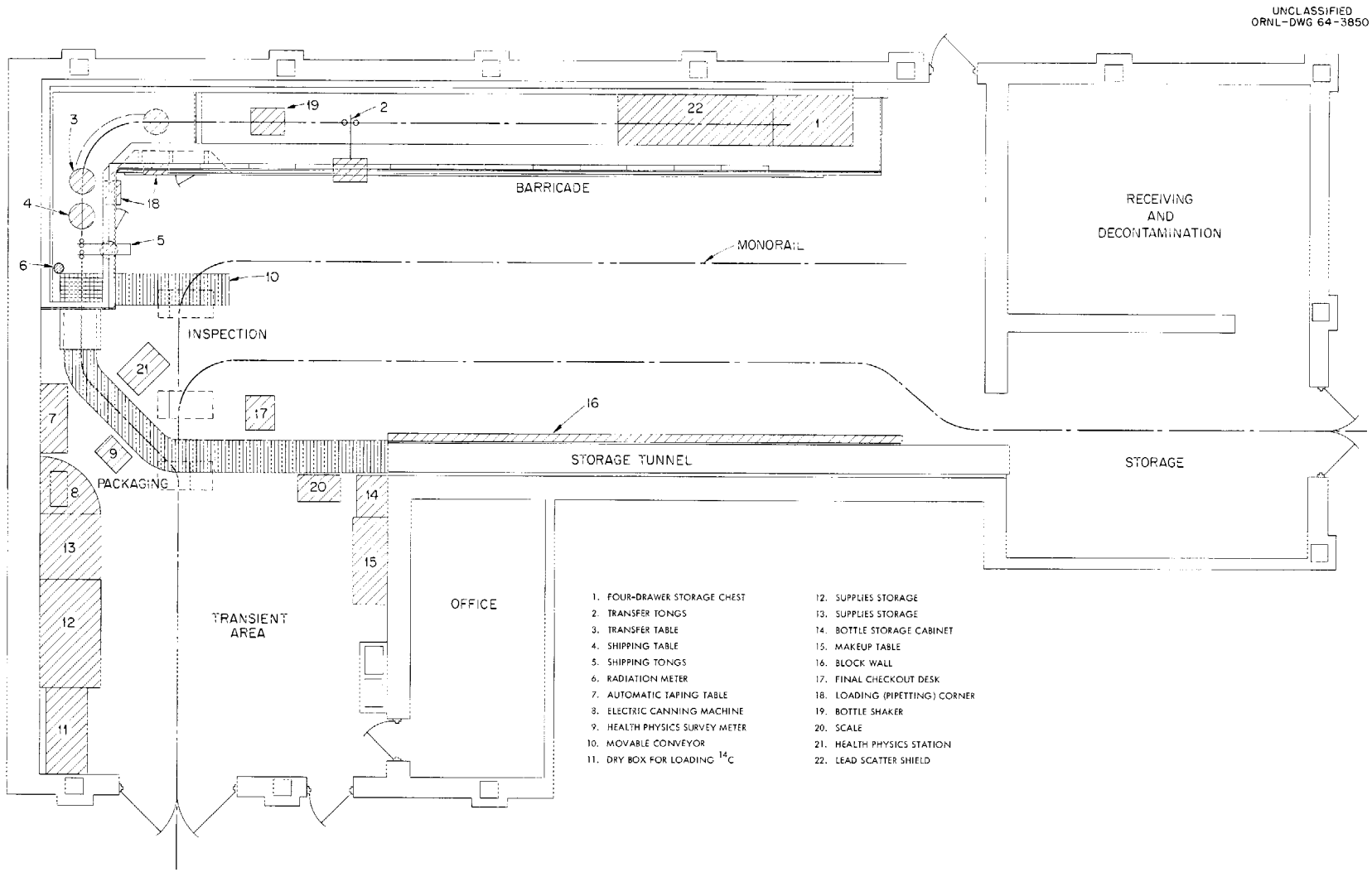

Fig. IV-1. Isotopes Storage and Shipping Area at ORNL (Bldg. 3038).

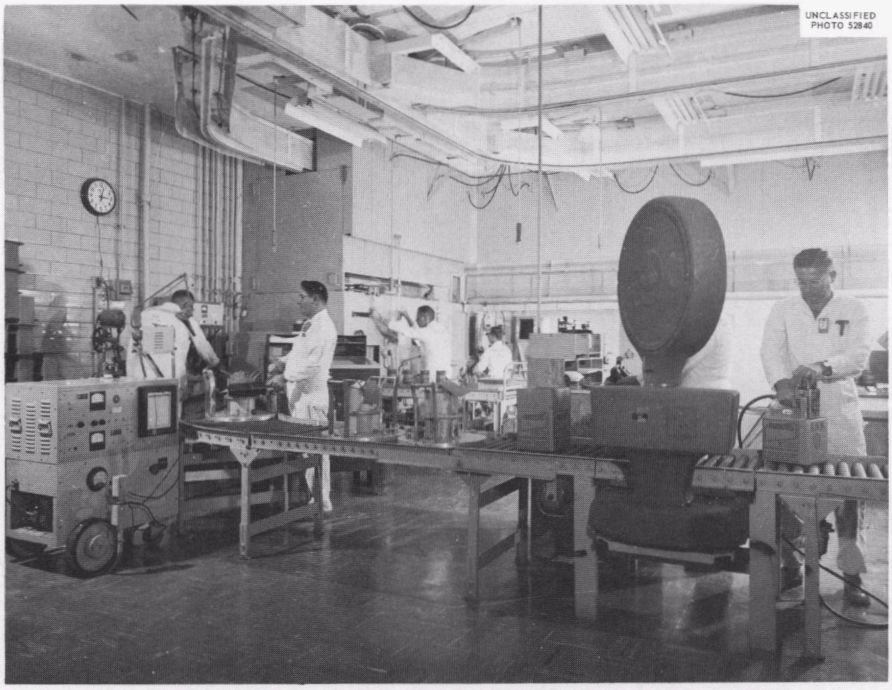

Fig. IV-2. View from Transient Area. Radioisotope packages for shipment are checked (left foreground) for possible contamination and radiation and then are readied for delivery (right). The packaging and shipping operations are performed on an assembly-line basis. The pipetting station is shown at center.

Fig. IV-3. View from Decontamination Area. In foreground, various returnable containers are stored. At right, operator moves storage transfer tongs along barricade to pipetting station (right of center). Movable conveyor, packaging, and final checkout sections are shown in left half of photograph. Storage tunnel wall is shown at extreme left.

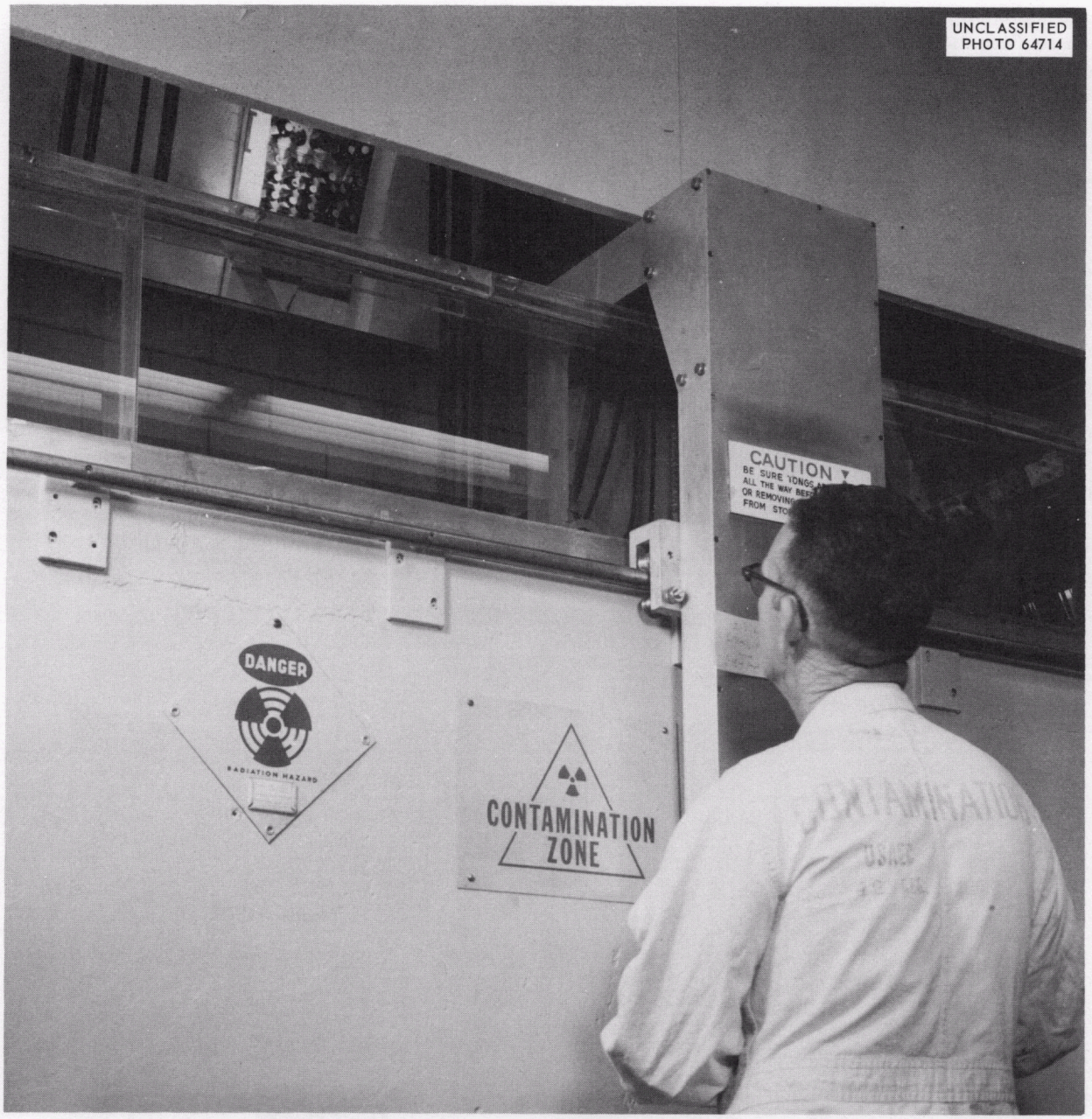

Fig. IV-4. Removing of Product Bottle. Operator remotely handles stock solution bottles in storage chest by viewing them through mirror behind barricade.

Radioisotope product solutions are stored in a four-drawer lead chest. Analyzed samples of stock are retained for varying periods for verification of recorded values. Generally, the most frequently used isotopes are kept in the top drawer, the short-lived ones in the second, and the more penetrating emitters like ^{137}Cs or ^{60}Co in the bottom drawer. Storage bottles may become amber due to the effect of radiation on the glass, and in some cases, such as for α and β radiation, provision must be made to release pressures that might develop owing to radiodecomposition of the solution water. Access is by use of storage tongs equipped with mechanical hands.

A coordinate index system of inventory showing sample, location, and date is used to account for all stored materials. Detailed records also are kept of amounts of solution and calculated decay each time a shipment is made. An aliquot is calculated from the concentration of stock solution to ship a given activity. This amount is both relayed to the shipping operators and entered on an inventory sheet for that isotope. Calculations are facilitated by use of a book containing tables of percentage of decay with time for each isotope kept in storage. Activity (mc/ml) shipped is calculated on the basis of *date of arrival* to requestor by multiplying the activity on date of analysis by the percent activity remaining after Y days of storage plus estimated shipping time. The amount dispersed, type of isotope, and remaining solution and stock is doubly verified at the pipetting station. Carrier recalculations are also noted at time of shipment.

The longer an isotope is kept, the larger the amount of solution needed to ship a given activity, since the activity concentration continually decreases. When activity finally decays to unusable levels for a given isotope, the stock material is discarded.

PREPARING A SHIPMENT

In routinely preparing a shipment from stock, an operator maneuvers the material behind the barricade while viewing the operation through mirrors and high-density windows of zinc bromide solution or special glass.

Shipping bottles (15 to 500 ml) are prepared for use by washing in distilled H_2O, air drying, and labeling.

The storage bottle is moved temporarily to a transfer area (Fig. IV-5) where a pipet is remotely

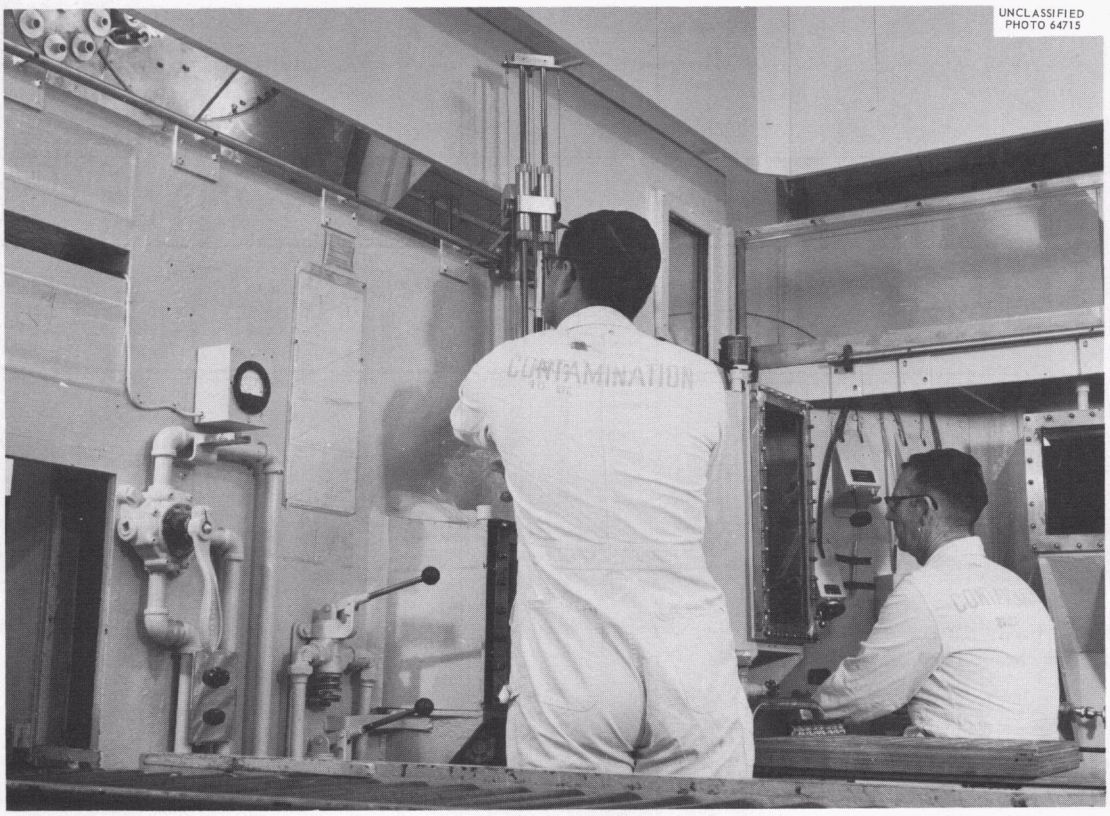

Fig. IV-5. Loading (Pipetting) Station. The operator at right withdraws the correct amount of radioisotope from the storage bottle and transfers it to the shipping bottle. The operator at left then transfers the bottle to a shipping container. Individual pipets are maintained (not shown, but kept below operator at right) for each isotope in stock to prevent introduction of impurities.

operated to withdraw the required amount of isotope and to transfer it to a shipping bottle. Tightly capped, this bottle is then placed in a protective container, and the storage bottle is then returned to storage while the shipment is packaged (Fig. IV-2, left), inspected (Fig. IV-2, right), and shipped. A variety of containers is used for these shipments. The radioactivity of the shipment determines the size of the protective carrier; these range from packages weighing a few pounds to several tons. The package is checked for possible radiation and contamination before being shipped. A close check on transportation schedules is also maintained, especially for short-lived radioisotopes.

METHODS OF SHIPMENT

Generally, radioisotopes having half-lives less than one week are shipped by air; those having half-lives longer than one week are shipped by Railway Express or motor freight. Alternate methods of shipment are used upon request. Postal regulations preclude all but very small amounts of activity being sent by mail. All shipments are made transportation *collect*, f.o.b. point of delivery to a common carrier.

CONTAINERS

Two types of containers are routinely used in making shipments of radioactive materials: 30-day *returnable*, heavy lead-shielded shipping containers, which are sent back to ORNL; and *non-returnable*, light-weight containers, which are used only for one shipment and are not returned.

About 90% of the shipments are made in disposable fiberboard box containers. Many of these shipments are made without the addition of any lead shielding; sometimes, however, lead shields as thick as 1 in. are used. The type actually used is indicated on the packing list which accompanies each shipment. Figure IV-6 shows a typical non-returnable container for liquid shipments, and Fig. IV-7, a returnable container.

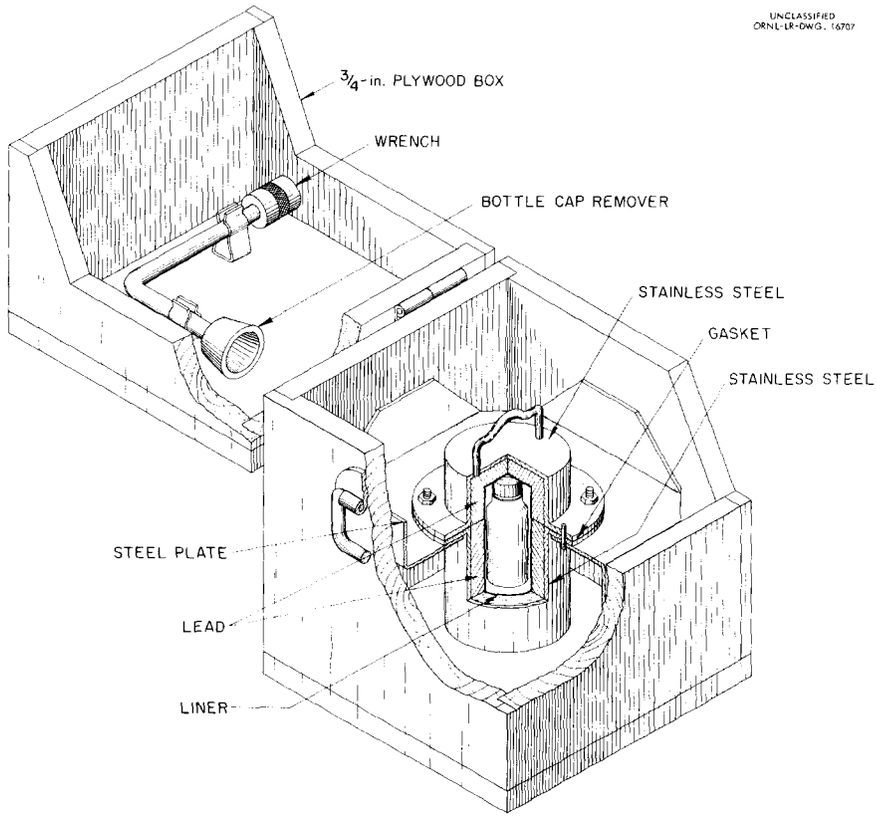

Fig. IV-6. Typical Nonreturnable Container for Liquid Shipments. Lead shielding, 1/8 to 1 in.

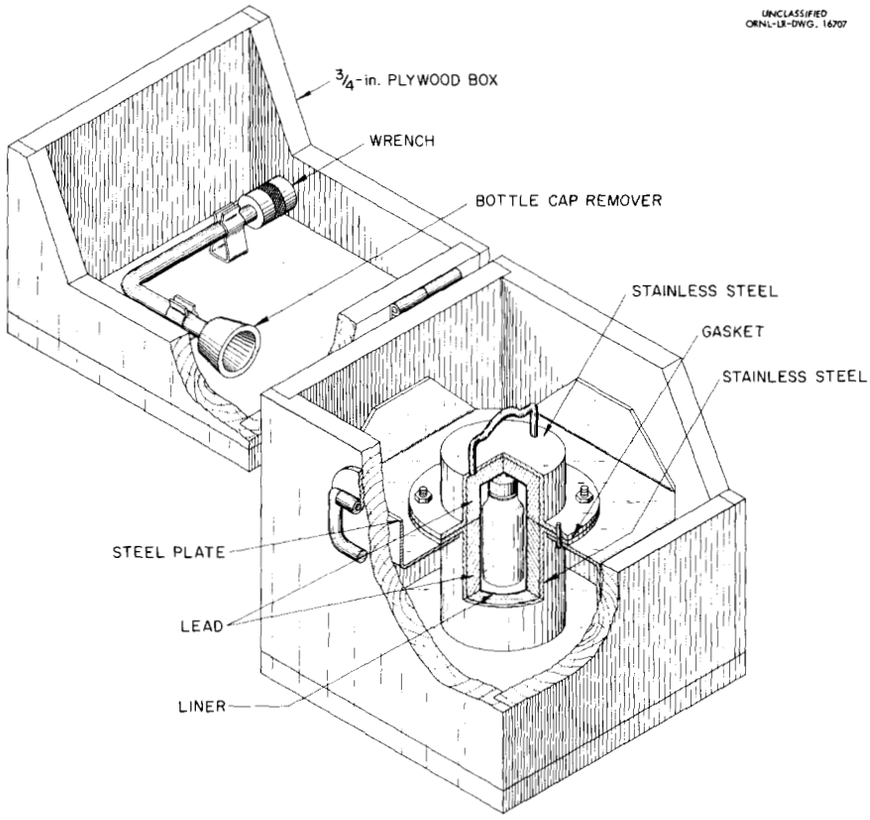

Fig. IV-7. Typical Returnable Container for Liquid Shipments. Lead shielding, 1 to 3 in.

Figure IV-8 is a recent display of these containers. There are several other containers for liquid, solid, and gas shipments, and these are described elsewhere.[1] Table IV-2 gives some of the characteristics of several containers.

Isotopes in gaseous form require special handling and shipping containers. Procedures for these radioisotopes are described in Section III. A returnable gas shipping container is shown in Fig. IV-9.

The responsibility of ORNL for damage to shipments ends when the shipment is delivered to a common carrier, and no claims for damages in transit are considered by the Laboratory.

When the nature of the material being supplied makes it impossible for a standard ORNL container to be used, the customer supplies the container. These must conform to the existing ICC, CAB, or Coast Guard regulations[2] and must be compatible with ORNL equipment.

[1] *Catalog of Radio and Stable Isotopes*, April 1963, available from Isotopes Development Center, ORNL.

[2] All shipments are made in conformance with the following Interstate Commerce Commission, U.S. Coast Guard, and Civil Aeronautics Board regulations:

Handbook of Federal Regulations Applying to Transportation of Radioactive Materials, U.S. Atomic Energy Commission, Washington, D.C., May 1958.

IATA Regulations Relating to the Carriage of Restricted Articles by Air. Ninth Edition, issued by International Air Transport Association, Terminal Centre Building, Montreal 3, Quebec, Canada, 1964.

Tariff No. 15. Interstate Commerce Commission Regulations for Transportation of Explosives and Other Dangerous Articles by Land and Water in Rail Freight Service and by Motor Vehicle Highway and Water Including Specifications for Shipping Containers, Aug. 23, 1963; also see suppls. 1–9 of this document.

Table IV-2. Selected Data on Containers Used in Shipping Radioisotopes

Type of Container	Type of Material Shipped	Maximum Activity		Thickness of Lead Shield (in.)	Outside Dimensions of Box, if Used (in.)	Volume of Bottle, if Used (ml)	Total Weight of Assembled Container (lb)
		Typical Radioisotope	Amount				
Nonreturnable	Liquid, beta emitters and small amounts of gamma emitters	^{32}P	500 mc	None	$4\frac{1}{2} \times 4\frac{1}{2} \times 8$	15, 25, 50, 100, 200, 500	1–2
			>500 mc	None	$8 \times 8 \times 8$		2–3
			>700 mc	None	$12 \times 12 \times 12$		4
		^{131}I	9 mc	None	$8 \times 8 \times 8$		3
			25 mc	None	$12 \times 12 \times 12$		4
	Liquid, gamma emitters	^{131}I	50 mc	$\frac{3}{8}$	$8 \times 8 \times 8$	15, 25	5
			100 mc	$\frac{1}{2}$			6
			145 mc	$\frac{5}{8}$			8
			300 mc	$\frac{3}{4}$			10
			400 mc	$\frac{3}{4}$			10
			650 mc	1			16
			1.5 c	1	$12 \times 12 \times 12$		21
		^{60}Co	10 mc	1	$9\frac{1}{2} \times 9\frac{1}{2} \times 12$	15, 25, 50, 100	20
	Gases	^{37}Ar ^{3}H	Up to 10 c	None	Plywood box ($5 \times 5 \times 16$)	1, 5, 10, 25 (glass ampules)	4–6
	Solids (service irradiations)	^{55}Fe	13 mc	$\frac{1}{4}$	$8 \times 8 \times 8$	Aluminum irradiation can	4
			26 mc	$\frac{1}{2}$			6
		^{59}Fe	5 mc	$\frac{1}{4}$			4
			10 mc	$\frac{1}{2}$			6
Box and tin can disposable; steel cap and key returnable	Toxic liquids	^{89}Sr	1 c	None	$8 \times 8 \times 8$	15, 25, 50, 100, 200	6–10
			2 c				
		^{90}Sr	2.5 c	None	$12 \times 12 \times 12$		7–11

Table IV-2. (continued)

Type of Container	Type of Material Shipped	Maximum Activity		Thickness of Lead Shield (in.)	Outside Dimensions of Box, if Used (in.)	Volume of Bottle, if Used (ml)	Total Weight of Assembled Container (lb)
		Typical Radioisotope	Amount				
Returnable	Liquid, gamma emitters	^{60}Co	30 mc	$1\frac{1}{2}$	$9\frac{1}{2} \times 9\frac{1}{2} \times 12$	15, 25, 50, 100	56–57
			60 mc	2		15, 25, 100, 200	142–222
			500 mc	3		15, 25	231–253
	Gases	^{3}H	>10 c	None	4 diam × 12 long to 4 diam × 33 long	10–1000 (metal cylinders)	6–25
		^{85}Kr, ^{133}Xe	10 mc–90 c				8–86
	Solids	^{60}Co	10–600 mc	$1–3\frac{1}{2}$	Container mounted in Al-covered plywood box		25–275
			1–180 c	$4–7\frac{1}{2}$		Aluminum irradiation can	277–1320
			1000–10,000 c	$8\frac{1}{2}–9\frac{3}{4}$			2620–5600
	Miscellaneous items, such as piston rings			1–2			58–167

Fig. IV-8. Display of Returnable (Right) and Nonreturnable (Left) Types of Containers in Packaging Section.

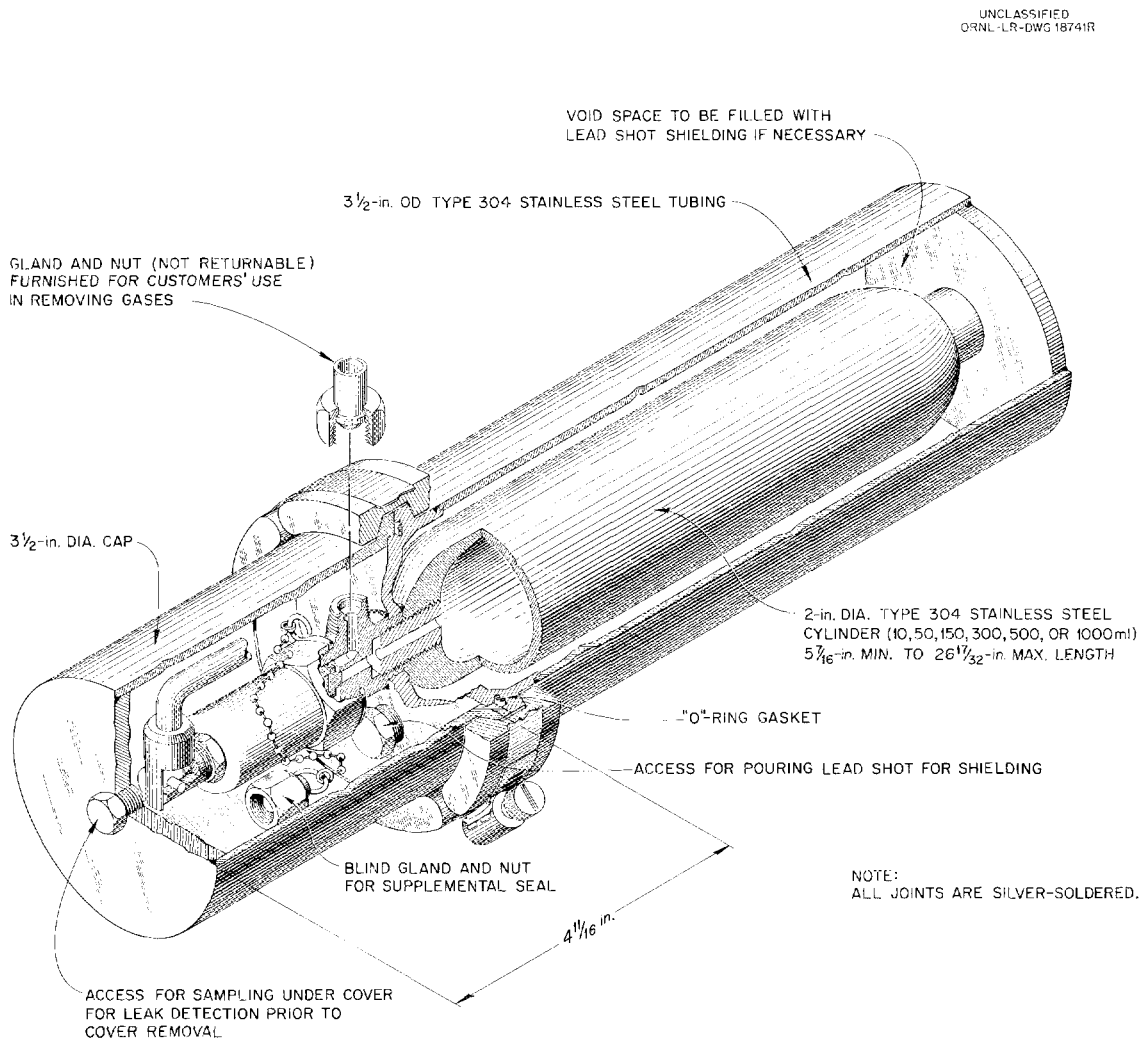

Fig. IV-9. Returnable Gas Shipping Container.

RADIATION FROM PACKAGED RADIOISOTOPES

After radioactive material has been placed in a shipping container, it is checked for outside radiation to ensure that the package meets regulations. These rules specify that there must be no more than 200 mr/hr of radiation at the surface of the container and no more than 10 mr/hr at 1 m from the center of the package. Transferable contamination as determined by wipes or smears, cannot exceed 500 dis/min of beta-gamma per 100 cm^2 and/or 30 dis/min of alpha per 100 cm^2. The radiation on the surface of the package is usually measured with an instrument calibrated to be equivalent to the requirements of Tariff No. 15, Bureau of Explosives Regulations. The alpha smears are measured with a scintillation-type alpha counter and the beta-gamma smears with a thin-window Geiger-Mueller counter. The values determined at the surface and at 1 m from the center of the container are entered under "Health Physics Survey" on the packing sheet (Fig. IV-10) accompanying the shipment. Copies of this form also are used for internal record for the Atomic Energy Commission in shipments of interest to that authority.

UNCLASSIFIED
ORNL-DWG 64-3851

OAK RIDGE NATIONAL LABORATORY
OPERATED FOR U. S. ATOMIC ENERGY COMMISSION BY
UNION CARBIDE NUCLEAR COMPANY
DIVISION OF UNION CARBIDE CORPORATION
OAK RIDGE, TENNESSEE

ISOTOPE SHIPPING MEMO
OAK RIDGE NATIONAL LABORATORY
OPERATED FOR U. S. ATOMIC ENERGY COMMISSION BY
UNION CARBIDE NUCLEAR COMPANY
DIVISION OF UNION CARBIDE CORPORATION
OAK RIDGE, TENNESSEE

PACKING LIST

ISOTOPE ORDER NO.

CUSTOMER'S ORDER NO.	ISOTOPE ORDER NO.	LICENSE NO.	SCHEDULED DATE

SHIP TO

BILL TO (IF DIFFERENT FROM SHIP TO)

NOTE: THIS IS NOT AN INVOICE. UPON RECEIPT OF INVOICE, PLEASE MAKE CHECKS PAYABLE TO UNION CARBIDE NUCLEAR COMPANY CONTRACT ACCOUNT.

ROUTE AND SHIPPING INSTRUCTIONS

CONTAINER NO.

BILLING INSTRUCTIONS	DISCOUNT CERT. NO.	CUSTOMER CODE	SALE CODE	NO. SHIPMENTS
		CUSTOMER TYPE	MATERIAL TYPE	

DESCRIPTION OF MATERIAL ORDERED

SPECIFIC ACTIVITY REQUESTED

DATE SHIPPED

CONTAINER WEIGHT

ORDERED	SHIPPED	DESCRIPTION	UNIT PRICE	EXTENSIONS	HANDLING CHARGE	CONTAINER DEPOSIT	TOTAL VALUATION

CHEMICAL FORM	BATCH NO.	CONCENTRATION	VOLUME OR PRODUCT WEIGHT	SPECIFIC ACTIVITY
		mc/ml	ml	mc/g

Assayed at 8.00 A. M. _____

PPT at pH 7 _____

I 133 _____ %

Heavy Metals _____ p.p.m.

Total Solids _____ mg./ml

Non Volatile Materials _____ mg./ml

Normality _____

Radiochemical Purity _____ %

Mass Analysis _____

Chemical Analysis _____

LOAN PERIOD EXPIRES

DESCRIPTION AND COST OF TECHNICAL SERVICES

INTENSITY OF RADIATION UNSHIELDED

ON _____ AT _____ THIS MATERIAL MEASURED _____ MR/HR AT _____ INCHES

THIS INFORMATION IS INCLUDED IN ORDER THAT YOU MAY KNOW THE INTENSITY OF THE RADIATION WITH WHICH YOU WILL BE WORKING.

SIGNED _____

HEALTH PHYSICS SURVEY

NOTE: THIS SURVEY IS THE RESULT OF READINGS TAKEN AFTER MATERIAL IS COMPLETELY PACKAGED. A LAURITSEN ELECTROSCOPE WAS USED IN MAKING THE SURVEY.

READING: MAXIMUM SURFACE RADIATION _____ MR/HR

AND _____ MR/HR @ 1 METER FROM CENTER OF CONTAINER.

APPROVED FOR SHIPMENT _____
H. P. SECTION

CAUTION: NEW DRUG LIMITED BY FEDERAL LAW TO INVESTIGATIONAL USES
THIS MATERIAL HAS NOT BEEN STERILIZED OR TESTED FOR PYROGENIC MATERIAL

1

UCN-2775
(3 3-61)

Fig. IV-10. Isotope Shipping Memorandum.

ACKNOWLEDGMENT

For their contributions to this volume, the authors wish to thank:

ORNL Analytical Chemistry Division
P. S. Baker
E. E. Beauchamp
T. A. Butler
W. C. Davis
C. W. Friend
J. H. Gillette
Karyl Hall
Susan C. Keith
E. Lamb
R. E. McHenry
J. J. Pinajian
A. F. Rupp
F. V. Williams

Appendix A. Facilities for Production and Processing of Radioisotopes

Two reactors are used for irradiation of targets at ORNL, the Low Intensity Test Reactor (LITR) and the Oak Ridge Research Reactor (ORR). Preparation of targets prior to irradiation and processing them afterward to obtain radioproducts of a specified purity are done in a group of separate, essentially identical buildings that are equipped with shielded cells, remote handling equipment, glove boxes, and hoods. In-process or product radioisotopes are analyzed, stored, and prepared for shipment in a single building. Contaminated wastes are discharged into a large central disposal system.

DESCRIPTION OF ORR

The ORR[1] is the primary facility for production of radioisotopes at ORNL. It is generally more suitable than the LITR since its higher flux permits higher specific activities, smaller amounts of targets, or both. The reactor is a source of both thermal and high-energy neutrons and is a water-cooled and -moderated research reactor of the Materials Testing Reactor (MTR) type.

The reactor characteristics of interest to the radioisotope program are:

Operating power (Mw)	30
Thermal-neutron flux (neutrons cm^{-2} sec^{-1})	1.6×10^{14} (av) 5×10^{14} (max)
Fast-neutron flux (neutrons cm^{-2} sec^{-1})	Varies according to position in lattice; ranges from 10 to 50% of thermal flux
Operating cycle (weeks)	~8
Refueling cycle (days)	~12
Operating time (%)	~80
Unscheduled shutdown frequency	~4 per month (av)
Gamma heating (w/g)	3–10 (depending on material and lattice position)

ORR Irradiation Facilities. – Figure A-1 shows the reactor core tank, the poolside irradiation facilities, and the engineering test facilities.

The irradiation facilities available for use by the Isotopes Development Center are shown in a typical lattice pattern in Fig. A-2. Access is through tubes (V-1, V-2, etc.) in flanges in the reactor tank. Seven core lattice positions with a flux of $\lesssim 5 \times 10^{14}$ neutrons cm^{-2} sec^{-1} are used. Loading is ordinarily done by the use of "rabbits." Foil or wire activation is used to measure neutron flux in the ORR because of limited space in the irradiation can.

PROCESSING FACILITIES

Most processing involves curies of activity; therefore most operations are performed remotely inside shielded cells.[2] Glove boxes generally supply adequate protection from the radiation emitted by alpha rays, and hoods are used for processing small amounts of beta-gamma emitting isotopes.

[1] *Isotopes and Radiation Technol.* 1(2): 130–136, (Winter, 1963–1964); T. E. Cole and J. P. Gill, *The Oak Ridge National Laboratory Research Reactor (ORR), A general description,* ORNL-2240 (Jan. 21, 1957); J. A. Cox and T. E. Cole, *Proc. Intern. Conf. Peaceful Uses At. Energy, 2nd Geneva* 10, 86 (1958).

[2] Hot-cell construction is described in the *Conference on Hot Laboratories and Equipment* (proceedings of 1957, 1958, 1960, 1963), American Nuclear Society, New York, and in "Structural Aspects of Laboratory Planning," pp. 171–216 in *Laboratory Planning,* ed. by N. F. Lewis, Reinhold, New York, 1962; E. Lamb, "Special Features of New Radioisotope Processing Cells," p. 311 in *Fourth Annual Symposium on Hot Laboratory Equipment,* TID-5280 (1955).

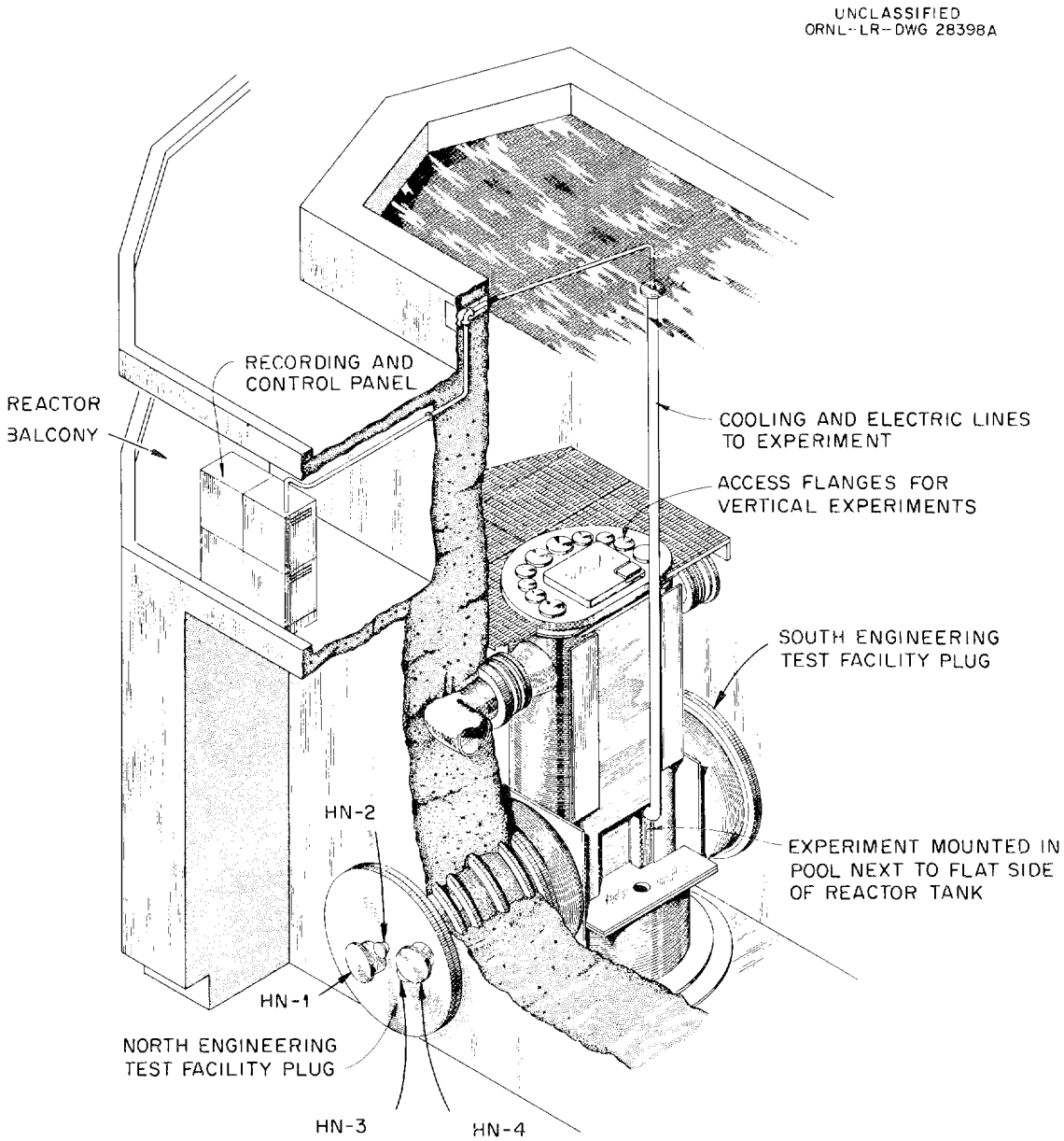

Fig. A-1. Oak Ridge Research Reactor Engineering Test and Poolside Irradiation Facilities.

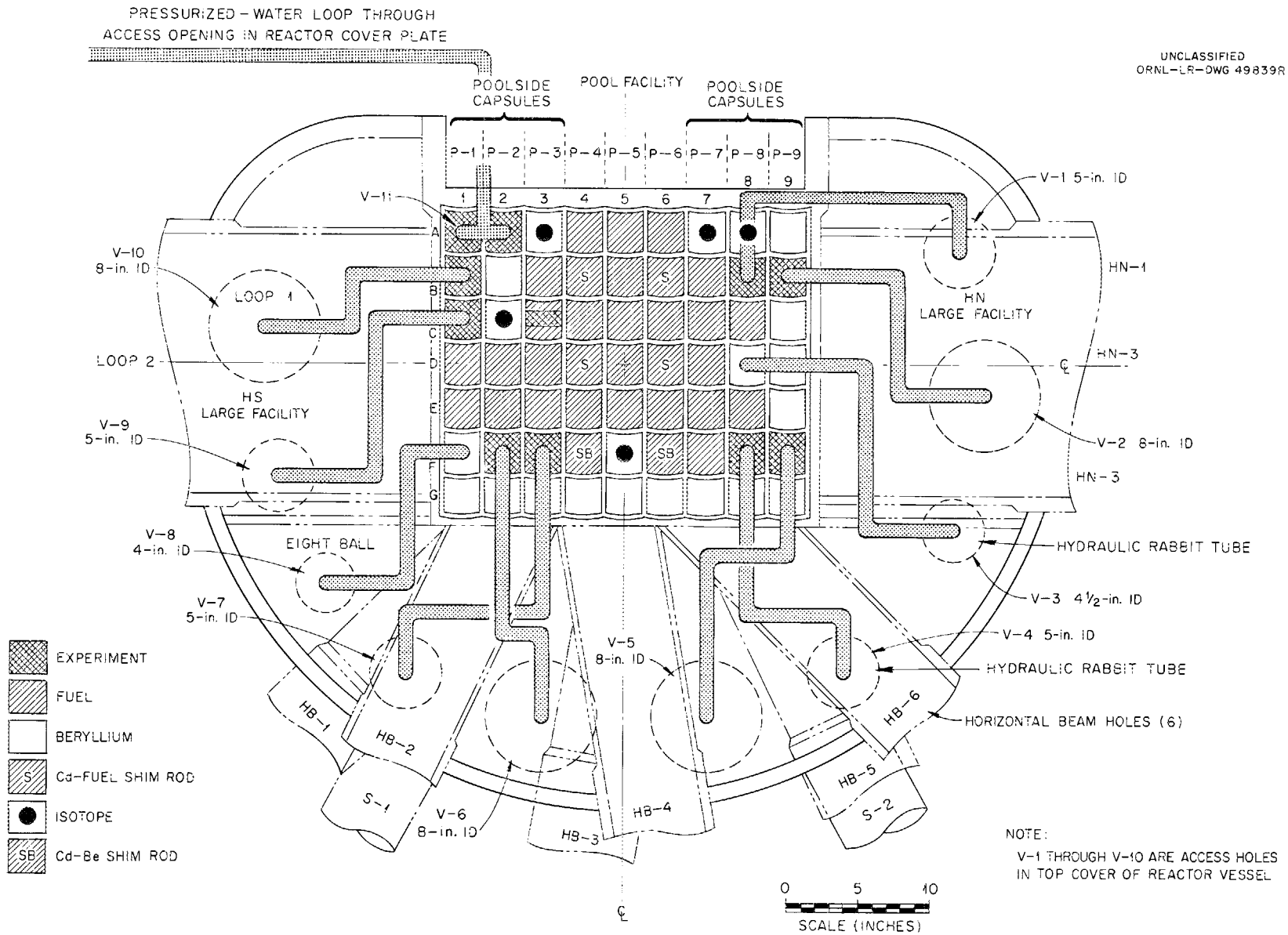

Fig. A-2. Oak Ridge Research Reactor Lattice Pattern and Experimental Locations.

Hot Cells. – Routine processing is done in five shielded cells. Two of these are low-level cells in which curie amounts of activity can be handled safely; one is an intermediate-level cell in which the equivalent of 1000 curies of ^{60}Co can be handled safely; and two are heavy-duty cells, shielded with 3 ft of high-density concrete, suitable for ~10,000 curies of ^{60}Co or its equivalent (for ~1 mr at the outside of the cell). Development work on new processes and on new radioisotopes is accomplished in four additional heavy-duty cells (Fig. A-3). All cells are equipped with doors which permit entry with shielded transfer casks. A loaded cask is placed inside a cell, the cell is closed, the cask is opened, and the radioactive material is removed from the cask for processing.

The cells are all quite similar (Figs. A-4 and A-5 show front and back views), except for inside dimensions and wall thicknesses. All are equipped with commercial manipulators which penetrate the cell through the face or at the top. High-density glass windows permit observation of the interior of the cells. Plastic "boots," which cover the remote or slave end of the manipulators, serve two purposes: to prevent contamination and to seal the opening where the manipulator enters the cells.

Electric, water, and air services are provided for the various operations in cells. Air-operated hoists are used to lift heavy objects. Stainless steel liners permit easier decontamination. Since the cells are multipurpose, the chemical equipment

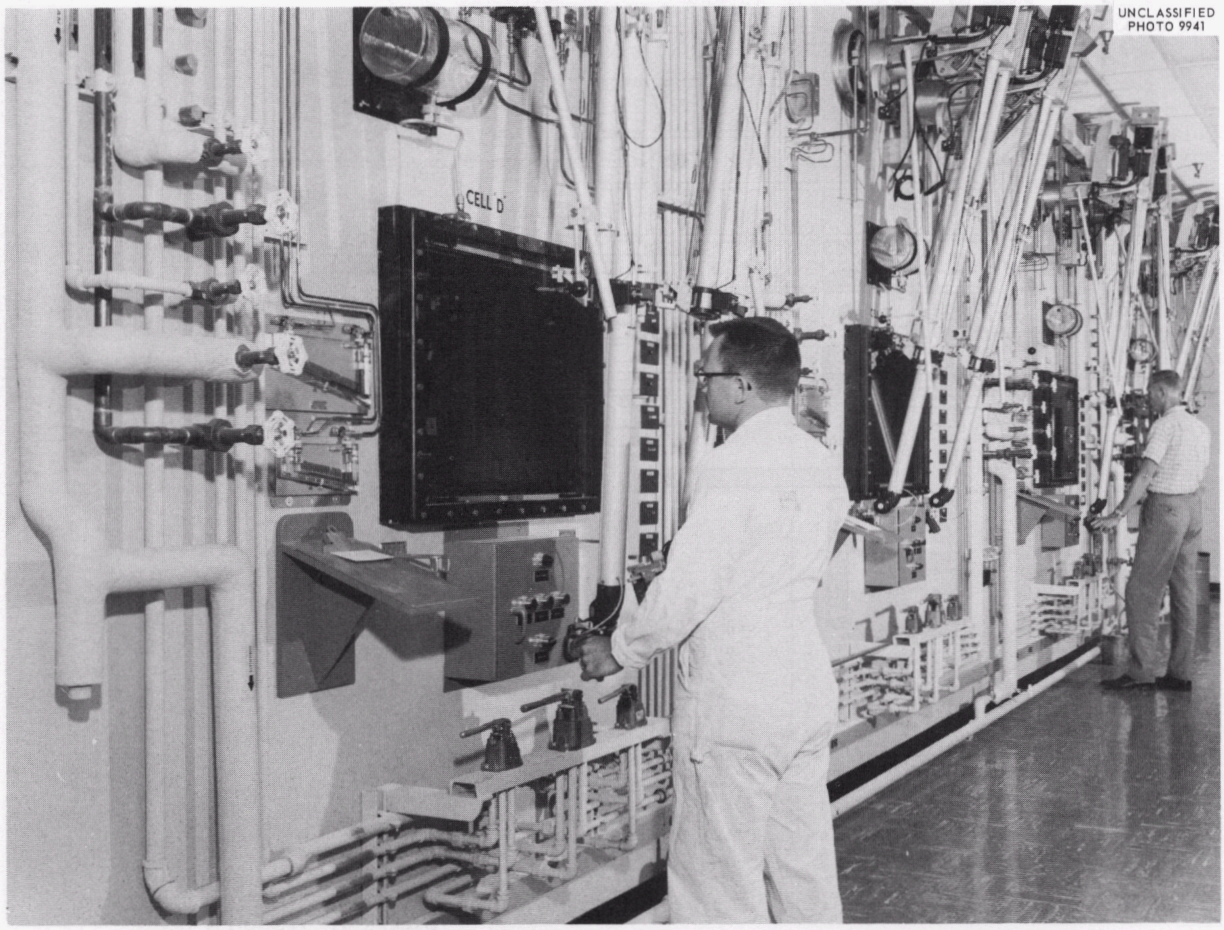

Fig. A-3. Heavy-Duty Cells for Development.

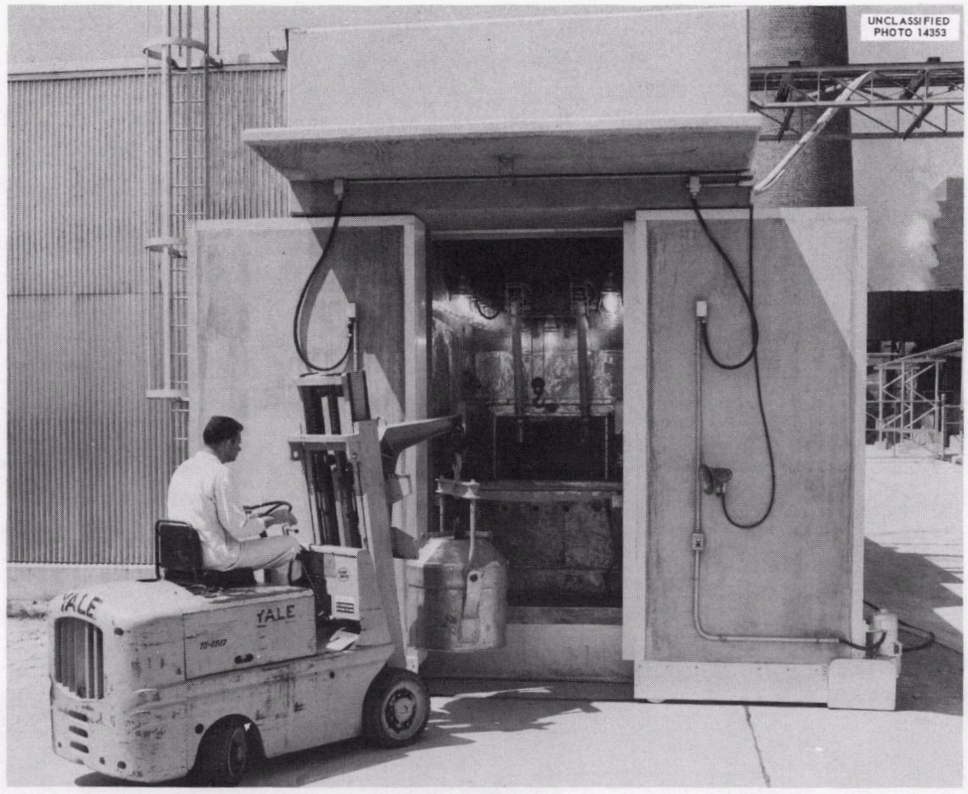

Fig. A-4. Loading Cask in Rear of Shielded Cell.

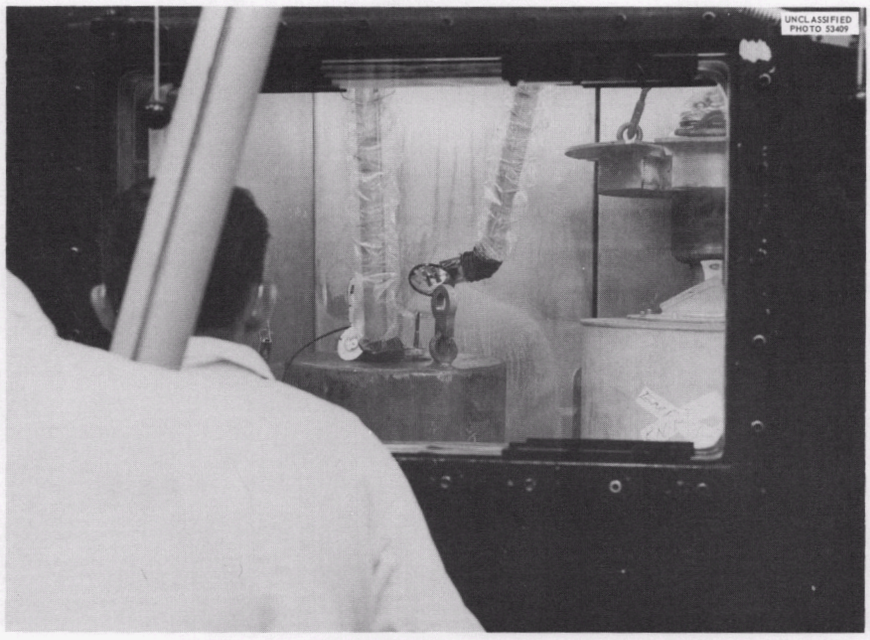

Fig. A-5. Opening Shielded Cask Inside Cell.

in the cell varies with the operation to be performed. Glassware is used in many of the operations. Equipment and casks are admitted to the cells through either sliding or hinged doors. Cells are decontaminated by use of the manipulators to brush cleaning solution on walls and trays before cell doors are opened for equipment changes. Small items, such as tools,[3] can be placed in cells containing radioactive material by means of shielded ports in the cell wall. The inside cell dimensions vary from 4 × 4 × 6 ft high to 6 × 6 × 10 ft high. The shielding thickness varies from 2 ft of normal concrete to 3 ft of high-density concrete.

[3]B. F. Early, "Specialized Devices for Manipulator Cell Operation," in *Conference on Hot Laboratory and Equipment*, 1957, American Nuclear Society, New York.

Manipulator operations are performed on a stainless steel work table located next to the viewing window (Fig. A-6). The cell floor behind the work table serves as an area to place casks for insertion and removal of radioactive materials. These casks remain in the cell during the operations.

The cells have two ventilation systems: general cell ventilation and vessel ventilation. The vessel ventilation, which provides off-gas during operations that can discharge activity from the vessel, passes through a scrubbing column and then through an absolute filter. The cell ventilation is passed directly through absolute filters. A slight negative pressure is maintained between the inside of the cell and the outside of the cell. Operations involving more than 1000 curies of

Fig. A-6. Manipulating Radioisotopes Inside a Cell.

beta-gamma activity are performed in cells located in contained areas.[4]

Glove Boxes and Hot Hoods. – Low-level materials generally are processed in glove boxes when complete containment of activity is necessary. Lead bricks or similar materials are used for shielding around specific vessels containing activity. The boxes are ventilated, and gases are filtered as they leave the enclosures. A slight pressure differential is maintained between the inside and outside of the glove box, and in some instances absolute filters are used for the inlet air. Figure A-7 shows glove boxes used for processing materials.

Standard chemical hoods, adequate for small amounts of activity, are equipped with drains for disposal of radioactive waste solutions. Hood exhaust is filtered; the amount of linear air flow is such that at least 150 fpm flows through the face of the hood. This flow is maintained by the opening and closing of a damper that controls flow proportional to the opening and closing of the hood window. Sliding doors are provided with glove ports in some of the hoods to give better containment.

[4] A. F. Rupp, "Methods of Handling Multikilocurie Quantities of Radioactive Materials," *Proc. Intern. Peaceful Uses At. Energy*, 1st Geneva, 1955 14, 128 (1956).

REMOVAL OF RADIOACTIVE WASTE

Radioactive solutions are removed from cells by means of hot drains which are connected to a large central disposal system for ORNL wastes, and gas waste streams are further treated before final elimination to an exhaust stack. Figure A-8 shows the disposal system for liquid and gaseous wastes.

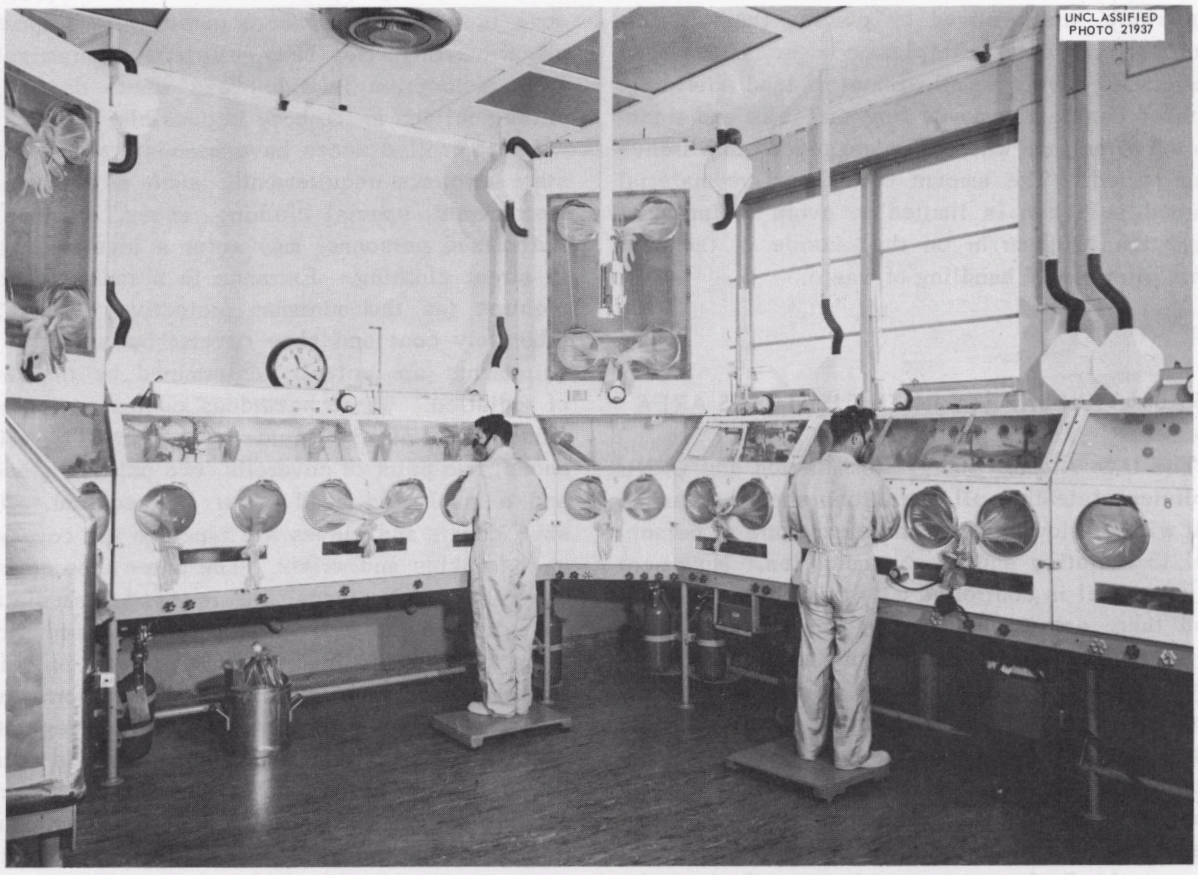

Fig. A-7. Glove Boxes for Processing Low-Level Materials.

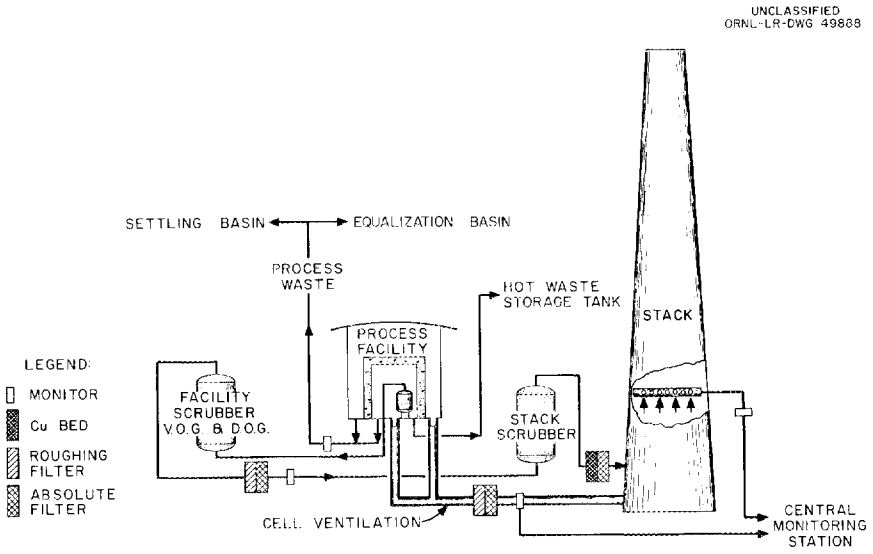

Fig. A-8. Treatment of Waste Streams.

Solid wastes, such as paper, small tools, and glassware, are removed by placing them in galvanized cans lined with plastic bags. These cans sometimes have a small amount of lead shielding. Loaded cans are removed from the cells and transported to an area where they are placed in a trench and buried. The amount of radioactive material placed in a can is limited to avoid radiation of more than 200 mr/hr on the outside of the can. This allows safe handling of waste.

RADIATION SAFETY IN THE ISOTOPES AREA

The U.S. Atomic Energy Commission and ORNL policies state that all operations shall be carried out with the lowest reasonable exposure of personnel to radiation and to contamination. Movement of personnel is controlled with this policy in mind, and there are three kinds of zones established: regulated, radiation, and contamination. A regulated zone is an area where operations are restricted to control radioactive contamination. This zone may contain radiation and/or contamination zones ranging from a small spot to a large area. A radiation zone is an area where control measures involve external radiation exposure to personnel. Such a zone may be posted where the dose rate is above 3 mrems/hr and the accumulated daily dose may be 20 mrems. A contamination zone is established where personnel, equipment, or surroundings may be significantly contaminated with radioactive nuclides and where deposition of the nuclides in the body is possible.

All controlled zones have boundary signs which state entrance requirements, such as monitoring instruments, special clothing, shoes, and masks. Authorized personnel may enter a regulated zone in street clothing. Entrance to a radiation zone requires (as the minimum protective clothing) a laboratory coat and shoe covers; but specific requirements are actually determined by the level of radiation. Where hazardous contamination may exist (such as the inside of hot cells), yellow shoes, two pairs of coveralls, two pairs of gloves, and a mask and head cover are required. The shoe covers and gloves are taped to the coveralls at the ankles and wrists. The outer shoe covers, coveralls, and gloves are removed immediately on exit from the cell. There are also occasions when plastic air-lined suits are worn in cells. Contamination-zone clothing may be worn in a regulated zone, but no person may enter a regulated zone from a contamination zone until it is established that he carries no contamination. When a person is to enter a radiation zone or a contamination zone, he wears a film badge, a dosimeter, and a pocket meter. Other portable meters are used when necessary.

Detection of Radiation. – There are a number of instruments used in the IDC for the detection of radiation. Some of these instruments are listed in Table A-1.

Containment. – Some of the structures that house the hot cells are containment buildings; that is, the outside walls are sealed and the entrances are gasketed to minimize leakage. When a building is "put in containment," pressure within the building is dropped to 0.5 in. w.g. below atmospheric. (Air is supplied to the building through barometric dampers or automatic closures

Table A-1. Instruments for Detection Used at IDC

Name	Particle	Type
Alpha Survey Meter	Alpha	Scintillation counter
Gas Flow Alpha Counter	Alpha	Gas flow counter
Geiger-Mueller Survey Meter, Thyac	Beta-Gamma	Geiger-Mueller counter
"Cutie Pie"	Beta-Gamma	Air-ionization chamber
"Juno"	Beta-Gamma	Air-ionization chamber
Electroscope	Beta-Gamma	Fiber
Thermal Neutron Survey Meter	Neutron	BF_3 proportional counter
"Rudolph" (Fast Neutron Dosimeter)	Neutron	Proportional counter
Alpha Air Sampler	Alpha	Scintillation counter
Alpha Scintillation "Poppy"	Alpha	Scintillation counter
Continuous Air Monitor	Beta-Gamma	Fixed filter
Monitron	Beta-Gamma	Air-ionization chamber
Hand and Foot Monitor	Beta-Gamma	Geiger-Mueller counter

Table A-2. Recommended Permissible Dose[a] to Body Organs of Occupational Workers Exposed to Ionizing Radiation

Organ	Recommended Maximum Weekly Dose (rems)	Maximum Permissible Dose (rems)		
		Quarterly (13 weeks)	Annual	Age proration total
Total body, head and trunk, eye lens, gonads, blood-forming organs	0.1	3	12	5(N – 18)
Skin of whole body, thyroid	0.6	10	30	30(N – 18)
Hands, forearms, feet, ankles	1.5	25	75	75(N – 18)
Bone		$30/4n$[b]	$30/n$	$30/n$(N – 18)
Other body organs		5	15	15(N – 18)

[a]Values given are in addition to doses from medical and from background exposures.

[b]This n is referred to as the "relative damage factor." It is 1 for radium isotopes and for gamma radiation; otherwise it is set equal to 5 for all radionuclides in bone.

to prevent too high a vacuum.) During containment, the pressure in the cells is maintained at ~1.0 in. w.g. below building pressure. Exhaust from the building is by way of the cell ventilation system through absolute filters to a stack. Constant air monitors automatically effect containment when sufficient radiation is detected.

Exposure Limits. – The laboratory endeavors to keep exposure to its employees well below the maximum permissible dose as recommended by the Federal Research Council and the National Committee on Radiation Protection.[5]

The external radiation dose to an individual cannot exceed the recommended permissible doses shown in Table A-2.

[5] *Safe Handling of Radioisotopes*, Safety Series No. 1, International Atomic Energy Agency, Kaerntnering, Vienna, Austria, 1958; *Radiological Handbook*, Revised Edition, U.S. Department of Health, Education, and Welfare, Washington, D.C., "Safe Handling of Radioisotopes," *Handbook No. 42*, National Bureau of Standards, U.S. Department of Commerce, Washington, D.C.

Appendix B. Assay Methods Used in the ORNL Radioisotopes Program

Radioisotope product solutions are analyzed to ensure conformance to ORNL specifications.[1] Analytical data include concentration of the major activity, acidity or basicity, and radiochemical purity, and may include chemical purity, specific activity, total solids, pH, nonvolatile matter, and chemical composition. Specific analytical procedures for each radioisotope produced can be found in the *ORNL Master Analytical Manual*, TID-7015. The processing procedure for each radioisotope given in Section III is referenced to the appropriate analytical procedure(s) in TID-7015.

Two samples of each product are sent from the Shipping Department (see Section IV) to the adjoining shielded analytical facility[2] where necessary dilutions are made (Fig. B-1). The diluted samples are then removed from the cell for the above-mentioned analytical determinations.

To determine the disintegration rate of each radioisotope, the instruments employed routinely (which include ionization chambers, well-type scintillation counters, GM counters, proportional counters, liquid scintillation counters,[3] and scintillation spectrometers) must be calibrated by taking readings on a standard provided by the U.S. National Bureau of Standards or a sample of material which has been standardized by an "absolute" technique such as 4π coincidence counting,[4] x-ray spectrometry, or counting using an end-window Geiger-Mueller or proportional counter.

The sample to be standardized is prepared according to the particular type of radiation emitted. When beta activity is to be determined, the sample is dried on a suitable film, mounted, and inserted into a counter. Samples for gamma and x-ray spectrometry are dried on 1-in. watch glasses; measurements of total gamma activity are made on liquid samples.

Beta-gamma emitting nuclides are usually standardized by 4π coincidence counting with an instrument in which the beta detector is a 4π counter and the gamma detector is an NaI(Tl) scintillation spectrometer equipped with a differential and integral analyzer circuit. The 4π counter (containing the active samples deposited on a thin conducting film) is placed next to the scintillation detector. The pulse height selector of the scintillation spectrometer is set so as to accept pulses from only a particular gamma ray. Usually the photoelectron peak resulting from the most energetic gamma ray present is used. The assembly includes amplifiers, a delay circuit to match delays within the system, the discriminator for the gamma counter, and beta, gamma, and coincidence scalers.

Beta emitters (little or no gamma) are measured by 4π counting, or "absolute beta counting" with end-window proportional counters. Emitters of low-energy beta radiation are efficiently measured with a liquid scintillation counter by incorporating the active sample in a solution containing a scintillator compound. A vial containing the mixture is placed between two multiplier photo-tubes which detect the scintillations produced by beta radiation.

X rays, emitted by electron capturers of nuclides which decay essentially by conversion-electron emission, are measured with an x-ray proportional counter spectrometer filled with argon or krypton. This instrument is calibrated with samples whose disintegration rates can be determined by other

[1] *Catalog of Radio and Stable Isotopes*, Isotopes Development Center, Oak Ridge National Laboratory (April 1963).

[2] J. E. Morton *et al.*, "Shielded Facility for Use in the Analysis of Radioisotopes," pp. 161–67 in *Conference on Hot Laboratory Equipment, November 1963*, American Nuclear Society, New York.

[3] C. G. Bell and F. N. Hayes (eds.), *Liquid Scintillation Counting*, Pergamon, New York, 1958.

[4] R. Gunnink, L. J. Colby, Jr., and J. W. Cobble, "Absolute Beta Standardization Using 4 Pi Beta-Gamma Coincidence Techniques," *Anal. Chem.* 31, 796 (1959).

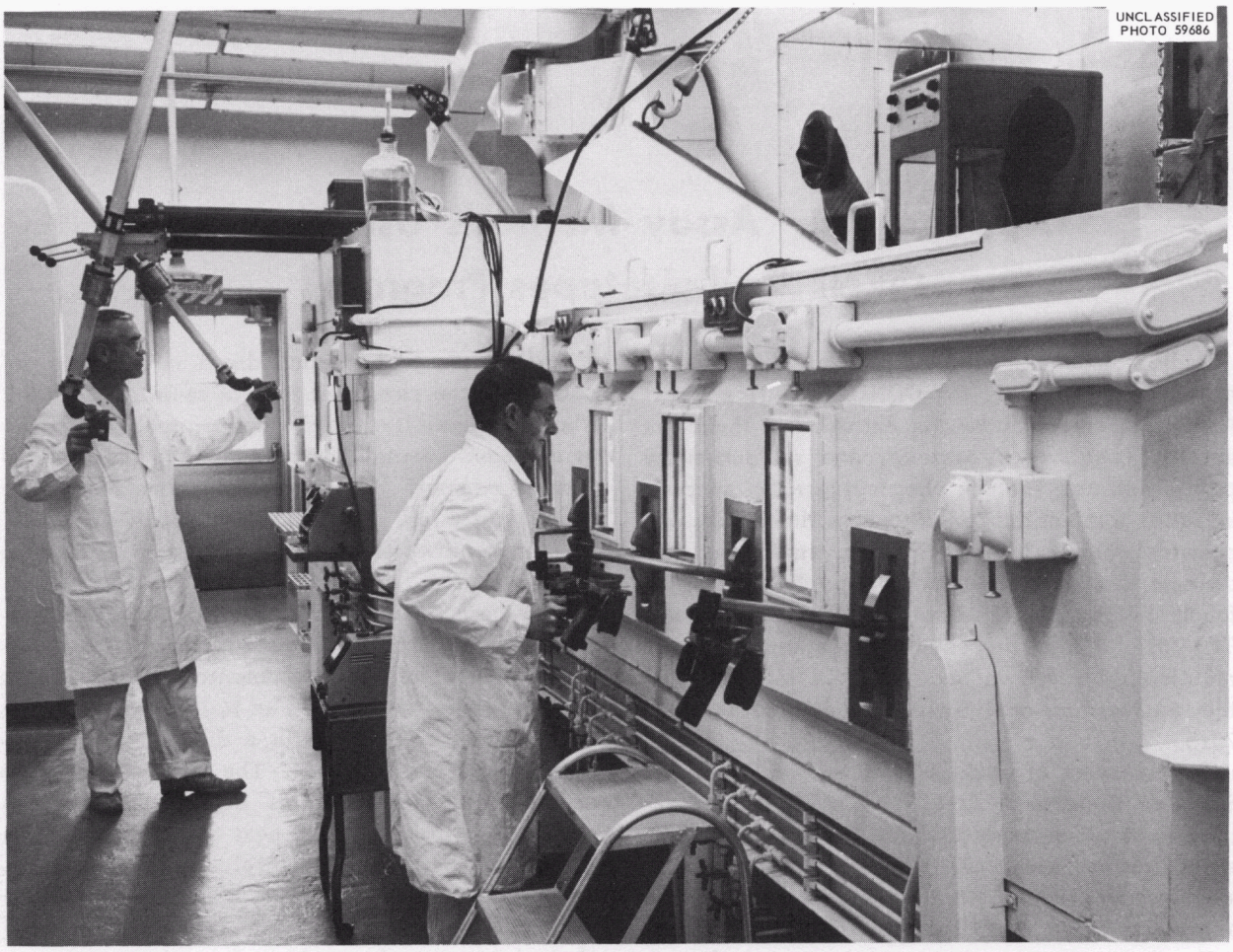

Fig. B-1. Shielded Facility for Analysis of Radioisotopes.

methods (e.g., coincidence counting, or measurement with a calibrated gamma ionization chamber).

CALIBRATION AND ROUTINE MEASUREMENT

The methods used at ORNL for the calibration and routine measurement of radioisotopes are shown in Table B-1. Estimates of both the *accuracy* of disintegration rate determinations and *precision* of routine measurements are furnished. The latter value indicates the reproducibility to be expected among several shipments of a given material. Accuracy does not refer to the primary calibration itself (i.e., by coincidence or 4π counting), but to the routine measurement of millicuries per milliliter in shipments. The modes of decay and half-lives are included in the table. A radioactive daughter is listed with the parent (e.g., ^{113}Sn-In) if its half-life is short compared to that of the parent; otherwise it is listed under "Remarks."

The gaseous radioisotopes produced – ^{85}Kr, ^{3}H, and ^{37}Ar – are also analyzed before shipment. A mass spectrometric analysis is performed on ^{85}Kr and ^{3}H which are also continually monitored during processing. Argon-37 is counted with an NaI(Tl) gamma-ray spectrometer. Carbon-14 is assayed by mass spectrometric analysis and scintillation counting.

Table B-1. Radioisotope Assay Method

Element-Isotope	Half-Life	Decay	Assay Instrument[a]		Limit of Error[b] (%)	Precision[c] (%)	Remarks
			Calibration	Routine			
Antimony-122	2.75 d	β,γ(EC)	γS	IC,SC	10	2	β disintegration rate reported
Antimony-124	60.9 d	β,γ	4πC	IC,SC			
Antimony-125	2.78 y	β,γ	4πC	IC,SC	10	2	Te^{125m} daughter
Arsenic-76	26.8 h	β,γ	4π	IC,SC	10	2	
Arsenic-77	38.7 h	$\beta(\gamma)$	4π	PC	10	5	
Barium-131	12 d	EC, γ	γS	γS	10	5	58% decay through 0.49-Mev γ assumed Cs^{131} daughter
Barium-133	7.5 y	EC, γ	IC	γS	10	2	
Barium-140	12.8 d	β,γ	4πC	PC	10	5	La^{140} daughter
Bismuth-210	5.00 d	β	PC	PC	10	5	AβC. Po^{210} daughter
Bromine-82	35.55 h	β,γ	4πC	IC,SC	5	2	
Cadmium-109	1.3 y	EC,γ	γS	γS	20	5	
Cadmium-115*m*	43 d	β,γ	4π	GM,PC	10	3	
Cadmium-Indium-115	53.5 h; 4.5 h	β,γ;IT(β)	γS	PC	20	5	In^{115m} γ measured
Calcium-45	165.1 d	β	4π	LS,PC	5	3	NBS Std. used
Calcium-47	4.53 d	β,γ	4πC	γS	10	2	Sc^{47} daughter
Carbon-14	5.57×10^3 y	β	LS	LS	10	5	
Cerium-141	32.5 d	β,γ	4πC	γS	10	5	
Cerium-Praseodymium-144	285 d; 17.5 m	β,γ	PC	PC	5	4	Pr^{144} daughter counted (AβC)
Cesium-134	2.07 y	β,γ	4πC	IC,SC	5	2	
Cesium-Barium-137	~30 y; 2.6 m	β,IT	IC	IC,SC	5	2	Ba^{137m} daughter measured. IC efficiency calculated
Chlorine-36	3.08×10^5 y	β	LS	LS	5	3	AβC
Chromium-51	27.8 d	EC,γ		IC,SC	5	3	9% gamma
Cobalt-58	71.3 d	EC,β^+,γ		IC,SC	10	2	

Table B-1 (continued)

Element-Isotope	Half-Life	Decay	Assay Instrument[a]		Limit of Error[b] (%)	Precision[c] (%)	Remarks
			Calibration	Routine			
Cobalt-60	5.24 y	β,γ	4πC	IC,SC	3	2	Agreement with NBS noted
Copper-64	12.82 h	EC,β^+,β^-,γ	PC	IC,SC	5	2	AβC
Europium-152-154	12.7 y; 16 y	EC,$\beta,\gamma;\beta\gamma$	γS	γS	20	5	
Gallium-72	14.1 h	β,γ	4π	IC,SC	5	2	
Gold-198	2.70 d	β,γ	4πC	IC,SC	3	2	Agreement with NBS noted
Gold-199	3.14 d	β,γ	4πC	IC,SC,γS	10	5	
Hafnium-Tantalum-181	44.6 d; 20 μs	β,γ	γS	γS	10	5	0.48-Mev γ measured. Hf^{175} by γS
Indium-114*m*-114	50 d; 72 s	IT;β,EC,γ	4π	PC	10	4	β disintegration rate reported
Iodine-125	57.4 d	EC,γ		γS	20	5	Sum-coincidence; calibrated
Iodine-129	1.56×10^7 y	β,γ	CC	γS	10	5	
Iodine-130	12.5 h	β,γ	IC	SC,IC	10	2	IC efficiency calculated
Iodine-131	8.05 d	β,γ	4πC	IC,SC	3	2	Agreement with NBS noted
Iridium-192	74.2 d	EC,β,γ	4π	IC,SC	10	2	β disintegration rate reported
Iridium-194	19 h	β,γ	4π	PC	10	5	
Iron-55	2.94 y	EC	X	X	10	5	Fe^{59} content by IC
Iron-59	44.3 d	β,γ	4πC	IC,SC	5	2	Fe^{55} content by x-ray spectrometry
Lanthanum-140	40.3 h	β,γ	4πC	IC,SC	5	2	
Mercury-197m_2-197	24 h; 65 h	IT;EC	γS	γS	10	5	
Mercury-203	45.4 d	β,γ	4πC	IC,SC	5	2	
Molybdenum-Technetium-99*m*	67 h; 6 h	β,γ,IT	4πC	PC	10	2	
Neodymium-147	11.06 d	β,γ	4πC	IC,SC,γS	10	3	Pm^{147} daughter
Nickel-63	125 y	β	PC	LS	10	5	
Niobium-95	35 d	β,γ	4πC	IC,SC	5	2	
Osmium-Iridium-191	16 d; 4.9 s	β;IT	γS	SC,γS	20	5	4π corrected for e^-

Table B-1 (continued)

Element-Isotope	Half-Life	Decay	Assay Instrument[a]		Limit of Error[b] (%)	Precision[c] (%)	Remarks
			Calibration	Routine			
Palladium-Silver-109	13.6 h; 39.2 s	β,γ;IT	PC	PC	10	5	
Phosphorus-32	14.3 d	β	4π	PC	3	2	Agreement with NBS noted
Potassium-42	12.46 h	β,γ	4πC	IC,SC	5	3	
Praseodymium-142	19.2 h	β,γ	4πC	PC	10	5	
Praseodymium-143	13.7 d	β	4π	PC	10	4	
Promethium-147	2.5 y	β	4π	LS,PC	5	3	
Rhenium-186	88.9 h	β(EC),γ	4πC	γS	10	5	
Rubidium-86	18.68 d	β,γ	4πC	γS	10	3	9% gamma
Ruthenium-103	39.7 d	β,γ	4πC	γS	10	5	
Ruthenium-Rhodium-106	371 d; 30 s	$\beta;\beta,\gamma$	4πC	PC	5	3	Rh^{106} daughter measured. 4π source covered with thin Al foil to exclude Ru β
Samarium-153	46.8 h	β,γ	4πC	IC,SC	10	5	
Scandium-46	84.2 d	β,γ	4πC	IC,SC	3	2	
Selenium-75	119.9 d	EC,γ	γS	γS,IC,SC	10	5	Comb. of 0.265 and 0.28-Mev γ assumed 80%
Silver-110*m*-110	249 d; 24.2 s	β,γ	4πC	IC,SC	10	2	
Silver-111	7.5 d	β,γ	γS	PC	10	5	
Sodium-24	15.05 h	β,γ	4πC	IC,SC	3	2	Agreement with NBS noted
Strontium-Rubidium-85	64 d; $\sim$0.9 μs	EC;IT	IC	IC,SC	10	2	IC efficiency calculated
Strontium-89	50.5 d	β	4π	PC	5	3	Sr^{90} content by Al absorption data on separated Sr
Strontium-Yttrium-90	28 y; 64.4 h	β	4π	PC	10	5	Sr^{89} by Al absorption
Sulfur-35	89.0 d	β	4π	LS	10	3	
Tantalum-182	115.1 d	β,γ	4π	IC,SC	10	3	
Technetium-99	2.12×10^5 y	β	(4π)[d]	LS	10	3	

Table B-1 (continued)

Element-Isotope	Half-Life	Decay	Assay Instrument[a]		Limit of Error[b] (%)	Precision[c] (%)	Remarks
			Calibration	Routine			
Thallium-204	3.57 y	β(EC)	4π	LS,PC	10	2	β disintegration rate reported
Thulium-170	129 d	β,γ	4πC	PC	10	3	EC $\leq$ 0.3%
Tin-Indium-113	119 d; 105 m	EC;IT	IC	IC,γS	10	2	In^{113m} daughter γ measured. IC efficiency calculated
Tungsten-185	75.8 d	β	PC	PC	10	3	AβC. W^{181} by γS
Tungsten-187	24.0 h	β,γ	4π	IC,SC	10	3	
Yttrium-90	64.4 h	β	4π	PC	5	3	
Yttrium-91	59.1 d	$\beta(\gamma)$	4π	PC	5	3	
Zinc-65	246.4 d	EC,$\gamma(\beta^+)$	X-γC	IC,SC	5	2	
Zirconium-Niobium-95	65 d; 35 d	β,γ	4πC	IC,SC	5	5	Separation made

[a]IC = ionization chamber; SC = well-type scintillation counter; 4πC = 4π β-γ coincidence counter; GM = end-window Geiger-Mueller counter; X = x-ray proportional counter spectrometer; X-γC = x-ray-gamma coincidence counter; γS = gamma spectrometer; CC = coincidence counter (external sample); PC = windowless 2π proportional counter; LS = liquid scintillation counter; AβC = absolute beta counting.

[b]Estimated limit of error in disintegration-rate concentration of routing shipment.

[c]Estimated precision of measurement (95% C.L.) indicates reproducibility.

[d]Actually determined by a polarographic method.

BIBLIOGRAPHY

Measurements and Standards of Radioactivity, National Academy of Science–National Research Council Publication 573, Washington, D.C., 1958.

Metrology of Radionuclides, International Energy Agency, Vienna, 1960.

Chetham-Strode, A., J. R. Tarrant, and R. J. Silva, *IRE Trans. Nucl. Sci.* **8**(1), 59 (1961).

Crouthamel, C. E. (ed.), *Applied Gamma-Ray Spectrometry*, Pergamon, New York, 1960.

Friedlander, G., and J. W. Kennedy, *Nuclear and Radiochemistry*, Wiley, New York, 1955.

Heath, R. L., *Scintillation Spectrometry Gamma-Ray Spectrum Catalogue*, IDO-16408 (1957).

Lazar, N. H., R. C. Davis, and P. R. Bell, *Nucleonics* **14**(4), 52 (1956).

Meites, L. (ed.), *Handbook of Analytical Chemistry*, McGraw-Hill, New York, 1963.

Overman, R. T., and H. M. Clark, *Radioisotope Techniques*, McGraw-Hill, New York, 1960.

Price, W. J., *Nuclear Radiation Detection*, McGraw-Hill, New York, 1960.

Reynolds, S. A., *Record Chem. Progr.* **16**, 99 (1955) (Wayne State University, Detroit).

Rosenblum, C., *Nucleonics* **14**(5), 58 (1956).

Appendix C. Calculation of the Specific Activity of Radioisotopes Produced by Neutron Capture

In this appendix calculations are given for the reactor production of radioisotopes with burnup of the target atoms and burnup of the product radioisotope being taken into account. The capture of a neutron by a target element A to give a product B which disappears by decay and by reaction with another neutron can be represented as follows:

$$A \xrightarrow[\sigma_A]{} B \begin{cases} \xrightarrow{T_B} \\ \xrightarrow[\sigma_B]{} \end{cases} .$$

The differential equation for the number of atoms of the target isotope A as a function of time is

$$\frac{dN_A}{dt} = -\Phi\sigma_A N_A \ . \qquad (1)$$

The differential equation for the number of atoms of B at any time, t, is

$$\frac{dN_B}{dt} = \Phi\sigma_A N_A - \left(\frac{0.693}{T_B} + \Phi\sigma_B\right) N_B \ . \qquad (2)$$

The solution to this set of equations with appropriate factors introduced to convert the activity from counts per second to curies per gram of target element is[1,2]

$$\text{Activity (curies/g)} = \frac{1.128 \times 10^{13}\ (I/WT_B)\ \Phi\sigma_A}{(0.693/T_B) + \Phi\sigma_B - \Phi\sigma_A}$$

$$\times \left[\exp(-\Phi\sigma_A t) - \exp\left(-\frac{0.693}{T_B}t - \Phi\sigma_B t\right)\right] , \qquad (3)$$

where

Φ = neutron flux (neutrons cm^{-2} sec^{-1}),

σ_A = capture cross section of A (cm^2),

σ_B = burnup cross section of B (cm^2),

T_B = half-life of B (sec),

I = decimal isotopic abundance of A,

W = atomic weight of target element (g).

Equation (3) has been programmed in FORTRAN language for the CDC 1604-A computer[2] at ORNL. More complex calculations for the production of several isotopes were done on the IBM 7090 with the use of the CRUNCH code.[3]

These computer codes were used to calculate the buildup of activity in various targets irradiated in the Low Intensity Testing Reactor (average flux of 2×10^{13} neutrons cm^{-2} sec^{-1}), the Oak Ridge Research Reactor (average flux of 2×10^{14} neutrons cm^{-2} sec^{-1}), and the High-Flux Isotope Reactor now under construction (average flux of 2×10^{15} neutrons cm^{-2} sec^{-1}). The input data on cross sections, half-lives, and abundances were taken, with a few exceptions, from the *Chart of the Nuclides*.[4] The results are presented in Tables C-1 to C-3.

The specific activities listed in the tables are calculated (theoretical) values. In practice, it may be difficult to attain these calculated yield values in some cases. For example, materials with high neutron capture cross sections will

[1] R. D. Evans, *The Atomic Nucleus*, p. 477, McGraw-Hill, New York, 1955.

[2] A. R. Jenkins and C. W. Friend, *Radioisotopes Production 1 – Computer Program for Calculating the Optimum Irradiation Time and Maximum Activity Concentration for Simple (n,γ), (n,p), or (n,α) Reactions*, ORNL Report (in preparation).

[3] H. C. Claiborne and M. P. Lietzke, *CRUNCH – An IBM 704 Code for Calculating N Successive First-Order Reactions*, ORNL-2958 (October 1960).

[4] *Chart of the Nuclides*, Knolls Atomic Power Laboratory, U.S. Atomic Energy Commission, 6th Ed., 2d printing, revised to December 1962.

Table C-1. Specific Activity as a Function of Irradiation Time at a Neutron Flux of 2×10^{13} Neutrons cm^{-2} sec^{-1}

(Specific activities given under irradiation times are in curies per gram of target element)

Product Radioisotope	Half-Life $T_{1/2}$	Target Isotope	Abundance of Target Isotope (%)	Activation Cross Section ($10^{-24}cm^2$)	Irradiation Time in Half-Life Units[a]									T_{max} (days)	Activity at T_{max} (curies/g)	Burnup Cross Section of Product ($10^{-24}cm^2$)
					0.01	0.03	0.05	0.10	0.30	0.50	1.00	3.00	5.00			
^{24}Na	15 h	^{23}Na	100	0.53	0.0518	0.154	0.256	0.502	1.409	2.198	3.752	6.5666	7.27	12.6	7.50	
^{36}Cl	3×10^5 y	^{35}Cl	75.53	45										8914	0.0064	90
^{42}K	12.4 h	^{41}K	6.88	1.1	0.0043	0.0130	0.0215	0.0422	0.118	0.1845	0.315	0.551	0.610	10.04	0.630	
^{45}Ca	165 d	^{44}Ca	2.06	0.7	0.0008	0.0024	0.004	0.0078	0.022	0.034	0.058	0.102	0.113	1942	0.117	
^{47}Ca	4.6 d	^{46}Ca	30	0.25	0.0046	0.0139	0.023	0.045	0.126	0.196	0.335	0.586	0.649	84.7	0.67	
^{46}Sc	84 d	^{45}Sc	100	23	1.15	3.43	5.67	11.2	31.2	48.7	83.1	144.8	159.4	650	162.5	0.25
^{51}Cr	27.8 d	^{50}Cr	4.31	17	0.032	0.094	0.156	0.31	0.86	1.34	2.29	4.00	4.43	271	4.55	
^{55}Fe	2.7 y	^{54}Fe	5.82	2.5	0.006	0.017	0.029	0.057	0.159	0.25	0.42	0.74	0.81	7287	0.82	
^{59}Fe	45 d	^{58}Fe	0.33	1	0.0001	0.0004	0.0007	0.001	0.0036	0.0056	0.0096	0.017	0.019	591	0.019	
^{63}Ni	92 y[c]	^{62}Ni	3.66	15	2.09	6.18	10.1	19.5	50.1	71.4	96.7	61.4	21.9	43,144	99.5	
^{64}Cu	12.9 h	^{63}Cu	69.09	4.5	0.11	0.33	0.54	1.06	2.99	4.66	7.96	13.9	15.4	9.32	15.9	
^{65}Zn	245 d	^{64}Zn	48.89	0.47	0.008	0.024	0.039	0.077	0.21	0.34	0.57	1.00	1.11	2884	1.14	
^{72}Ga	14.1 h	^{71}Ga	39.60	5	0.064	0.19	0.31	0.62	1.74	2.71	4.62	8.09	8.96	10	9.24	
^{76}As	26.5 h	^{75}As	100	4.3	0.13	0.39	0.64	1.25	3.51	5.47				18.1	18.7	
^{75}Se	120 d	^{74}Se	0.87	30	0.007	0.022	0.036	0.072	0.200	0.310	0.54	0.93	1.02	824	1.03	
^{82}Br	35.7 h	^{81}Br	49.46	3	0.04	0.12	0.21	0.40	1.13	1.77	3.02	5.28	5.86	24.5	6.04	
^{86}Rb	18.7 d	^{85}Rb	72.15	1	0.019	0.056	0.094	0.18	0.52	0.80	1.37	2.40	2.66	269	2.75	
^{85}Sr	64 d	^{84}Sr	0.56	1	0.0001	0.0004	0.0007	0.0014	0.004	0.006	0.010	0.018	0.020	808	0.021	
^{99}Mo	66 h	^{98}Mo	23.78	0.15	0.0008	0.0025	0.0041	0.0081	0.023	0.035	0.061	0.106	0.117	54.7	0.121	
^{109}Pd	13.5 h	^{108}Pd	26.71	12.2	0.068	0.21	0.34	0.67	1.87	2.92	4.98	8.72	9.66	8.9	9.97	
^{110m}Ag	249 d	^{109}Ag	48.18	2	0.020	0.060	0.099	0.194	0.543	0.844	1.42	2.37	2.46	1120	2.47	
^{109}Cd	1.3 y	^{108}Cd	0.88	0.20[b]	0.00003	0.00010	0.00017	0.00034	0.00096	0.0015	0.0025	0.0045	0.0049	5718	0.0051	
^{115m}Cd	43 d	^{114}Cd	28.86	0.14	0.0008	0.0024	0.0040	0.0078	0.022	0.034	0.059	0.102	0.113	689	0.117	
^{115}Cd	53 h	^{114}Cd	28.86	1.1	0.006	0.019	0.031	0.062	0.173	0.269	0.460	0.804	0.891	38.3	0.92	
^{114m}In	50 d	^{113}In	4.28	8	0.007	0.020	0.033	0.065	0.182	0.284	0.485	0.848	0.937	470	0.96	
^{113}Sn	118 d	^{112}Sn	0.96	1.3	0.0002	0.0007	0.0012	0.0023	0.0064	0.010	0.017	0.030	0.033	1340	0.034	
^{122}Sb	2.8 d	^{121}Sb	57.25	6.06	0.064	0.191	0.316	0.621	1.74	2.72	4.64	8.12	9.00	40.7	9.27	
^{124}Sb	60 d	^{123}Sb	42.75	3.315	0.026	0.078	0.128	0.251	0.69	1.06	1.73	2.72	2.88	525	2.91	2000
^{125}Sb	2.7 y	^{124}Sn	5.94	0.204	0.00023	0.00068	0.0011	0.0022	0.0062	0.0097	0.017	0.029	0.032	10,811	0.033	
^{130}I	12.5 h	^{129}I	50	31	0.27	0.81	1.34	2.64	7.41	11.6	19.7	34.5	38.2	7.6	39.4	1.0
^{134}Cs	2.13 y	^{133}Cs	100	32.6	0.55	1.64	2.70	5.29	14.5	22.2	36	53.7	52.8	2806	54.1	134
^{131}Ba	11.6 d	^{130}Ba	0.101	8.8	0.00015	0.00043	0.00072	0.0014	0.0040	0.0062	0.011	0.018	0.020	139	0.021	
^{133}Ba	7.5 y	^{132}Ba	0.097	7	0.00011	0.00033	0.00064	0.0011	0.0030	0.0053	0.0079	0.013	0.014	12,616	0.014	
^{140}La	40.2 h	^{139}La	99.911	8.9	0.14	0.43	0.71	1.40	3.91	6.10	10.4	18.2	20.2	24.7	20.8	
^{142}Pr	19.2 h	^{141}Pr	100	12	0.19	0.57	0.94	1.86	5.20	8.12	13.9	24.3	26.9	12.3	27.7	20
^{153}Sm	46.7 h	^{152}Sm	26.72	220	0.88	2.62	4.33	8.52	23.9	37.3	63.6	111	123	19.2	126	
^{152}Eu	13 y	^{151}Eu	47.82	7000	28.35	28.27	16.11	2.46	0.0006					86	32.7	5000
^{154}Eu	16 y	^{153}Eu	52.18	320	2.27	5.70	8.00	10.6	7.87	4.24	0.85	0.0013		768	10.9	1400
^{170}Tm	127 d	^{169}Tm	100	125	1.66	4.95	8.19	16.1	44.8	69.5	117	193	202	596	202	150
^{181}Hf	45 d	^{180}Hf	35.24	10	0.044	0.13	0.22	0.43	1.21	1.88	3.21	5.60	6.18	440	6.35	40
^{182}Ta	115 d	^{181}Ta	99.988	21	0.26	0.74	1.18	2.15	4.53	5.58	6.30	6.36	6.30	195	6.39	17,000
^{185}W	74 d	^{184}W	30.64	2.1	0.008	0.023	0.039	0.076	0.21	0.33	0.57	1.00	1.10	839	1.14	
^{187}W	24 h	^{186}W	28.41	40	0.14	0.41	0.69	1.35	3.78	5.89	10.1	17.6	19.5	13.3	20.1	90
^{186}Re	90 h	^{185}Re	37.07	110	0.49	1.47	2.43	4.77	13.4	20.9	35.6	62.3	68.9	37.3	70.8	
^{192}Ir	74 d	^{191}Ir	37.30	1000	4.36	13.0	21.4	41.8	115	175	283	392	340	205	393	700
^{194}Ir	19 h	^{193}Ir	62.70	120	0.88	2.62	4.34	8.53	23.9	37.3	63.7	111	123	9.5	127	
^{198}Au	64.8 h	^{197}Au	100	99	1.13	3.36	5.56	10.9	30.2	46.6	77.5	127	137	24.8	139	26,000
^{203}Hg	47 d	^{202}Hg	29.80	3	0.010	0.030	0.049	0.097	0.27	0.42	0.73	1.27	1.40	540	1.45	
^{204}Tl	3.8 y	^{203}Tl	29.50	11	0.036	0.11	0.18	0.35	0.97	1.50	2.55	4.29	4.54	6802	4.54	
^{210}Bi	5 d	^{209}Bi	100	0.015	0.00016	0.00048	0.00080	0.0016	0.0044	0.0068	0.012	0.020	0.023	112	0.023	

[a]Half-life units, $t/T_{1/2}$, where t is time of irradiation and $T_{1/2}$ is the half-life of the product isotope.
[b]Average of experimental values obtained in the Oak Ridge Research Reactor by R. E. Lewis.
[c]This half-life is an average of three widely spaced experimental values: 66, 86, and 125.

Table C-2. Specific Activity as a Function of Irradiation Time at a Neutron Flux of 2×10^{14} Neutrons cm^{-2} sec^{-1}

(Specific activities given under irradiation times are in curies per gram of target element)

Product Radioisotope	Half-Life $T_{1/2}$	Target Isotope	Abundance of Target Isotope (%)	Activation Cross Section ($10^{-24}cm^2$)	Irradiation Time in Half-Life Units[a]									T_{max} (days)	Activity at T_{max} (curies/g)	Burnup Cross Section of Product ($10^{-24}cm^2$)
					0.01	0.03	0.05	0.10	0.30	0.50	1.00	3.00	5.00			
^{24}Na	15 h	^{23}Na	100	0.53	0.518	1.544	2.556	5.025	14.09	21.98	37.52	65.66	72.7	10.6	75.04	
^{36}Cl	3×10^5 y	^{35}Cl	75.53	45										891	0.0064	90
^{42}K	12.4 h	^{41}K	6.88	1.1	0.043	0.130	0.215	0.422	1.18	1.845	3.15	5.51	6.10	8.32	6.30	
^{45}Ca	165 d	^{44}Ca	2.06	0.7	0.0081	0.024	0.040	0.078	0.22	0.343	0.585	1.02	1.13	1397	1.15	
^{47}Ca	4.6 d	^{46}Ca	30	0.25	0.046	0.138	0.228	0.449	1.26	1.96	3.35	5.86	6.49	69.4	6.7	
^{46}Sc	84 d	^{45}Sc	100	23	11.5	34.3	56.7	111	311	483	817	1364	1425	386	1428	0.25
^{51}Cr	27.8 d	^{50}Cr	4.31	17	0.317	0.944	1.56	3.07	8.60	13.4	22.8	39.5	43.1	180	43.5	
^{55}Fe	2.7 y	^{54}Fe	5.82	2.5	0.06	0.17	0.29	0.57	1.58	2.46	4.14	6.82	7.02	4227	7.07	
^{59}Fe	45 d	^{58}Fe	0.33	1	0.001	0.004	0.007	0.013	0.036	0.056	0.096	0.17	0.19	442	0.19	
^{63}Ni	92 y[c]	^{62}Ni	3.66	15	20.1	55.1	83.9	135	195	183	132	32.9	8.2	10,607	194.7	
^{64}Cu	12.9 h	^{63}Cu	69.09	4.5	1.10	3.27	5.42	10.7	29.9	46.6	79.6	139	154	7.5	159	
^{65}Zn	245 d	^{64}Zn	48.89	0.47	0.08	0.24	0.39	0.77	2.15	3.35	5.71	9.97	11	2075	11.25	
^{72}Ga	14.1 h	^{71}Ga	39.60	5	0.64	1.90	3.15	6.19	17.4	27.1	46.2	80.9	89.5	8.1	92.4	
^{76}As	26.5 h	^{75}As	100	4.3	1.29	3.84	6.36	12.5	35.1	54.7				14.4	186	
^{75}Se	120 d	^{74}Se	0.87	30	0.074	0.22	0.37	0.72	2.00	3.09	5.20	8.33	8.29	459	8.48	
^{82}Br	35.7 h	^{81}Br	49.46	3	0.42	1.24	2.06	4.05	11.3	17.7	30.2	52.9	58.5	19.5	60.4	
^{86}Rb	18.7 d	^{85}Rb	72.15	1	0.19	0.57	0.94	1.84	5.16	8.05	13.7	24.0	26.6	207	27.4	
^{85}Sr	64 d	^{84}Sr	0.56	1	0.0014	0.0043	0.0071	0.014	0.039	0.061	0.10	0.18	0.20	596	0.21	
^{99}Mo	66 h	^{98}Mo	23.78	0.15	0.008	0.025	0.041	0.081	0.23	0.35	0.61	1.06	1.17	45.6	1.21	
^{109}Pd	13.5 h	^{108}Pd	26.71	12.2	0.69	2.05	3.40	6.68	18.7	29.2	49.8	87.2	96.5	7.04	99.6	
^{110m}Ag	249 d	^{109}Ag	48.18	2	0.20	0.60	0.98	1.91	5.16	7.75	12.0	13.0	8.07	488	14.3	
^{109}Cd	1.3 y	^{108}Cd	0.88	0.20[b]	0.0003	0.0010	0.0017	0.0034	0.0096	0.015	0.025	0.044	0.049	4150	0.050	
^{115m}Cd	43 d	^{114}Cd	28.86	0.14	0.008	0.024	0.040	0.078	0.22	0.34	0.58	1.02	1.13	546	1.17	
^{115}Cd	53 h	^{114}Cd	28.86	1.1	0.063	0.189	0.313	0.616	1.73	2.69	4.60	8.04	8.91	30.9	9.2	
^{114m}In	50 d	^{113}In	4.28	8	0.067	0.200	0.33	0.65	1.82	2.84	4.83	8.32	9.05	308	9.11	
^{113}Sn	118 d	^{112}Sn	0.96	1.3	0.002	0.007	0.012	0.023	0.064	0.100	0.171	0.30	0.328	951	0.34	
^{122}Sb	2.8 d	^{121}Sb	57.25	6.06	0.64	1.91	3.16	6.21	17.4	27.2	46.4	81.1	89.8	31.4	92.5	
^{124}Sb	60 d	^{123}Sb	42.75	3.315	0.26	0.76	1.23	2.29	5.35	7.10	8.87	9.40	9.34	145	9.41	2000
^{125}Sb	2.7 y	^{124}Sn	5.94	0.204	0.0023	0.0068	0.011	0.022	0.062	0.097	0.166	0.289	0.318	7569	0.324	
^{130}I	12.5 h	^{129}I	50	31	2.72	8.12	13.4	26.4	74.1	116	197	345	382	5.9	393	1
^{134}Cs	2.13 y	^{133}Cs	100	32.6	5.45	15.9	25.7	47.9	108	139	152	72.2	30.1	658	153	134
^{131}Ba	11.6 d	^{130}Ba	0.101	8.8	0.0015	0.0043	0.0072	0.014	0.040	0.062	0.11	0.18	0.20	100	0.21	
^{133}Ba	7.5 y	^{132}Ba	0.097	7	0.0011	0.0033	0.0063	0.011	0.029	0.048	0.067	0.076	0.039	5587	0.082	
^{140}La	40.2 h	^{139}La	99.911	8.9	1.44	4.29	7.10	14	39.1	61	104	182	202	19.1	208	
^{142}Pr	19.2 h	^{141}Pr	100	12	1.91	5.70	9.44	18.6	52	81.2	139	242	268	9.6	277	20
^{153}Sm	46.7 h	^{152}Sm	26.72	220	8.8	26.2	43.3	85.2	239	372	634	1097	1200	12.9	1212	
^{152}Eu	13 y	^{151}Eu	47.82	7000	2.57	0.0007								8.7	32.9	5000
^{154}Eu	16 y	^{153}Eu	52.18	320	10.9	8.26	4.48	0.90	0.0014					78.8	11.3	1400
^{170}Tm	127 d	^{169}Tm	100	125	16.6	49.1	80.8	156	413	607	893	876	553	223	1008	150
^{181}Hf	45 d	^{180}Hf	35.24	10	0.44	1.32	2.19	4.30	12	18.6	31.6	53.7	58.1	285	58.6	40
^{182}Ta	115 d	^{181}Ta	99.988	21	2.21	4.89	6.23	7.33	7.51	7.46	7.29	6.71	6.17	22.4	7.53	17,000
^{185}W	74 d	^{184}W	30.64	2.1	0.079	0.23	0.39	0.76	2.14	3.33	5.69	9.92	10.9	595	11.2	
^{187}W	24 h	^{186}W	28.41	40	1.39	4.14	6.85	13.5	37.8	58.9	101	176	194	10	199	90
^{186}Re	90 h	^{185}Re	37.07	110	4.92	14.7	24.3	47.7	134	208	355	615	673	25	680	
^{192}Ir	74 d	^{191}Ir	37.30	1000	43.2	126	204	379	855	1070	1048	185	18.6	51.8	1126	700
^{194}Ir	19 h	^{193}Ir	62.70	120	8.8	26.2	43.4	85.3	239	373	637	1111	1227	6.9	1256	
^{198}Au	64.8 h	^{197}Au	100	99	11.2	33.1	54.1	103	259	365	505	586	583	8.6	586	26,000
^{203}Hg	47 d	^{202}Hg	29.80	3	0.10	0.30	0.49	0.97	2.72	4.25	7.24	12.63	13.93	385	14.22	
^{204}Tl	3.8 y	^{203}Tl	29.50	11	0.36	1.06	1.75	3.42	9.32	14.1	22.4	27.4	19.7	3122	28.6	
^{210}Bi	5 d	^{209}Bi	100	0.015	0.0016	0.0048	0.0080	0.016	0.044	0.068	0.12	0.20	0.23	95	0.23	

[a]Half-life units, $t/T_{1/2}$, where t is the time of irradiation and $T_{1/2}$ is the half-life of the product isotope.
[b]Average of experimental values obtained in the Oak Ridge Research Reactor by R. E. Lewis.
[c]This half-life is an average of three widely spaced experimental values: 66, 86, and 125.

Table C-3. Specific Activity as a Function of Irradiation Time at a Neutron Flux of 2×10^{15} Neutrons cm^{-2} sec^{-1}

(Specific activities given under irradiation times are in curies/g of target element)

Product Radioisotope	Half-Life $T_{1/2}$	Target Isotope	Abundance of Target Isotope (%)	Activation Cross Section ($10^{-24}cm^2$)	Irradiation Time in Half-Life Units[a]									T_{max} (days)	Activity at T_{max} (curies/g)	Burnup Cross Section of Product ($10^{-24}cm^2$)
					0.01	0.03	0.05	0.10	0.30	0.50	1.00	3.00	5.00			
^{24}Na	15 h	^{23}Na	100	0.53	5.183	15.44	25.56	50.25	140.9	219.8	375.2	656.6	727	8.48	749.9	
^{36}Cl	3×10^5 y	^{35}Cl	75.53	45										89.1	0.0064	90
^{42}K	12.4 h	^{41}K	6.88	1.1	0.435	1.296	2.146	4.219	11.83	18.45	31.50	55.12	61.01	6.61	62.9	
^{45}Ca	165 d	^{44}Ca	2.06	0.7	0.081	0.241	0.398	0.784	2.19	3.41	5.79	9.85	10.54	870	10.54	
^{47}Ca	4.6 d	^{46}Ca	30	0.25	0.46	1.38	2.28	4.49	12.58	19.6	33.5	58.6	64.9	54.2	66.9	
^{46}Sc	84 d	^{45}Sc	100	23	114.8	341	562	1096	2968	4466	6932	7751	5017	170	8420	0.25
^{51}Cr	27.8 d	^{50}Cr	4.31	17	3.17	9.43	15.6	30.6	85	132	219	342	329	97	345	
^{55}Fe	2.7 y	^{54}Fe	5.82	2.5	0.58	1.73	2.86	5.56	14.9	22.2	33.7	33.8	19.3	1797	39	
^{59}Fe	45 d	^{58}Fe	0.33	1	0.013	0.04	0.066	0.13	0.36	0.56	0.96	1.66	1.81	295	1.83	
^{63}Ni	92 y[c]	^{62}Ni	3.66	15	140.3	221	233	228	198	173	122	30.5	7.6	1880	233	
^{64}Cu	12.9 h	^{63}Cu	69.09	4.5	11.0	32.8	54.2	107	299	466	796	1393	1541	5.75	1586	
^{65}Zn	245 d	^{64}Zn	48.89	0.47	0.79	2.35	3.89	7.65	21.4	33.3	56.6	96.3	103	1292	103	
^{72}Ga	14.1 h	^{71}Ga	39.60	5	6.38	19	31.5	61.9	174	271	462	808	894	6.1	92	
^{76}As	26.5 h	^{75}As	100	4.3	12.9	38.4	63.6	125	351	547				10.8	1854	
^{75}Se	120 d	^{74}Se	0.87	30	0.74	2.19	3.61	6.98	18.4	26.8	38.6	31.2	14	183	41.7	
^{82}Br	35.7 h	^{81}Br	49.46	3	4.17	12.4	20.6	40.5	114	177	302	528	583	14.6	599	
^{86}Rb	18.7 d	^{85}Rb	72.15	1	1.89	5.65	9.36	18.4	51.6	80.4	137	239	263	146	270	
^{85}Sr	64 d	^{84}Sr	0.56	1	0.014	0.043	0.071	0.14	0.39	0.61	1.03	1.78	1.93	388	1.95	
^{99}Mo	66 h	^{98}Mo	23.78	0.15	0.08	0.25	0.41	0.81	2.27	3.54	6.05	10.6	11.7	36.4	12.1	
^{109}Pd	13.5 h	^{108}Pd	26.71	12.2	6.88	20.5	33.9	66.7	187	292	498	870	962	5.2	986	
^{110m}Ag	249 d	^{109}Ag	48.18	2	1.97	5.67	9.06	16.3	32.7	37.5	32.6	8.63	2.16	141	37.7	
^{109}Cd	1.3 y	^{108}Cd	0.88	0.20[b]	0.003	0.010	0.017	0.034	0.095	0.149	0.253	0.432	0.465	2626	0.466	
^{115m}Cd	43 d	^{114}Cd	28.86	0.14	0.081	0.24	0.40	0.78	2.20	3.43	5.85	10.2	11.3	404	11.6	
^{115}Cd	53 h	^{114}Cd	28.86	1.1	0.63	1.89	3.13	6.16	17.3	26.9	46.0	80.4	88.9	23.6	91.5	
^{114m}In	50 d	^{113}In	4.28	8	0.67	2.00	3.30	6.47	17.9	27.7	45.8	69.4	64.4	161	69.5	
^{113}Sn	118 d	^{112}Sn	0.96	1.3	0.02	0.07	0.117	0.23	0.64	1.00	1.69	2.84	3.00	578	3.00	
^{122}Sb	2.8 d	^{121}Sb	57.25	6.06	6.40	19.1	31.6	62.1	174	271	463	807	889	22.2	906	
^{124}Sb	60 d	^{123}Sb	42.75	3.315	2.36	5.81	8.05	10.8	12.1	12.1	11.9	11.1	10.3	18	12.1	2000
^{125}Sb	2.7 y	^{124}Sn	5.94	0.204	0.023	0.068	0.113	0.222	0.621	0.964	1.63	2.72	2.83	4481	2.84	
^{130}I	12.5 h	^{129}I	50	31	27.2	81.2	134	264	740	1154	1969	3432	3782	4.2	3858	1
^{134}Cs	2.13 y	^{133}Cs	100	32.6	49.3	118	159	190	102	43.2	4.8	0.0008		79	190	134
^{131}Ba	11.6 d	^{130}Ba	0.101	8.8	0.015	0.043	0.072	0.141	0.394	0.614	1.04	1.78	1.91	63	1.91	
^{133}Ba	7.5 y	^{132}Ba	0.097	7	0.011	0.032	0.058	0.092	0.189	0.223	0.197	0.053	0.0074	1635	0.223	
^{140}La	40.2 h	^{139}La	99.911	8.9	14.4	42.9	71	140	391	610	1040	1814	2000	13.6	2041	
^{142}Pr	19.2 h	^{141}Pr	100	12	19.1	57	94.4	186	520	811	1383	2411	2660	7	2722	20
^{152}Sm	46.7 h	^{152}Sm	26.72	220	88	262	433	849	2362	3655	6108	9631	9398	7	9742	
^{152}Eu	13 y	^{151}Eu	47.82	7000										0.87	32.9	5000
^{154}Eu	16 y	^{153}Eu	52.18	320	0.90	0.0014								7.9	11.3	1400
^{170}Tm	127 d	^{169}Tm	100	125	161	453	705	1193	1836	1578	615	3.50	0.015	38.2	1836	150
^{181}Hf	45 d	^{180}Hf	35.24	10	4.43	13.1	21.7	42.2	114	171	269	357	323	124	358	40
^{182}Ta	115 d	^{181}Ta	99.988	21	7.45	7.65	7.58	7.43	6.83	6.28	5.10	2.21	0.96	2.3	7.67	17,000
^{185}W	74 d	^{184}W	30.64	2.1	0.79	2.34	3.88	7.62	21.3	33.1	56.1	94.5	99.9	361	99.9	
^{187}W	90 h	^{186}W	37.07	110	49.2	147	242	476	1324	2049	3426	5422	5316	13.7	5493	
^{186}Re	24 h	^{185}Re	28.41	40	13.9	41.4	68.5	135	376	586	995	1709	1862	6.6	1880	90
^{192}Ir	74 d	^{191}Ir	37.30	1000	391	939	1251	1432	471	88.8	0.86			6.6	1441	700
^{194}Ir	19 h	^{193}Ir	62.70	120	88	262	434	853	2386	3716	6313	10,793	11,616	4.4	11,638	
^{198}Au	64.8 h	^{197}Au	100	99	106	282	418	637	856	866	847	773	704	1.2	866	26,000
^{203}Hg	47 d	^{202}Hg	29.80	3	1	2.98	4.94	9.70	27.1	42.2	71.6	121	128	235	128	
^{204}Tl	3.8 y	^{203}Tl	29.50	11	3.52	10.2	16.5	30.4	66.1	81	79	23	5.76	95.4	84.4	
^{210}Bi	5 d	^{209}Bi	100	0.015	0.016	0.048	0.080	0.16	0.44	0.68	1.17	2.04	2.26	78.6	2.34	

[a]Half-life units, $t/T_{1/2}$, where t is time of irradiation and $T_{1/2}$ is the half-life of the product isotope.
[b]Average of experimental values obtained in the Oak Ridge Research Reactor by R. E. Lewis.
[c]This half-life is an average of three widely spaced experimental values: 66, 86, and 125.

cause a decrease in neutron flux near the target, and lower yields will be obtained. However, these calculated values can serve as useful guides.

Irradiation times in the reactor are conveniently expressed as fractions of half-lives. For radioisotopes with short half-lives, a sample may be irradiated for a period of five half-lives or longer. Thus, ^{42}K with a half-life of 12.4 hr is usually irradiated for 60 hr. For radioisotopes with a half-life from one week to a few months, the irradiation time will usually vary from one to three half-life periods because the increase in specific activity is not great beyond a period of three half-lives. In producing radioisotopes with very long half-lives, such as ^{36}Cl ($T_{1/2} = 3 \times 10^5$ yr) and ^{14}C ($T_{1/2} = 5770$ yr), it is obvious that for practical reasons the irradiation period must be a small fraction of a half-life. Hence, the tables show the buildup of a radioisotope in curies per gram of irradiated material for irradiation times varying from 0.01 to 5.0 half-life units. The half-life of the radioisotope is among the most important factors in determining how long to irradiate a target in the reactor.

The time in a reactor is usually shortened considerably if the radioisotope product itself has a high capture burnup cross section for neutrons. The data in Tables C-1 to C-3 show that if the half-life of the radioisotope is short or only moderately long, the value of the burnup cross section has only a slight effect on the irradiation time.

Burnup becomes more significant with longer-lived radioisotopes. For example, on irradiating ^{35}Cl to produce long-lived ^{36}Cl, maximum specific activity is obtained by irradiating the target for a small fraction of a half-life (891 days) at a flux of 2×10^{14} neutrons cm^{-2} sec^{-1}. The 90-barn burnup cross section of ^{36}Cl in this case limits the specific activity of ^{36}Cl that can be obtained.

In many cases the burnup cross section is not known and thus possibly can explain the variation in reported reactor yields. An experimental value of 0.20 barn for the reaction $^{108}Cd(n,\gamma)^{109}Cd$ for target irradiation periods of 1.5 to 2.0 years was obtained from the ORR. Recently Beda *et al.*[5] reported a value of 2.7 barns for this same reaction after a short irradiation lasting a few days. These two results can be reconciled (mathematically) if it is assumed that the burnup cross section of ^{109}Cd is about 1400 barns.

The values of T_{max} give the irradiation time in days at which the specific activity of the product radioisotope passes through a maximum. It is not recommended that the value of T_{max} be considered as a desirable irradiation time except for short-lived radioisotopes.

---

[5] A. G. Beda, L. N. Kondrat'ev, and E. F. Tret'Yakov, "The Activation Cross Section of ^{108}Cd by Thermal Neutrons," *At. Energ.* **16**(2), 145–46 (1964).

Appendix D. Bibliography

The following selected publications from Oak Ridge National Laboratory cover work on isotopes processing from about 1947 to 1964. A comprehensive list of ORNL publications covering several aspects of work with isotopes, including applications, has recently been compiled by the Isotopes Information Center: R. H. Lafferty, Jr., P. S. Baker, and Martha W. Gerrard, *Publications on Isotopes at Oak Ridge National Laboratory, 1946–1963*, ORNL-IIC-1 (July 1964).

Aebersold, P. C., and A. F. Rupp, "Radioisotope Production in the United States," *Nucleonics* **10**(1), 24–27 (1952).

Aebersold, P. C., and A. F. Rupp, "Production of Short-Lived Radioisotopes," in *Production and Use of Short-Lived Radioisotopes from Reactors*, vol. I, pp. 31–47 (Proceedings of Seminar in Vienna, Nov. 5–9, 1962), IAEA, Vienna, 1963.

Baker, P. S., F. R. Duncan, and L. O. Love, "Cyclotron Targets Using Enriched Stable Isotopes," *Nucl. Sci. Eng.* **7**, 325–26 (1960).

Ballantine, D. S., and W. E Cohn, *The Preparation of Carrier-Free I^{131}*, MDDC-1600, May 1947.

Ballantine, D. S., "Preparation of Carrier-Free Iodine," in *Radiochemical Studies – The Fission Products* (ed. by C. D. Coryell and N. Sugarman), Bk. 3, pp. 1639–41, McGraw-Hill, New York, 1951; also AECD-2556B.

Ballou, N. E., "Preparation of Carrier-Free Cerium Tracer," in *Radiochemical Studies – The Fission Products* (ed. by C. D. Coryell and N. Sugarman), Bk. 3, pp. 1740–3, McGraw-Hill, New York, 1951; also AECD-2530I.

Ballou, N. E., "Preparation of Carrier-Free Trivalent Rare Earth Tracer," in *Radiochemical Studies – The Fission Products* (ed. by C. D. Coryell and N. Sugarman), Bk. 3, pp. 1737–39, McGraw-Hill, New York, 1951; also AECD-2530H.

Boyd, G. E., "Production, Availability and Economics of Reactor By-Products," in *Proc. Conf. Peaceful Uses At. Energy, Tokyo, Osaka, and Nagoya, Japan, May 1957*, pp. 161–66, Japan Atomic Industrial Forum, Tokyo, 1957.

Bruce, F. R., "Solvent Extraction Chemistry of the Fission Products," *Proc. Intern. Conf. Peaceful Uses At. Energy, 1st Geneva, 1955* **7**, 100–12 (1956).

Butler, T. A., E. Lamb, and A. F. Rupp, "New Processing Techniques for Radioisotopes at ORNL," in *Radioisotopes in the Physical Sciences and Industry (Proc. Conf. Copenhagen 6–17 Sept. 1960)* II, pp. 407–18, IAEA, Vienna, 1962.

Butler, T. A., and J. J. Pinajian, *Cyclotron-Produced Radioisotopes (I)*, ORNL-TM-663 (October 1963).

Butler, T. A., R. E. Lewis, J. J. Pinajian, and J. E. Ratledge, *Reactor-Produced Radioisotopes (I)*, ORNL-TM-666 (October 1963).

Campbell, E. C., and F. Nelson, "Rapid Ion Exchange Techniques for Radiochemical Separations," *J. Inorg. Nucl. Chem.* **3**, 233–42 (1956).

Cohn, W. E, "Pile Production of Radioactive Isotopes," in Suppl. U. S. Naval Med. Bull., *Preparation and Measurement of Isotopes and Some of Their Medical Aspects* (ed. by L. H. Roddis), pp. 42–51, GPO Washington, D.C., March–April 1948; also MDDC-18 (May 1946).

Cohn, W. E, *Separation of Carrier-Free P^{32} from Sulfur,* MDDC-518 (July 1946).

Early, B. F., "Specialized Devices for Manipulator Cell Operations," in *Fourth Annual Symposium on Hot Laboratories and Equipment in Washington, D.C., September 1955,* TID-5280.

Emlet, L. B., "Radioisotopes," *Chem. Eng. Progr.* **46**, 591–94 (1950).

Finkle, B., and W. E Cohn, "Preparation of Carrier-Free 10d Cs^{131} Tracer," in *Radiochemical Studies – The Fission Products* (ed. by C. D. Coryell and N. Sugarman), Bk. 3, pp. 1654–56 McGraw-Hill, New York, 1951; also AECD-2556-F.

Finkle, B., and W. E Cohn, "Preparation of Carrier-Free 13.8 d Pr^{143} Tracer," in *Radiochemical Studies – The Fission Products* (ed. by C. D. Coryell and N. Sugarman), Bk. 3, pp. 1744–46, McGraw-Hill, New York, 1951; also MDDC-1493AA.

Gillette, J. H., P. S. Baker, E. E. Beauchamp, and E. Lamb, "The Production and Separation of Isotopes at ORNL," *Rass. Intern. Elettron. Nucl., 7 Rass.; 5 Congr. Nucl., Rome, 1960* **2**, 13–42 (1960); also TID-7601, p. 25.

Gissel, W. Y., and J. N. Butler, *Separation of Phosphorus-32 from Sulfur-32,* AECD-2850 (1947).

Gleason, G. I., I. J. Gruverman, and J. L. Need, "Practical Production Yields of Radionuclides with 17-Mev and 21-Mev Protons," *Intern. J. Appl. Radiation Isotopes* **13**, 223–28 (1962).

Green, F. L., and J. A. Martin, "Maximizing Production of Radioisotopes in a Cyclotron," *Nucl. Sci. Eng.* **7**, 387–91 (1960).

Khym, J. X., P. C. Tompkins, and W. E Cohn, *Ca^{45} Production from Scandium in the Pile, Radiation Characteristics, and Preparation in Carrier-Free Form,* MDDC-1214 (February 1946).

Lamb, E., "Special Features of New Radioisotope Processing Cells," in *Fourth Annual Symposium on Hot Labs and Equipment,* p. 311, TID-5280 (September 1955).

Lamb, E., H. E. Seagren, and E. E. Beauchamp, "Fission Product Pilot Plant and Other Develments in the Radioisotope Program at ORNL," *Proc. Intern. Conf. Peaceful Uses At. Energy, 2nd Geneva, 1958* **20**, 38–44 (1958).

Lamb, E., *Electrical Discharge in Shielding Window Glass of Multi-Kilocurie Cell No. 1, Building 3029,* ORNL-CF-60-12-13 (Dec. 9, 1960).

Livingston, R. S., and A. L. Boch, *The Oak Ridge 86-Inch Cyclotron,* ORNL-1196 (June 1952).

McHenry, R. E., "Radioactive Gas Processing Equipment," *Fourth Annual Symposium on Hot Labs and Equipment,* pp. 371–73, TID-5280 (September 1955).

McHenry, R. E., *Production of Xe^{131m}*, ORNL-2289 (June 1957).

Marinsky, J. A., D. N. Hume, and N. E. Ballou, "Preparation of Carrier-Free Zirconium-Niobium Tracer," in *Radiochemical Studies – The Fission Products* (ed. by C. D. Coryell and N. Sugarman), Bk. 3, pp. 1514–16, McGraw-Hill, New York, 1951; also MDDC-1223T.

Martin, J. A., R. S. Livingston, R. L. Murray, and M. Rankin, "Radioisotope Production Rates in a 22-Mev Cyclotron," *Nucleonics* **13**(3), 28–32 (1955).

Martin, J. A., and F. L. Green, "Cyclotron Target for the Irradiation of Chemical Compounds," *Nucl. Sci. Eng.* **1**, 185–90 (1956).

Moore, J. G., and R. H. Rainey, *Extraction of Niobium-95 from Nitric Acid Solutions with Tri-n Butyl Phosphate,* ORNL-3285 (June 1962).

Moore, J. G., "Removal of Niobium-95 from Zirconium Solutions with Vycor Glass," *J. Inorg. Nucl. Chem.* **20**, 166–67 (1961).

Nelson, F., and K. A. Kraus, "Some Techniques for Isolating and Using Short-Lived Radioisotopes," in *Production and Use of Short-Lived Radioisotopes from Reactors,* vol. I, pp. 191–213 (Proceedings of Seminar in Vienna, Nov. 5–9, 1962), IAEA, Vienna, 1963.

Norris, L. D., and A. H. Snell, "Carbon-14 Production from Ammonium Nitrate Solution in the Chain Reacting Pile," *Science* **105**, 265–67 (1947); also MDDC-36.

Norris, L. D., and A. H. Snell, "Radioactive Carbon of High Specific Activity," *Phys. Rev.* **73**, 254–55 (1948); also MDDC-1584.

Norris, L. D., and A. H. Snell, "Production of C^{14} in a Nuclear Reactor," *Nucleonics* **5**(3), 18–27 (1949).

O'Brien, H. A., and J. M. Sullivan, *A Process for Recovering Carrier-Free Iodine-129 from Berl Saddles,* ORNL-TM-469 (1964).

Pierce, E. E., "Operating a Manipulator Cell," *Nucleonics* **12**(11), 86–87 (1954).

Pierce, E. E., *Relative Effectiveness of Decontamination of Various Stainless Steel Surface Finishes,* ORNL-CF-60-6-54 (1960).

Pressly, R. S., and A. F. Rupp, *Purification of Fission Product Rare Earths by Ion Exchange,* ORNL-1313 (January 1953).

Pressly, R. S., "Production and Separation of Rare Earths," in *Rare Earth in Biochemical and Medical Research,* ORINS-12 (1955).

Pressly, R. S., "Preparation of Fission Rare Earth Isotopes," ORNL-2252 (May 1957).

Rupp, A. F., "Large Scale Production of Radioisotopes," *Proc. Intern. Conf. Peaceful Uses At. Energy, 1st Geneva, 1955* **14**, 68–84 (1956).

Rupp, A. F., "Methods of Handling Multikilocurie Quantities of Radioactive Materials," *Proc. Intern. Conf. Peaceful Uses At. Energy, 1st Geneva, 1955,* **14**, 128–35 (1956).

Rupp, A. F., E. E. Beauchamp, and J. R. Farmakes, *Production of Fission Product Iodine-131,* ORNL-1047 (December 1951).

Rupp, A. F., "Production and Separation of Radioisotopes," in *Radioisotopes in Industry* (ed. by J. R. Bradford), pp. 168–89, Reinhold, New York, 1953.

Rupp, A. F., and F. T. Binford, "Production of Radioisotopes," *J. Appl. Phys.* **24**, 1069–81 (1953).

Rupp, A. F., *Radioisotope Production and Process Development – Annual Report for 1954,* ORNL-1861 (May 1955).

Rupp, A. F., "Radioisotope Production," *McGraw-Hill Encyclopedia of Science and Technology,* vol. II, pp. 310–15, McGraw-Hill, New York, 1960.

Rupp, A. F., "Production of Radioisotopes with Very High Specific Radioactivity," pp. 22–29 in *Proc. Fifth Japan Conf. on Radioisotopes May 21–23, 1963, Tokyo,* Japan Atomic Industrial Forum, Tokyo, 1963.

Rupp, A. F., "Oak Ridge Looks at the Nuclides," *Nucleonics* **20**(1), 47–48 (1962).

Russell, H. T., "Miscellaneous Radioisotopes," pp. 411–16 (in G. W. Parker, I. R. Higgins, and J. T. Roberts, "Processing Radioisotopes by Ion Exchange," pp. 391–457) in *Ion Exchange Technology* (ed. by F. C. Nachod and J. Schubert), Academic, New York, 1956.

Russell, H. T., *Recovery and Half-Life Determination of I^{129},* ORNL-2293 (May 1957).

Russell, H. T., "Isolation of Carrier-Free Mn^{54} and I^{125} from Cyclotron Targets," *Nucl. Sci. Eng.* **7**, 323–24 (1960); also ORNL-2330 (July 1957).

Russell, H. T., *Separation of Carrier-Free Silver-111 from Reactor Irradiated Palladium,* ORNL-TM-347 (September 1962).

Russell, H. T., *Production of I^{125} and Fabrication of I^{125} X-Ray Sources,* ORNL-TM-552 (July 1963).

Russell, H. T., *Separation of ^{131}I, ^{132}I, ^{133}Xe, ^{103}Ru, ^{140}Ba, and ^{140}La from Reactor-Irradiated ^{235}U,* ORNL-TM-804 (1964).

Russell, H. T., *Production of ^{109}Cd and Fabrication of ^{109}Cd X-Ray Sources,* ORNL-TM-805 (1964).

Schallert, P. O., *Production Separations of Fission Product Groups for the Radioisotope Program,* ORNL-1144 (July 1952).

Seagren, H. E., *Radioisotope Production and Process Development Annual Report for 1956,* ORNL-2303 (June 1957).

Seagren, H. E., *Isotopes Division Annual Report for 1957,* ORNL-2492 (July 1958).

Shields, R. P., *The Production of C^{14} by the Beryllium Nitride Process,* ORNL-1962 (December 1955).

Snell, A. H., and L. D. Norris, *Production of Carbon-14 from Ammonium Nitrate Solution in the Chain Reactor,* ORNL-388 (October 1949); also MDDC-726.

Thompson, W. E., *ORNL Research and Radioisotope Production,* ORNL-CF-52-1-212 (1952).

ORNL-3633
UC-23 – Isotopes – Industrial Technology
TID-4500 (30th ed.)

INTERNAL DISTRIBUTION

1. Biology Library
2–4. Central Research Library
5. Reactor Division Library
6–7. ORNL Y-12 Technical Library
Document Reference Section
8–32. Laboratory Records Department
33. Laboratory Records, ORNL R.C.
34. E. H. Acree
35. R. G. Affel
36. T. A. Arehart
37. S. I. Auerbach
38–62. P. S. Baker
63. K. R. Balasubramaniam
64. Russell Baldock
65–67. E. E. Beauchamp
68. R. E. Biggers
69. F. T. Binford
70. G. E. Boyd
71. J. C. Bresee
72. F. R. Bruce
73–84. T. A. Butler
85. C. D. Cagle
86–137. F. N. Case
138. L. T. Corbin
139. W. B. Cottrell
140. J. A. Cox
141. G. E. Creek
142. F. L. Culler
143. D. M. Davis
144. W. C. Davis
145. J. S. Eldridge
146. J. F. Emery
147. S. T. Ewing
148. R. L. Ferguson
149. B. R. Fish
150–151. D. A. Fuccillo
152. C. B. Fulmer
153–204. J. H. Gillette
205. K. W. Haff
206. R. L. Hahn
207. J. Halperin
208. P. W. Hembree
209. N. E. Hinkle
210. C. A. Horton
211. F. T. Howard
212. J. T. Howe
213. C. P. Keim
214. M. T. Kelley
215. C. V. Ketron
216. E. H. Kobisk
217. R. H. Lafferty, Jr.
218. C. E. Lamb
219. Eugene Lamb
220. C. E. Larson
221–223. L. O. Love
224. W. S. Lyon
225. B. J. Massey
226. H. F. McDuffie
227. R. E. McHenry
228. R. A. McNees
229. F. L. Moore
230. A. H. Narten
231. Fred Nelson
232. R. G. Niemeyer
233. P. B. Orr
234. C. L. Ottinger
235. G. W. Parker
236. H. A. Parker
237–238. R. B. Parker
239. L. F. Parsly
240. J. J. Pinajian
241. R. S. Pressly
242. M. E. Pruitt
243. M. E. Ramsey
244. S. A. Reynolds
245. S. J. Rimshaw
246–248. R. A. Robinson
249. W. J. Ross
250–256. A. F. Rupp
257. H. T. Russell
258. G. S. Sadowski
259–266. R. W. Schaich
267. H. E. Seagren
268. J. R. Sites
269. M. J. Skinner
270. J. A. Swartout
271. E. H. Taylor
272. V. C. A. Vaughen
273. Boyd Weaver
274. A. M. Weinberg

275. R. L. Wesley
276. M. E. Whatley
277. J. C. White
278. G. C. Williams
279. J. P. Witherspoon
280. E. I. Wyatt
281. R. G. Wymer
282. D. Zucker

EXTERNAL DISTRIBUTION

283. P. C. Aebersold, Div. of Isotopes Development, AEC, Washington, D.C.
284. A. Berman, Div. of Isotopes Development, AEC, Washington, D.C.
285. O. M. Bizzell, Div. of Isotopes Development, AEC, Washington, D.C.
286. B. F. Boardman, Phillips Petroleum Company, Idaho Falls, Idaho
287. H. D. Bruner, Div. of Biology and Medicine, AEC, Washington, D.C.
288. J. T. Cristy, AEC, Richland Operations Office, Richland, Washington
289. D. C. Davis, Research and Development Div., ORO-AEC, Oak Ridge, Tenn.
290–591. E. E. Fowler, Div. of Isotopes Development, AEC, Washington, D.C.
592. R. N. Goslin (Consultant), Oglethorpe Univ., Oglethorpe, Georgia
593. V. R. Grove, Mound Laboratory, Miamisburg, Ohio
594. J. W. Hitch, Div. Of Licensing and Regulations, AEC, Washington, D.C.
595. I. A. Hobbs, AEC, Savannah River Laboratory, Aiken, South Carolina
596. J. W. Irvine (Consultant) 6-426, MIT, Cambridge 39, Mass.
597. T. R. Jones, Div. of Research, AEC, Washington, D.C.
598. B. F. Judson, General Electric Co., HAPO, Richland, Washington
599. G. A. Kolstad, Div. of Research, AEC, Washington, D.C.
600. P. W. McDaniel, Div. of Research, AEC, Washington, D.C.
601. J. E. Machurek, Div. of Isotopes Development, AEC, Washington, D.C.
602. B. Manowitz, Brookhaven National Laboratory, Upton, L.I., N.Y.
603. R. B. Martin, Research and Development Div., AEC-ORO, Oak Ridge, Tenn.
604. J. W. Morris, SRL, E. I. duPont, Aiken, South Carolina
605. F. K. Pittman, Div. of Reactor Development, AEC, Washington, D.C.
606. W. H. Reas, General Electric Co., HAPO, Richland, Washington
607. G. L. Rogosa, Div. of Research, AEC, Washington, D.C.
608. G. J. Rotariu, Div. of Isotopes Development, AEC, Washington, D.C.
609. H. M. Roth, Research and Development Div., AEC-ORO, Oak Ridge, Tenn.
610. L. G. Stang, Hot Lab Div., Brookhaven National Laboratory, Upton, L.I., N.Y.
611. V. R. Thayer, Atomic Energy Div., E. I. duPont, Wilmington, Delaware
612. J. Vanderryn, Office of the General Manager, AEC, Washington, D.C.
613. Research and Development Division, AEC, ORO
614–1106. Given distribution as shown in TID-4500 (30th ed.) under Isotopes – Industrial Technology (75 copies – OTS)