THE ADVANCED HIGH-TEMPERATURE REACTOR: MATCHING NUCLEAR ENERGY SYSTEMS TO THERMOCHEMICAL HYDROGEN PRODUCTION

Charles W. Forsberg[1] and Paul S. Pickard[2]

[1]Oak Ridge National Laboratory[*]
P.O. Box 2008
Oak Ridge, Tennessee 37831-6179
Tel: (865) 574-6783
Fax: (865) 574-9512
E-mail: **forsbergcw@ornl.gov**

[2]Sandia National Laboratories
P.O. Box 5800; Albuquerque, NM 87185
Tel: (505) 845-3046
E-mail: pspicka@sandia.gov

Prepared for Presentation at
American Institute of Chemical Engineers' Spring National Meeting
March 12, 2002
Session 139: Hydrogen and Nuclear Power

Manuscript Date: May 1, 2002
File Name: Hydrogen:AHTR.AIChE.2002.article

Unpublished

AIChE shall not be responsible for statements or opinions contained in papers or printed in its publications

American Institute of Chemical Engineers
3 Park Ave, New York, NY 10016-5991

The submitted manuscript has been authored by a contractor of the U.S. Government under contract DE-AC05-00OR22725. Accordingly, the U.S. Government retains a nonexclusive, royalty-free license to publish or reproduce the published form of this contribution, or allow others to do so, for U.S. Government purposes.

---

[*]Oak Ridge National Laboratory, managed by UT-Battelle, LLC, for the U.S. Department of Energy under contract DE-AC05-00OR22725.

THE ADVANCED HIGH-TEMPERATURE REACTOR: MATCHING NUCLEAR ENERGY SYSTEMS TO THERMOCHEMICAL HYDROGEN PRODUCTION

C. W. Forsberg and P. S. Pickard

ABSTRACT

The demand for hydrogen (H_2) for the conversion of crude oil into clean fuels is growing rapidly. In the longer term, H_2 may replace liquid fuels. Nuclear energy has been proposed as a source of high-temperature heat for production of H_2 using thermochemical cycles. Thermochemical cycles for H_2 production involve a series of chemical reactions in which (1) the overall reaction is "$2H_2O$ + heat 6 $2H_2 + O_2$" and (2) all the other chemicals used in intermediate steps are recycled within the process. These cycles require high-temperature heat input (>750EC) and the interfacing of a nuclear plant with a chemical plant. This interface imposes requirements on both plants. A new type of nuclear power reactor will be required to efficiently meet these requirements.

The proposed Advanced High-Temperature Reactor (AHTR) uses a coated-particle graphite fuel and molten-salt coolant to deliver the heat at the required high temperatures and the preferred low pressures. The paper describes (1) leading thermochemical cycles for H_2 production, (2) resultant interface requirements for using nuclear energy for production of H_2, (3) the implications of those requirements for the nuclear reactor, and (4) the AHTR.

1. INTRODUCTION

Hydrogen production may be the future of nuclear energy. There is rapid growth in H_2 demand to convert heavier (and more abundant) crude oils to clean liquid fuels (Forsberg September 2001). Within a decade, the energy consumption to make H_2 for use in refineries and other facilities may equal the energy output of nuclear plants in the United States. If the large-scale research programs and plans of the auto manufacturers are successful, fuel cells will begin to be used in cars before 2010. Fuel cells, which use H_2, are more efficient than internal combustion engines, will reduce air pollution, and will simplify the design and manufacture of cars. Technical revolutions (horses to cars, oil lamps to light bulbs, etc.) typically require 30 to 40 years. If the auto companies succeed, the transportation system will be based on H_2 before 2050.

If H_2 is used in transportation, it is also likely to introduce a second H_2 era for stationary applications. From the late nineteenth century until the mid-twentieth century, most cities used town gas (typically half H_2 with smaller quantities of carbon monoxide, methane, and other gases) for lighting, heating, and other purposes. With the development of the long-distance pipeline, town gas was replaced with natural gas. Pure H_2 is cleaner and more versatile. Cost effective H_2 would replace natural gas or coal in many industrial processes such as steel production. Because H_2 (like natural gas) is storable, such a future would likely see the peak electricity demand met by fuel cells. This implies a world of base-load electric power plants and base-load H_2 production plants. Energy consumption for transportation is about equal to energy consumption for electricity production. Consequently, if fuel cells are successful, H_2 would be expected to replace electricity as the primary energy carrier because of its dual role of (1) transport fuel and (2) fuel for peak electricity production.

Major issues for industrial societies are (1) climatic change from greenhouse gases, and (2) secure energy supplies. How H_2 is made may determine if these issues are successfully addressed. Most H_2 today is made by steam reforming of natural gas. There is research to convert gasoline onboard cars to H_2 for use in fuel cells. Alternatively, nuclear energy can be used to make H_2. If nuclear reactors provide the energy for H_2 production and H_2 replaces oil and natural gas for transport fuels, there is no dependence on foreign oil and gas. Directly or indirectly, large national security and economic problems are associated with dependence on foreign oil and natural gas. Similarly, if nuclear energy can be used to make H_2 and H_2 replaces oil and other fossil fuels, carbon dioxide emissions will drop with reduced potential for climatic change. This strategy uses nuclear energy to directly solve these environmental, economic, and national security issues.

These considerations indicate the strategic need for nuclear energy technologies to generate H_2. One approach is described herein: the AHTR coupled to a thermochemical H_2 production cycle. The processes, requirements, and proposed nuclear technology are described.

2. HYDROGEN PRODUCTION

2.1 Compatibility of Nuclear Energy with Hydrogen Production

Each energy technology has a set of characteristics that determine what applications are potentially viable in terms of both technical feasibility and economics. For example, the characteristics of internal combustion engines (small size, high energy output per unit mass, etc.) make them suitable for automobiles. However, the high cost of the fuel makes such engines unsuitable for central production of electricity. The viability of nuclear energy for H_2 production depends upon the match between the intrinsic characteristics of H_2 systems and nuclear energy systems.

Experience has demonstrated that nuclear energy production in small units on a small scale is not economically viable. If nuclear energy is to be used for economic H_2 production, the H_2 demand must match the scale of H_2 production from a nuclear reactor. The newest "world-class" H_2 plants that are under construction have capacities of 200 million standard cubic feet per day—equivalent to a 1,600-MW(th) reactor. The size of H_2 plant, in terms of energy flows, are rapidly approaching the size of large nuclear power plants. Large plants are now on H_2 pipeline systems and the scale of H_2 demand and the scale of nuclear power plants match.

Nuclear power plants are characterized by high capital costs and low operating costs. The economics are strongly dependent upon base-load operations with continuous output. The characteristics of the H_2 system decouple production from consumption. Hydrogen transport is by pipeline, where packing (increasing the pressure) creates significant storage capacity. Hydrogen storage in large volumes, using the techniques developed by the natural-gas pipeline industry, is expected to be relatively low cost.

There are multiple constraints in the siting of a nuclear power plant including seismic activity, availability of cooling water, and low population density. These constraints often result in the collocation of multiple nuclear power plants. Because of these siting restrictions, the ideal product from a nuclear plant should be (1) easy to transport long distances to markets (to minimize siting difficulties), (2) energy intensive and in very high demand (to match the large energy output of multiple nuclear plants), and (3) storable (to allow efficient full utilization of multiple capital-intensive plants). These qualities describe pipeline H_2 (with storage in the pipeline or in separate facilities) and indicate the potential for a good match between nuclear power and H_2 production.

2.2 Generation of Hydrogen from Nuclear Energy

The viability of H_2 production from nuclear power ultimately depends upon the economics, which, in turn, depend upon both the proposed methods of H_2 production and the available reactors. Four methods have been proposed to produce H_2 from nuclear power.

Electrolysis. The electrolysis of water (Ogden 1999) to produce H_2 is an old technology that is used today to produce ultrapure H_2 and to produce H_2 in small quantities at dispersed sites. Electrolysis is not currently competitive for the large-scale production of H_2, except where low-cost electricity is available. The long-term viability of electrolysis for large-scale H_2 production depends upon the evolution of the electric grid, the capital costs of electrolysis (Sheffield June 2000), and other factors. Current capital costs are estimated to be near $600/kW, with future capital costs that may approach $300/kW. Conventional alkaline electrolyzers have efficiencies of 70 to 85%, with proton-exchange-membrane electrolyzers projected to have efficiencies of 80 to 90%. There is a significant tradeoff between capital costs and efficiency. In many industrialized countries, the peak electrical demand is twice the minimum demand. Consequently, low-cost off-peak electricity is available (e.g., in the middle of the night). Electrolysis may be viable provided there is successful development of efficient, low-cost electrolysis systems and associated local H_2 storage systems.

Hot Electrolysis. Electrolysis (Dutta 1990; Quandt 1986) can be operated at high temperatures (700 to 900EC) to replace some of the electrical input with thermal energy. Because heat is cheaper than electricity, the H_2 costs via this production method could ultimately be lower than for traditional electrolysis. However, the technology (Sheffield June 2000) is currently in an early state of development with high capital costs (>$1300/kW). Hot electrolysis requires collocation of H_2 production with the nuclear reactor to provide the heat.

Steam Reforming. Today, H_2 is produced primarily from the steam reforming of natural gas (net reaction: $CH_4 + 2H_2O$ 6 $CO_2 + 4H_2$). Steam reforming is an energy-intensive endothermic process requiring high-temperature heat input. The natural gas (Stoll December 2000) is (1) used as the reduced chemical source of H_2 and (2) burnt to produce heat to drive the process at temperatures of up to 900°C. The amount of natural gas required for steam reforming can be significantly reduced when heat is provided by a nuclear reactor. Japan (OECD 2000) is currently developing the technology to deliver high-temperature heat from a high-temperature reactor to a steam reforming plant. The nuclear power plant provides heat that replaces heat from a gas flame.

Thermochemical Hydrogen Production. Hydrogen can be produced by direct thermochemical processes (Brown July 2000) in which the net reaction is heat plus water yields H_2 and oxygen. These are the leading long-term options for production of H_2 using nuclear energy. For low production costs, however, high temperatures (>750EC) are required to ensure rapid chemical kinetics (i.e., small plant size with low capital costs) and high conversion efficiencies.

Many types of thermochemical processes for H_2 production exist. The sulfuric acid processes (hydrogen sulfide, iodine–sulfur, sulfuric acid–methanol) and the Br-Ca-Fe cycle are currently the leading candidates. In the sulfuric acid processes, the high-temperature, low-pressure endothermic (heat-absorbing) reaction is the thermal decomposition of sulfuric acid to produce oxygen:

$$H_2SO_4 \rightarrow H_2O + SO_2 + 1/2\ O_2.$$

Typically temperatures in the range of 800EC are needed for efficient H_2 production. After oxygen separation, additional chemical reactions are required to produce H_2. The leading candidate for thermochemical H_2 generation is the iodine–sulfur process (Fig. 1), which has two additional chemical reactions:

$$I_2 + SO_2 + 2H_2O \rightarrow 2HI + H_2SO_4 \text{ (low temperature)},$$

and the H_2-producing step

$$2HI \rightarrow H_2 + I_2 \text{ (intermediate temperature)}.$$

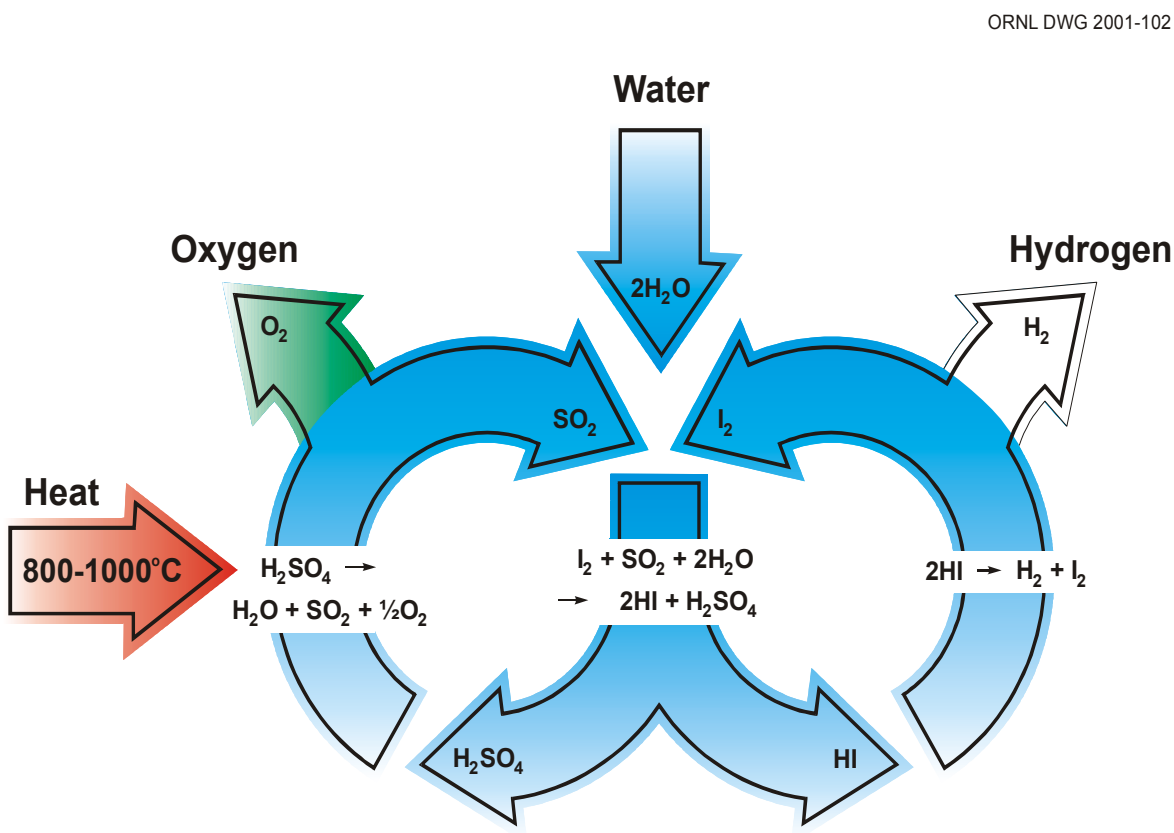

Fig. 1. Iodine–Sulfur Process for Thermochemical Production of H_2.

The Japan Atomic Energy Research Institute (OECD 2000) is currently preparing to demonstrate the production of H_2 by steam reforming of natural gas with the heat-energy input provided by its High-Temperature Engineering Test Reactor (HTTR). The iodine–sulfur process is being developed with the ultimate goal of connecting it to the HTTR. Research on this process is also under way in the United States. Significant development work on H_2 thermochemical cycles is required, with the technology being applicable to both nuclear and solar-power tower heat sources.

The economics of H_2 production strongly depend on the efficiency of the method used. Production efficiency can be defined as the energy content of the resulting H_2 divided by the energy expended to produce the H_2. Hydrogen production by electrolysis (Ogden 1999) is relatively efficient (~80%; but there is a significant tradeoff between capital cost and efficiency). However, when this factor is combined with the electrical conversion efficiency, which ranges from - 34% (in current light-water reactors) to 50% (for advanced systems), the overall efficiency would be - 25 to 40%. A significant capital investment in electrolytic cells is also required. For thermochemical approaches such as the iodine-sulfur process described previously, an overall efficiency of >50% has been projected. Combined-cycle (H_2 and electricity) plants may have efficiencies of ~60%.

The current estimates (OECD 2000) are that thermochemical H_2 production costs could be as low as 60% of those from electrolysis. This reflects the capital and operating cost penalties of converting thermal energy to electricity and then to chemical energy (H_2) versus the cost advantages of converting thermal energy directly to chemical energy.

2.3 Requirements

Based on the above considerations, the future nuclear-hydrogen production plants should have the following characteristics or requirements.

- *Reactor power*. Reactor powers in the range of typical nuclear applications (100 to 1000 MW(e) match well with the scale of H_2 production facilities. Economic considerations for specific applications will determine actual plant size.

- *Peak temperature*. Low-cost methods require high temperatures (750 to 900EC).

- *Temperature range of delivered heat*. All of the endothermic high-temperature chemical reactions are dissociation reactions that operate at nearly a constant temperature. Heat should be delivered over a small temperature range.

- *Pressure*. The chemical reactions go to completion at low pressures. High pressures reverse the desired chemical reactions. The H_2–nuclear interface should be at low pressure to (1) minimize the risk of pressurization of the chemical plant and (2) minimize high-temperature materials strength requirements.

- *Isolation.* The nuclear and chemical facilities should be isolated from each other so that upsets in one facility do not impact the other.

3. THE ADVANCED HIGH-TEMPERATURE REACTOR

The AHTR is a new reactor concept (Forsberg November 2001) to produce high-temperature heat (750 to 1000+EC) for efficient production of thermochemical H_2. The AHTR is based on several technological developments:

- High-temperature, low-pressure molten-salt reactor coolants from the large aircraft nuclear propulsion program of the 1950s and the molten-salt breeder reactor program of the 1960s.
- Coated-particle graphite fuel developed in the 1970s for gas-cooled reactors.
- Passive safety systems for gas-cooled and liquid-metal reactors developed in the 1980s.

3.1 Concept Description

The AHTR reactor core consists of coated-particle graphite-matrix fuel cooled with a molten fluoride salt. The fuel is similar to helium-cooled reactor fuel (Fig. 2). The important characteristic of these fuels is that they can operate at very high temperatures with peak temperatures of - 1200EC. They are the only practical, demonstrated nuclear fuels capable of producing heat at sufficient temperatures for H_2 production.

Molten fluoride salts are the only high-temperature liquids that have been demonstrated to be fully compatible with graphite fuels (Grimes 1970). There is a century of industrial experience with graphite and fluoride salt compatibility—aluminum is electrolytically produced from cryolite ($3NaF\text{-}AlF_3$) in very large graphite baths at ~1000EC. Molten salts are leading candidates for cooling the first wall of fusion reactors (Sagara 2000) and are currently under active experimental study by the DOE Office of Fusion Energy Science. The atmospheric boiling points for molten fluoride salts are near 1400EC. At operating conditions, molten-salt properties are similar to those of water. Molten salts do not react with air or carbon dioxide but will slowly react with water.

The AHTR reactor core physics, general core design, and fuel cycle are similar to those of the proposed General Atomics Gas-Turbine Modular Helium Reactor (GT-MHR). The low-power-density graphite-moderated core also has the long neutron lifetime, slow kinetics, and thermal neutron spectrum characteristic of the proposed GT-MHR. The molten salt (Fig. 3) flows through the reactor core to an external heat exchanger (to provide the interface for the H_2 production system), dumps the heat load, and returns to the reactor core. The molten salt can be circulated by natural or forced circulation.

The Aircraft Reactor Experiment, a 2.5-MW(th) reactor, operated in the 1950s with a NaF/ZrF_4 molten salt, while the Molten Salt Reactor Experiment, an 8-MW(th) reactor, operated in the 1960s with a $^7LiF/BeF_2$ molten salt. In these reactors, the fuel was dissolved in the salt whereas the AHTR uses solid fuel with a clean molten salt. Detailed studies will be required to determine the preferred composition of the fluoride salt. All of the candidate fluoride salts have somewhat similar properties. Preliminary nuclear calculations used Li_2BeF_4 because its properties are well known.

ORNL DWG 2001-45

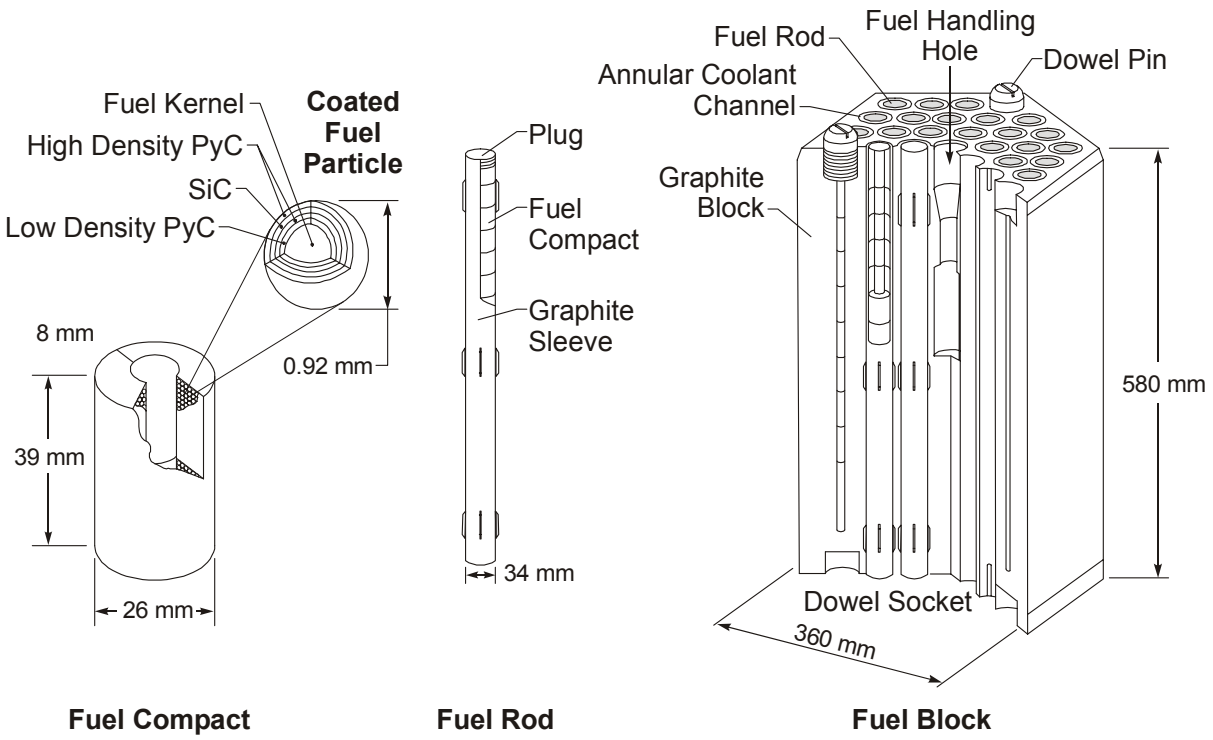

Fig. 2. Coated-Particle Graphite Fuel (High-Temperature Engineering Test Reactor Fuel).

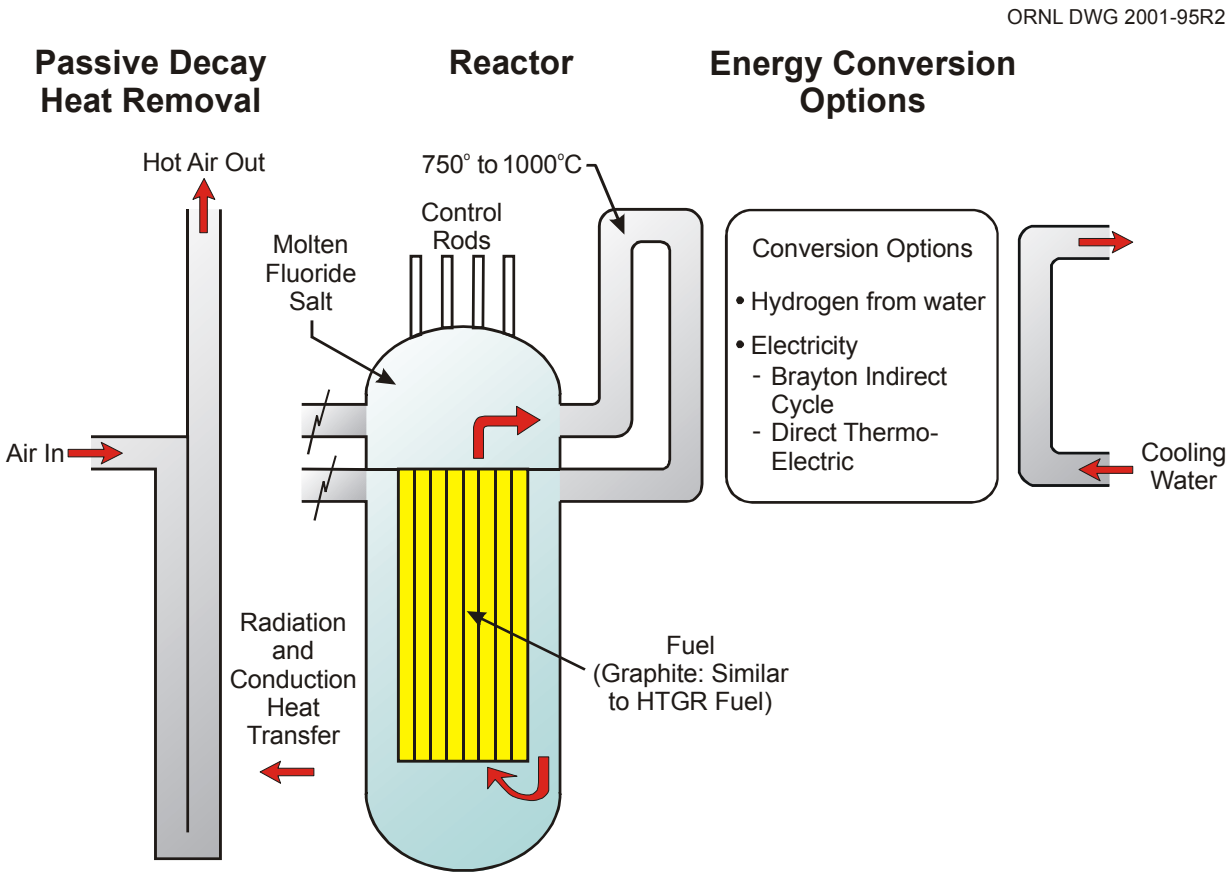

Fig. 3. Advanced High-Temperature Reactor.

The excellent heat transfer properties of molten fluoride salts, compared with those of helium, reduce the temperature drops between (1) the fuel and molten salt and (2) the molten salt and any secondary system. Comparable calculations for a typical prismatic geometry were made of the temperature drop between the centerline prismatic fuel temperatures and coolant for helium and molten-salt coolants. The temperature drops for helium and molten-salt coolants were 415 and 280EC, respectively. The better heat transfer capabilities of molten salts (a liquid) compared with those of helium allow reactor designs with higher coolant exit temperatures and power densities than in gas-cooled systems for the same maximum temperature limit in the fuel.

3.2 Matching Reactor Characteristics to Hydrogen Plant Characteristics

Heat for thermochemical H_2 production should be delivered at high, near-constant temperatures and low pressures to couple to the desired chemical reactions. An important characteristic of the AHTR is the ability to deliver all of its heat at these conditions. Liquid coolants have good heat transfer capabilities and low pumping power costs in comparison with gas coolants. As a direct consequence, liquid-cooled reactors can deliver most of their heat at near-constant temperatures while gas-cooled reactors generally deliver their heat over a wide range of temperatures due to pumping power limitations. Some examples (Table 1, Fig. 4) demonstrate these differences between gas and liquid coolants. The gas-cooled GT-MHR (General Atomics) has a ΔT across the reactor core of 369°C while the Advanced Gas-Cooled Reactor (Hinkley Point B) has a ΔT of 355°C. Liquid-cooled reactors typically have much-lower core-temperature drops. The Point Beach pressurized-water reactor has a ΔT across the reactor core of 20°C, while a liquid-metal fast reactor (Super Phenix) has a ΔT of 150°C. The AHTR, as a liquid-cooled reactor, can deliver its heat with small temperature drops (20 to 100EC) with low pumping power.

Table 1. Temperature Drops for Different Reactor Coolants

System	Delta T Inlet to Outlet (EC)	Inlet T (EC)	Outlet T (EC)	Coolant
GT-MHR	369	491	850	Gas (Helium)
AGR (Hinkely)	355	310	665	Gas (CO_2)
PWR (Point Beach)	20	299	319	Liquid (Water)
LMR (Super Phenix)	150	395	545	Liquid (Sodium)

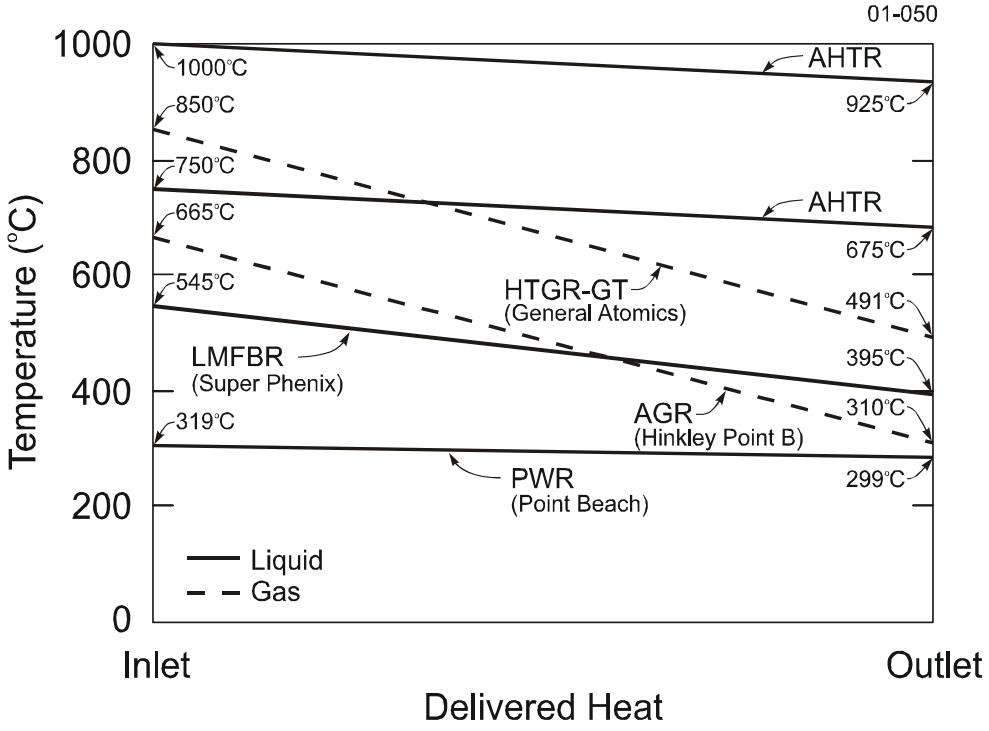

Fig. 4. Temperatures of Delivered Heat from Different Types of Reactors.

The primary difficulty in H_2 production is the need to deliver the heat at temperatures near the limits of the materials of construction. The low-pressure liquid coolant minimizes the maximum temperature required of the reactor coolant and minimizes the stresses on high-temperature components. If gas cooling is used, the maximum temperature in the reactor and coolant would have to be several hundred degrees hotter to ensure that the minimum temperature of the gas would be sufficient for H_2 production. If a high-pressure coolant was used, high stresses would exist in the heat exchangers.

3.3 Interface Considerations

The critical requirement is to deliver the heat from the reactor core to the H_2 thermochemical system with appropriate isolation of nuclear and chemical systems. Three approaches would be used to ensure isolation.

Physical isolation. The nuclear facility will be separated from the chemical plant by some distance. Because a high-heat-capacity low-pressure liquid coolant is used, the AHTR heat losses between the two facilities will be minimal.

Chemical isolation. A variety of fluoride salts can be used with the AHTR. The choice of fluoride salt involves complex neutronic, safety, and economic tradeoffs. The $^{7}LiF\text{-}BeF_2$ salt chosen for the molten-salt-fueled breeder reactor program in the 1960s has the best neutronics. However, this salt is expensive, generates significant tritium, and contains beryllium—with associated handling difficulties. Salts such as the NaF/ZrF_4 salt used in the aircraft nuclear propulsion program have low costs. For H_2 production, a salt with very low production of radioactive tritium would likely be chosen to minimize diffusion of radioactive tritium into the chemical plant. There are several candidate fluoride molten salts.

Heat transfer. A number of options exist for the heat exchanger/chemical reactor. Examples of alternative interfaces include traditional heat exchangers, radiation heat transfer (thermal infrared between tube banks), duplex tubes (tubes constructed of two metals), and intermediate heat exchanger loops. It is not clear what the preferred option is. The very high temperatures does create new options such as the use of a heat exchanger that operates on radiation heat transfer (Fig. 5). Such options provide very high degrees of separation between the nuclear and chemical facilities.

3.4 Safety Systems

The AHTR has the potential to provide a highly robust safety case because of various inherent and passive safety characteristics. Inherent safety characteristics include a low-core-power density, high-heat-capacity core, and high-temperature-margin fuel. Other inherent safety characteristics of the AHTR include atmospheric pressure operation and efficient liquid-coolant heat transfer. Reactor physics for the AHTR are similar to other graphite based, coated-particle fuel systems (GT-MHR) where negative feedback comes from the high-temperature Doppler effect within the fuel.

If a reactor shuts down, radioactive decay heat continues to be generated. The decay heat decreases with time. If a method to remove decay heat is not provided, the reactor core will overheat, with potential damage to the core. Several passive safety options are available to ensure that overheating of the reactor core will not occur. One option is a pool-type reactor with passive safety, similar to the proposed General Electric S-PRISM liquid-metal-cooled reactor (Boardman 2000a, 2000b). The size of that reactor is limited by passive decay-heat cooling to ~1000 MW(th) with a power output of 380 MW(e). In this pool reactor, decay heat is conducted through the reactor vessel wall, transferred across an argon gap by radiation to a guard vessel, conducted through the guard vessel, and removed from the second wall by natural circulation of air. The radiation heat transfer from the reactor vessel to the guard vessel increases by T^4; thus, a small temperature rise in the reactor vessel temperature greatly increases heat transfer out of the system. The argon gap acts as a thermal switch to limit heat losses during normal operation but allows radiation heat transfer to increase heat losses if the reactor overheats.

ORNL DWG 2001-150

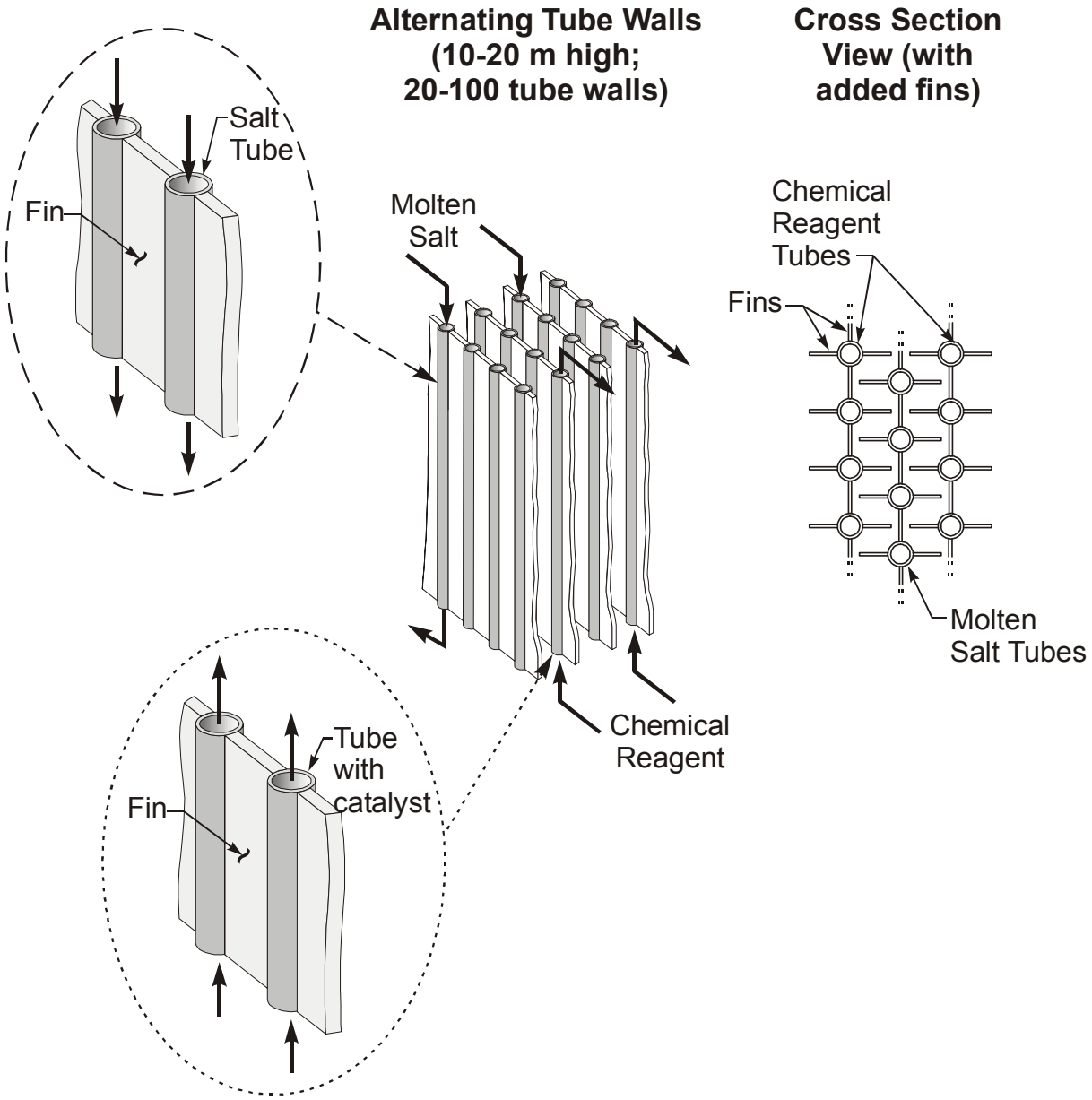

Fig. 5. Radiation Heat Transfer Heat Exchanger.

If the same type of passive cooling system is applied to the AHTR (Fig. 6), the size limits could potentially exceed 2000 MW(th) because of several factors. First, the AHTR has a higher thermal capacity per unit of vessel volume than the S-PRISM. This is due to (1) the substantially larger temperature increase permitted for the AHTR fuel and (2) the relative volumetric heat capacity of graphite (3710 kJ/m^3-EK) and molten salts (Example: Li_2BeF_4: 4680 kJ/m^3-EK) versus sodium (1040 kJ/m^3-EK) and steel (5380 kJ/m^3-EK). The large-heat-capacity core provides added time to allow the decay-heat rate to reach a lower level before the core temperatures peak, thus reducing the capacity requirement for the decay-heat removal system per unit power output. Other molten salts have similar heat capacities. Second, the AHTR operates 200 to 500EC hotter the S-PRISM (500 to 550EC for S-PRISM versus 750 to 1000+EC for the AHTR). Since natural circulation of cooling air increases with temperature and heat transfer across the argon gap varies with T^4, the higher temperatures allow for more efficient removal of decay heat, with heat removal rates adjusted by design of the decay-heat removal system.

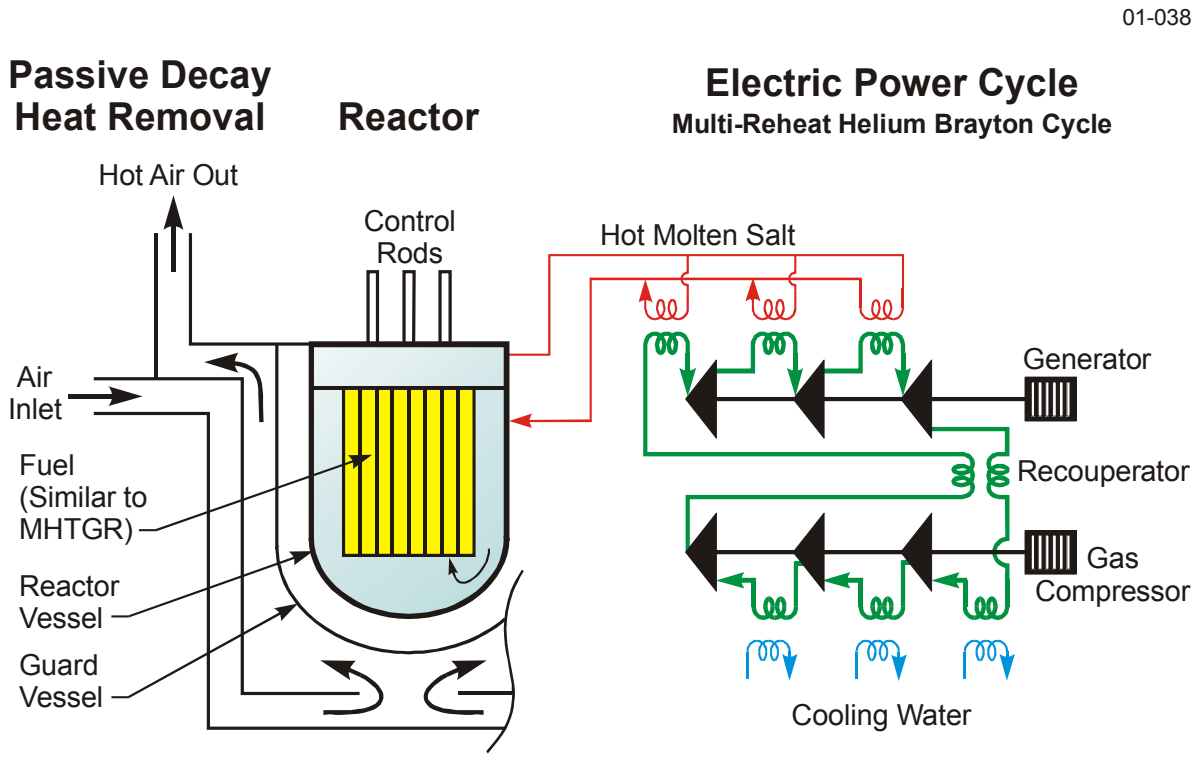

Fig. 6. AHTR Passive Decay-Heat Cooling System And Electric Power Cycle.

4. ELECTRICITY PRODUCTION

The ability to deliver heat at high temperatures for H_2 production implies the ability to efficiently produce electricity. The reference AHTR design for electricity production, with the molten salt delivering all of the heat at high temperatures, employs a recuperated helium Brayton cycle (Fig. 6) with three stages of reheat and three stages of intercooling (El-Wakil 1971). The helium pressure is reduced through three turbines in series with reheating of the helium to its maximum temperature before each turbine. AHTR efficiencies are estimated at 48, 56, and 59%, respectively, for molten salt exit temperatures of 750, 850, and 1000°C. Current materials would allow AHTR operating temperatures of - 750EC. Metallurgical corrosion tests are under way to qualify commercial alloys for operation at 850EC. For much higher temperatures, a major materials development program would be required. Such power cycles are viable only with (1) indirect power cycles to deliver heat before each turbine and (2) liquid-cooled reactors where most of the heat from the reactor can be delivered at high temperatures.

5. CONCLUSIONS

The production of H_2 is difficult because high temperatures are required for efficient thermochemical H_2 production cycles. The high temperatures create significant metallurgical and engineering challenges. Because of these difficulties, it is important to match the reactor to the H_2 production cycle by (1) minimizing the maximum temperature of the coolant needed to deliver the high-temperature heat and (2) minimizing pressure, and thus stress, on high-temperature components. A reactor that can meet requirements for H_2 production can also efficiently produce electricity. The concept of the AHTR was developed to meet these demands and match reactor conditions to chemical plant requirements. Significant R&D is required to develop a commercial system.

REFERENCES

Boardman, C. E., et al., 2000a. "Optimizing the Size of the Super-Prism Reactor," ICONE-8003, *Eighth International Conference on Nuclear Engineering., April 2–6, 2000, Baltimore, Maryland.*

Boardman, C. E., et al., 2000b. "A Description of the S-Prism Plant," ICONE-8168, *Eighth International Conference on Nuclear Engineering, April 2–6, 2000, Baltimore, Maryland.*

Brown, C. L., J. F. Funk, and S. K. Showalter, July 2000. *High Efficiency Generation of Hydrogen Fuels Using Nuclear Power*, GA-A23451, General Atomics Corp. San Diego, California.

Dutta, S., 1990. "Technology Assessment of Advanced Electrolytic Hydrogen Production,: *Int. J. of Hydrogen Energy*, **15** (6), 379-386.

El-Wakil, M. M., 1971. *Nuclear Energy Conversion*, International Textbook Company, San Francisco.

Forsberg, C. W., and K. L. Peddicord, September 2001. "Hydrogen Production as a Major Nuclear Energy Application," *Nucl. News*, **44**(10), 41.

Forsberg, C. W., and P. S. Pickard, November 2001. "Advanced High-Temperature Reactor: Molten Salt Coolant and Graphite Fuel," *Proceedings of the American Nuclear Society Annual Meeting, Reno, Nevada*.

Grimes, W. R., February 1970. "Molten Salt Reactor Chemistry," *Nucl. Appl. Technol.*, **8**, 137–155.

OECD-NEA Nuclear Science Committee, October 2–3, 2000. *First International Exchange Meeting on Nuclear Production of Hydrogen*, Paris, France.

Ogden, J. M., 1999. "Prospects for Building a Hydrogen Energy Infrastructure", *Annu. Rev. Energy Environ.,* (**24**) 227-79.

Quandt, K. H., and R. Streicher, 1986. "Concept and Design of a 3.5 MW Pilot Plant for High Temperature Electrolysis," *Int. J. of Hydrogen Energy*, **11**(5), 309–315.

Sagara, A., et al., 2000. "Design and Development of the FLIBE Blanket for Helical-Type Fusion Reactor FFHR," *Fusion Eng. Des.*, **49–50**, 661–666.

Sheffield, J. et al., June 2000. *A Study of Options for the Development of Large Fusion Power Plants,* JIEE 2000-06, Joint Institute for Energy and Environment, University of Tennessee.

Stoll, R. E., and F. Von Linde, December 2000. "Hydrogen—What Are the Costs?" *Hydrocarbon Process.,* **79**(12), 42-46.