STEADY-STATE AND DYNAMIC PERFORMANCE CHARACTERIZATION TESTING OF A MICROTURBINE

Rick Langley
EPRI PEAC Corp.
Knoxville, TN, USA
rlangley@epri-peac.com

Tom Key
EPRI PEAC Corp.
Knoxville, TN, USA
tkey@epri-peac.com

Tom Rizy
Oak Ridge National Laboratory
Oak Ridge, TN, USA
rizydt@ornl.gov

Abstract

Distributed energy resources (DER), such as microturbines with and without energy storage, are offering industries, commercial businesses as well as homeowners an electric power supply alternative that can be located closer to end-use equipment. DER can provide several advantages over central power generation and equipment acceptability, proven reliability, and higher cost remain as the main drawbacks. However, even if the cost can be reduced there are a number of regulatory and technical barriers that must be overcome before large-scale use of DER can take place. A first step toward addressing these barriers is to start answering the technical questions about DER. This means understanding the DER's capabilities both for the end-user and for the electric utility grid. Results of electrical performance tests of a 30-kW microturbine operated both grid-dependent and grid-independent has been conducted and arepresented and discussed.

Keywords: Distributed Energy Resources (DER), DER Testing, DER Performance, Microturbine, IEEE DER Interconnection Standards.

1. Introduction

The typical DER of less than 100-kVA consists of a prime mover, a power converter, grid interface, and possibly an electric energy storage device. In addition to power generation many of these systems potentially offer increased power reliability and quality. DER electrical operations testing needs to cover all the performance expectations of the end user as well as the anticipated electrical variations that the system will be exposed to while connected to the electric grid.

Performance evaluation of a 30-kW micro-turbine operating in two different modes of operation, grid-connected (interfaced to the utility grid) and grid-independent (standalone) is presented. Interaction of the microturbine with both the utility system and various types/sizes of loads has been characterized as well as the roles of the unit's inverter and storage components. In addition, these tests evaluated the dynamic performance of the unit in transitioning between these two operating modes for various grid events.

The general categories of tests included:

Steady-State Performance – The microturbine's performance (e.g., efficiency, startup, shutdown, dispatch, and operating conditions) over its operating range (25 to 100%, in 25% increments) was measured in both grid-dependent and grid-independent operating modes. In the grid-independent mode, the unit was operated with both linear and non-linear loads. Parameters that were recorded included ambient temperature, barometric pressure, humidity, fuel pressure, flow rate, exhaust gas temperature, and output power. Also the microturbine's output voltage and current waveforms were measured and analyzed for harmonic content.

Dynamic Performance – Inverter-based DER technologies like the 30-kW microturbine have current limitations that may create incompatibilities with certain types of loads. In order to characterize the microturbine's performance capabilities and limitations, its step-load response was evaluated with resistive loads, induction motors, and transformers in the grid-independent mode. In particular, a real concern is the microturbine's capability to start certain sizes of motor loads.

Response to Grid Variations – DER Interconnection requirements/standards are under development by the IEEE'. These tests have started to characterize the microturbine's baseline electrical immunity and performance characteristics relative these draft requirements, when operated grid-dependent. They have characterized the microturbine's ability to synchronize with the utility grid and determined the microturbine's response to variations in grid electrical parameters, such as voltage sags, swells, and capacitor-switching transients. The dynamics and limitations of the microturbine in transitioning from grid-dependent to grid-independent are also described.

2. Microturbine Test System

The microturbine system was installed at EPRI PEAC's Distributed Resource and Power Quality Park (DRPQ Park) in January 200 1. It has been operated regularly for technology demonstrations and laboratory testing ever since it was installed.

Table 1 contains some of the microturbine's specifications. The unit's turbine is directly coupled to a high-frequency permanent-magnet synchronous generator. The high-frequency AC output of the generator is rectified to DC that subsequently supplies a three-phase grid-intertie inverter. The microturbine is capable of operating in grid-dependent and grid-independent modes depending on the user-defined connection configuration and condition of the electric grid supply.

The microturbine has an automatic "mode-transfer" capability, which allows the unit to automatically switch from grid-dependent mode to grid-independent mode and back, based on the health of the electric grid. Several tests evaluated this capability with respect to the unit providing continuous power to end use equipment.

The microturbine does not have discrete generator or feeder protection relay(s), such as those used in more conventional synchronous or induction generator installations. Instead, it relies on its own microprocessor-based protection system that is built into the inverter controls. The system does have one separate and discrete voltage monitor relay which is used to determine the suitability of the grid for connection (nominal voltage level and imbalance). The microturbine's grid-dependent and grid-independent protective functions are user-programmed (undervoltage, overvoltage, over-frequency, and under-frequency).

Table 1. Microturbine System Specifications.

DER Type and Specs	Microturbine Generator
Grid-Dependent Capable	**Yes**
Grid-Independent Capable	**Yes**
Automatic Mode-Transfer	**Yes**
Output kW, kVA – Grid-Dependent	30, 30
Output kW, kVA – Grid-Independent	28, 40 (@ 0.7pf min)
Fuel Type / Fuel Pressure	Low-pressure Natural Gas / 15 psi

The microturbine's built-in and adjustable protection functions for the grid-dependent operating mode were set according to existing IEEE requirements. Table 2 shows a short list of the programming setup.

Table 2. Microturbine Programming Setup and Grid-Dependent Protection Relay Settings.

Microturbine Setup		
Automatic Mode-Transfer	Enabled	
Automatic Restart	Enabled	
Grid-Dependent Protection Relay Settings		
Type	*Setpoint*	*Time-Delay*
Undervoltage Level 1	424.0V (88%)	2.0 sec
Undervoltage Level 2	240.0V (50.0%)	0.010 sec (not changeable)
Overvoltage Level 1	528.0V (110%)	1.0 sec
Overvoltage Level 2	576.0V (120%)	0.010 sec (not changeable)
Under-frequency	59.3Hz	0.010 sec (not changeable)
Over-frequency	60.5Hz	0.010 sec (not changeable)

3. Characterization of Nominal Voltage Tolerance Thresholds

The microturbine was installed in the test setup as shown in Figure 2 and operated in the grid-dependent mode. The objective was to characterize the microturbine's response to changes in steady-state supply voltage levels. Also tested was the unit's response to grid (or referred to as the Local EPS by the IEEE) voltage unbalance.

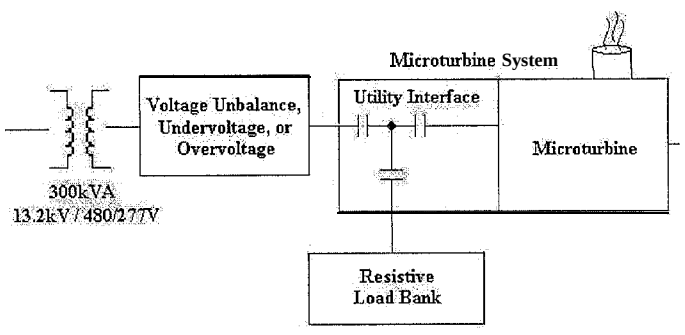

Figure 2. Test Setup – Characterization of the Microturbine's Nominal Voltage Tolerance Thresholds

3.1. Voltage Unbalance Tests

The input voltages to the microturbine and load were adjusted to create voltage unbalance conditions. In this case unbalance is measured line to neutral based on a

standard method'. The degree of voltage unbalance was slowly increased until the microturbine tripped offline.

The trip occurred when the grid voltage unbalance reached approximately 3%. When the unit tripped offline, it automatically reconfigured for grid-independent operation. The three- phase contactor connection between the Local EPS and microturbine system was opened. The unit system began running in standalone mode supporting the load bank -4 minutes after tripping.

Several minutes later, the grid's voltage balance was adjusted back to nominal and the microturbine again tripped offline and automatically reconfigured for grid-dependent operation. The reconfiguration process for connection back on to the grid took -30 minutes.

3.2. Undervoltage Tests

The input voltages to the microturbine and its load were adjusted to create balanced undervoltage conditions. The gird's voltage was slowly decreased until the microturbine tripped offline.

The trip occurred when the grid's voltage reached -90% of nominal. One minute after the microturbine tripped offline, the grid's voltage was returned to nominal onditions. However, the microturbine did not automatically return to grid-connect operation. The unit remained in standby mode. Even though the microturbine did not return to grid-connect mode, the resistive load bank was reconnected to the grid. A user-initiated start command was necessary to restart the microturbine system for grid-dependent operation.

3.3. Overvoltage Tests

The input voltages to the microturbine and its load were adjusted to create balanced overvoltage conditions. The grid's voltage was slowly increased until the microturbine system tripped offline. The overvoltage test results are shown in Figure 3.

The trip occurred when the grid's voltage reached -110% of nominal. The connection between the grid and microturbine opened. Upon tripping offline, the system automatically reconfigured for grid-independent (standalone) operation. It took the unit -4 minutes after tripping offline to begin running in standalone mode supporting its load bank.

Several minutes later, the grid's voltage was adjusted back to nominal. The microturbine again tripped offline and automatically reconfigured for grid-dependent operation. The reconfiguration process for the unit to reconnect to the grid took -25 minutes.

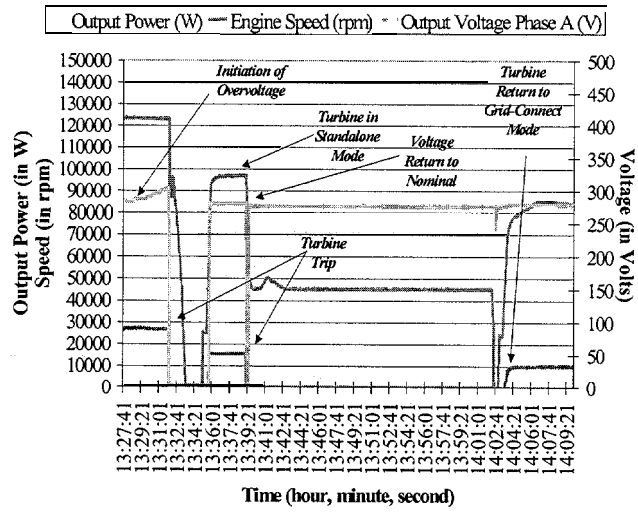

Figure 3. **Overvoltage Test** Results.

3.4. Significance of the Tests

The grid's nominal voltage level and voltage unbalance depends on many factors: local utility standard practices, service contract stipulations, time-of-day, load balance, connection location and nearby load types are just a few. The draft IEEE P1547 standard does not specifically identify these tests. However, these issues are important because they represent the possible variabilities in the grid supply. DER devices should be designed so that they are compatible with the grid's normal disturbances and voltage variability. These tests characterize some of the compatibility issues with one type and brand of DER equipment.

4. Characterization of Response to Voltage Variations

The microturbine was evaluated in the test setup as shown in Figure 4. The objective was to characterize the microturbine's response to voltage sags affecting the grid while operating in grid-dependent mode. Single-phase, two-phase, and three-phase voltage sags of various magnitudes and durations were applied to the microturbine and its load bank. The unit's voltages and current were recorded during each sag test.

4.1. Single Phase Sags

For single-phase voltages sags on Phase A, the microturbine tripped offline when the sag was less than 50% of nominal for 3.5 cycles (or 58.5ms) and 85% of nominal for 120 cycles (2.0 s) as shown in voltage sag tolerance plot of Figure 5. The tests were repeated for single-phase sags on Phase B and C. The results were identical to those observed for Phase A,

1. IEEE or ANSI Method?

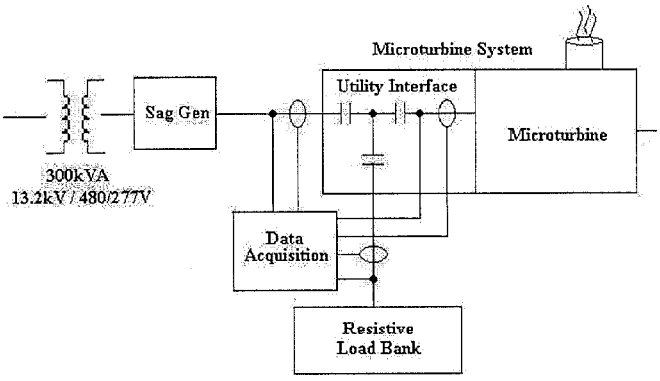

Figure 4. Test Setup – Characterization of Microturbine Response to Grid Voltage Variations.

4.2. Multiple Phase Sags

Two-phase and three-phase sag tests were also performed on the microturbine with very similar results to the single-phase sags. The voltage sag tolerance curves are almost identical for all sag types applied to the system.

Figure 6 shows the results of a three-phase sag applied to the microturbine. The unit trips offline along with its load in -3.5 cycles. The microturbine reconnects the load to the grid -1 cycle after the sag ends. The microturbine went into bypass mode for -5 minutes before automatically reconnecting to the grid in the grid-dependent mode.

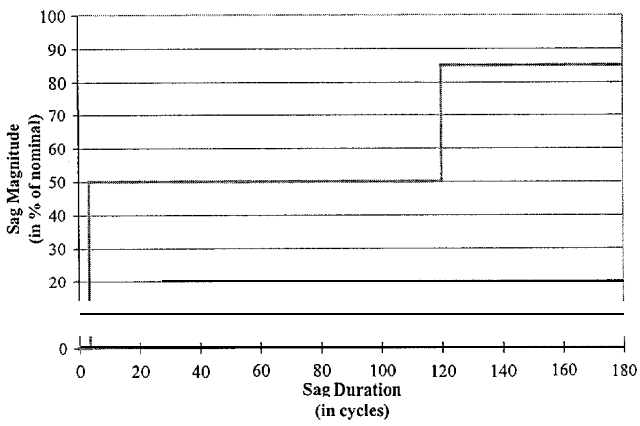

Figure 5. Voltage Sag Tolerance Plot for the Microturbine. [2]

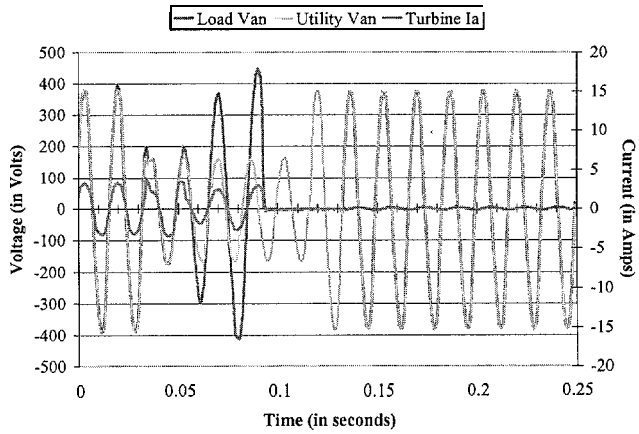

Figure 6. Symmetrical Three-phase Voltage Sag 40% of Nominal for 5 cycles.

4.3. Significance of Tests

According to IEEE P1547, a DER should trip offline if the magnitude of the grid voltage falls below 88% for 2 seconds or 50% for 10 cycles.[3] It also requires that the DER not reconnect until the grid voltage is within Range B of ANSI C84.1. The test results show that the microturbine responded in a manner that was consistent with the programming of the grid-dependent built-in protective functions and the criteria defined by the current draft of P1547.

5. Characterization of Response to Voltage Interruptions

The microturbine was evaluated in the test setup as shown in Figure 7. The objective was to characterize the unit's response to voltage interruptions while operating grid-dependent.

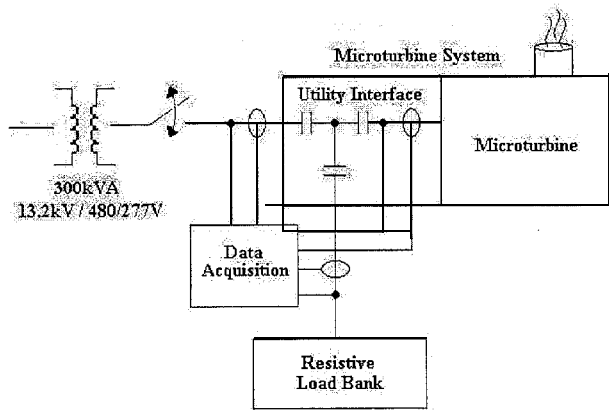

Figure 7. Test Setup – Characterization of Response to Voltage Interruptions.

2. The area on and below the curve represents the region that causes the microturbine system to trip offline.

3. IEEEP1547, Section 4.2.1, Table 1.

5.1. Phase Interruption Tests

Single- and three-phase voltage interruptions were applied to the microturbine. The interruptions were applied at several different durations as well as for different microturbine outputs and loadings. The unit's voltages and currents were monitored during each interruption test. The test results are summarized in Table 3. The load setpoint indicates the power output that the microturbine is set to provide to the load.

Table 3. Voltage Interruption Test Results.

Microturbine Setpoint	Load Setpoint	Interruption Type	Response Time to Trip
30kW	15kW	Single-Phase	42 cycles (0.7 sec)
15kW	15kW	Single-Phase	1440 cycles (24.0 sec)
7.5kW	15kW	Single-Phase	120 cycles (2.0 sec)
15kW	15kW	Three-Phase	1 cycle (0.017 sec)

The single-phase interruption tests revealed significant variability in the unit's response. The detection time was highly dependent on the unit's output and loadings. When the power output settings and loads were identical, the microturbine did not detect and respond consistently to the phase loss. Also, the detection time increased when the unit's output was lower than the load setpoint. However, when the load and the microturbine's power output setting were different, the unit was able to detect the phase loss quickly and consistently. Also, the microturbine was able to detect three-phase interruptions faster than single-phase ones, even during balanced power conditions.

During all interruption tests, the microturbine tripped itself and its load offline. In each case, the microturbine automatically returned to grid-dependent operation within -5 minutes (shutdown process) after the end of the interruption. The load was returned to the grid as soon as the interruption ended and the grid voltage returned to nominal.

5.2. Significance of Tests

Expect the unit to detect an outright interruption of either a single, double, or three-phases supplying the microturbine from the grid. In the case of the three-phase interruption, the unit indeed detects and responds quickly to the interruption by tripping off even when its output is matched with its load. However, in the single-phase interruption (double phases interruptions have not yet been tested) case when the microturbine's output and load are matched, the unit does not detect and respond quickly to the interruption creating a potential safety problem situation. Although in the above tests, the situation only lasted -30 seconds, further tests are needed to determine if the unit can operate longer in such a situation.

6. Characterization of Dynamic Loading Performance in Grid-Independent Mode

The microturbine was evaluated using the test setup shown in Figure 8. The objective was to characterize the microturbine's performance during dynamic loading conditions such as motor starting and resistive step loading. The unit's oltages and currents were recorded during each test.

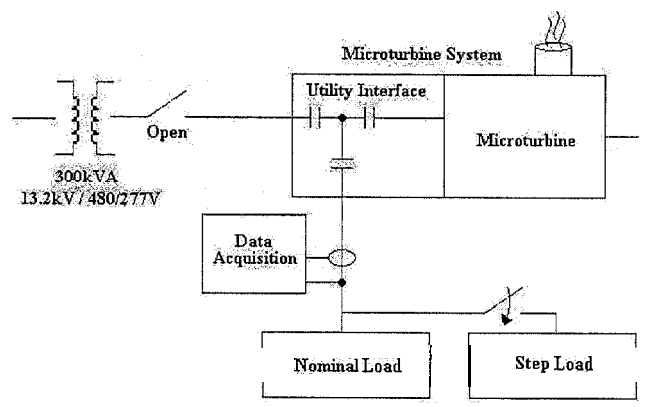

Figure 8. Test Setup – Characterization of Dynamic Loading Performance in Grid-Independent Mode.

6.1. Resistive Step Loading Tests

Several resistive step load tests were performed on the microturbine. The unit's voltages and current were monitored to characterize the effect of large step load changes. The results of a 15 to 30kW resistive step load test are shown in Figure 9 for Phase A. During this test, the system voltage on all phases was greater than 95% of nominal. During a similar test with a 30 to 15kW resistive load step, all phase voltages of the unit were less than 106% of nominal. In both cases, the microturbine's voltage returned to nominal within 30 cycles (0.5 s).

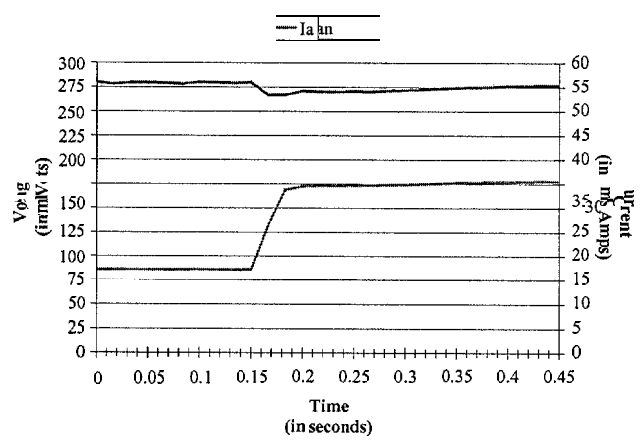

Figure 9. Response to 15 to 30kW Resistive Step Load.

6.2. Motor Starting Tests

Other step load tests included the starting of a 5-hp (3.73 kW) single-phase induction motor. Figure 10 shows the test results. For starting, the induction motor's nameplate indicated 35 to 40kVA. This translates into a 44 to 50 A rms current and a peak current of 60 to 70A (1.4 times for both).

As shown in Figure 10 for Phase A, the current limitations of the microturbine caused significant voltage deviation. As the motor attempts to drawn inrush current during starting, the microturbine's voltage significantly decreases. The Phase A voltage decreased to 28% of nominal while Phases B and C were affected to a lesser degree at 58% and 81% of nominal, respectively. This is a disastrous result and will either result in the failure of the motor or failure of the motor to start. The unit's voltage returned to nominal as soon as the motor accelerated to full speed.

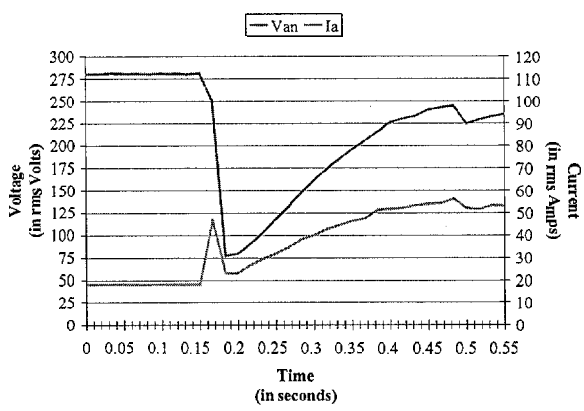

Figure 10. Response to 5-hp Induction Motor Starting With 15-kW Nominal Resistive Load

6.3. Significan ce

The ability to operate DER in grid-independent modes can significantly increase system reliability. When grid power is not available, DER can a be valuable asset to maintaining critical facility loads. However, compatibility between the critical loads and the standby DER can be an issue. Coordination between the DER manufacturer and the facility engineer responsible for backup power is a must. In some cases, alternative-starting methods, such as soft-starters for "line-connected" motors, will be required. Another alternative is the replacement of conventional batteries with ultracapacitors or flywheels to supply the necessary motor inrush.

7. Conclusion

The turbine has operated reliably during many grid voltage disturbance tests and demonstrations. Its built-in protection functions have met most, but not all the response expectations of IEEE P1547 and other requirements being expected by utility companies. The microturbine, the particular DER tested at this time, is best suited for grid-dependent (grid-connected) operation. Transition from grid-dependent to independent mode (off grid operation) is preceded by an interruption of the local loads and the microturbine's response capability is limited during grid-dependent operations. The microturbine as currently configured (may be a control limitation) is not able lo quickly disconnect and start feeding the load when the grid is lost. The microturbine has to go through a complete shutdown operation, which takes several minutes before it can 'he restarted and brought up to speed to begin feeding the isolated load. The performance testing of the microturbine has found that in some cases the unit operates as specified and in some special situations does not. For the phase interruption tests when the microturbine's output is matched with its load, the unit's response is slow (nearly half second vs. milliseconds) to the phase loss. Further tests may be needed to confirm that the microturbine will not continue to operate in this mode for longer periods thus creating a potential safety problem for the end-user and utility personnel. For motor starting, the microturbine is current limited by its inverter-based power conditioning system during grid-independent operation. Thus, the microturbine's has an inability to sustain the voltage supplied to its load within suitable limits during the starting of the 5 hp motor. This will be a problem for other inverter-based DER technologies where the particular size of the motor that results in severe undervoltage is dictated by the size of the microturbine. Further testing of the microturbine is needed in combination with fast-response energy storage as replacement for conventional lead acid batteries currently installed in the microturbine.

Acknowledgements

This research was supported in part by the U.S. Department of Energy, Office of Power Technologies under Contract DE-AC05-00OR22725 with UT-Battelle. The project was conducted as part of EPRI's Distributed Resource (DR) Program "Completing the Circuit" which is also funded by EPRI utility members.

---

1. IEEE P 1547/D08 for Interconnecting Distributed Resources with Electric Power Systems, IEEE Standards Coordinating Committee 21 (IEEE SCC21) on Fuel Cells,

Photovoltaics, Dispersed Generation, and Energy Storage (http://grouper.ieee.org/groups/scc21/1547 .