ornl

ORNL/TM-10218

OAK RIDGE NATIONAL LABORATORY

MARTIN MARIETTA

Characterization of Low-Level Liquid Wastes at the Oak Ridge National Laboratory

F. J. Peretz
B. R. Clark
C. B. Scott
J. B. Berry

OPERATED BY
MARTIN MARIETTA ENERGY SYSTEMS, INC.
FOR THE UNITED STATES
DEPARTMENT OF ENERGY

Printed in the United States of America. Available from
National Technical Information Service
U.S. Department of Commerce
5285 Port Royal Road, Springfield, Virginia 22161
NTIS price codes—Printed Copy: A06 Microfiche A01

This report was prepared as an account of work sponsored by an agency of the United States Government. Neither the United States Government nor any agency thereof, nor any of their employees, makes any warranty, express or implied, or assumes any legal liability or responsibility for the accuracy, completeness, or usefulness of any information, apparatus, product, or process disclosed, or represents that its use would not infringe privately owned rights. Reference herein to any specific commercial product, process, or service by trade name, trademark, manufacturer, or otherwise, does not necessarily constitute or imply its endorsement, recommendation, or favoring by the United States Government or any agency thereof. The views and opinions of authors expressed herein do not necessarily state or reflect those of the United States Government or any agency thereof.

99

ORNL/TM-10218

Characterization of Low-Level Liquid Wastes at the Oak Ridge National Laboratory

F. J. Peretz
B. R. Clark
C. B. Scott
J. B. Berry

LIST OF FIGURES

Figure		Page
1	Location of major LLW facilities at ORNL	3
2	Organization chart of the Waste Management Section of the ORNL Operations Division	8
3	Organization chart of the ORNL Analytical Chemistry Division	9
4	Layout of the Melton Valley Storage Tanks	10
5	Description and nozzle schedule for a typical 50,000-gal storage tank	11
6	Layout of the Evaporator Service Tanks	15
7	Layout of the Gunite Storage Tanks	17
8	Section of a Gunite Storage Tank	18
9	Flowsheet of the PWTP evaporator system	20
10	Locations of LLW collection tanks and major source facilities	22
11	Sources of LLW generated at ORNL in 1985	23
12	Description of a typical LLW collection tank	24
13	Flowsheet of the HFIR primary demineralizer system	25

ORNL/TM-10218

Nuclear and Chemical Waste Programs

CHARACTERIZATION OF LOW-LEVEL LIQUID WASTES AT THE OAK RIDGE NATIONAL LABORATORY

F. J. Peretz C. B. Scott
B. R. Clark J. B. Berry

Date Published - December 1986

Prepared by the
OAK RIDGE NATIONAL LABORATORY
Oak Ridge, Tennessee 37831
operated by
MARTIN MARIETTA ENERGY SYSTEMS, INC.
for the
U.S. DEPARTMENT OF ENERGY
under Contract No. DE-AC05-84OR21400

CONTENTS

	Page
LIST OF FIGURES	v
LIST OF TABLES	vii
ABSTRACT	1
1. INTRODUCTION	1
2. SAMPLE COLLECTION	3
2.1 General Description of LLW System	3
2.2 Personnel	6
2.3 Melton Valley Storage Tanks	7
2.4 Evaporator Service Tanks	14
2.5 Gunite Storage Tanks	16
2.6 PWTP Evaporator Concentrate	19
2.7 LLW Collection System	21
3. ANALYTICAL FACILITIES AND METHODS	26
3.1 Facilities	26
3.2 Methods	27
4. ANALYTICAL RESULTS	33
4.1 Melton Valley Storage Tanks	33
4.2 Evaporator Service Tanks	36
4.3 Gunite Storage Tanks	36
4.4 PWTP Evaporator Concentrate	42
4.5 LLW Collection System	42
5. CONSISTENCY OF DATA	48
5.1 Data on Alpha Emitters	48
5.2 Data on Beta Emitters	48
5.3 Data on Chemical Composition	58
5.4 Other Data	58
6. EVALUATION OF DATA	60
6.1 Overall Trends	60
6.2 TRU Concentrations	60
6.3 Penetrating Radiation	61

6.4 Chemical Composition 64

6.5 RCRA Evaluation 65

6.6 Recommendations for Additional Activities 66

APPENDIX — DATA FROM GUINITE TANK SLUDGE REMOVAL AND NEW HYDROFRACTURE FACILITY OPERATIONS 69

LIST OF TABLES

Table		Page
1	Total volume of LLW concentrate stored in the 50,000-gal tanks as of February 25, 1986	6
2	Descriptions and volume estimates of sludges in the Melton Valley Storage Tanks	13
3	Estimates of the liquid and sludge volumes remaining in the Gunite Storage Tanks	16
4	Analytical methods	29
5	Radiochemical analyses of alpha emitters in the Melton Valley Storage Tanks	34
6	Radiochemical analyses of beta emitters in the Melton Valley Storage Tanks	35
7	Physical properties of samples from the Melton Valley Storage Tanks	37
8	ICP and anion analyses of liquids in the Melton Valley Storage Tanks	38
9	Spark source spectrometry and anion data on samples from the Melton Valley Storage Tanks	39
10	Radiochemical analyses of alpha emitters in the Evaporator Service Tanks	40
11	Radiochemical analyses of beta emitters in the Evaporator Service Tanks	41
12	Physical properties of samples from the Evaporator Service Tanks	42
13	RMAL, ICP, and anion data on feed and concentrate samples from the LLW and PWTP evaporator systems	43
14	RMAL, ICP, and anion data on LLW collection system samples	44
15	Detection limits for organic analyses of LLW collection system samples	45
16	Spark source spectrometry data on the LLW collection system samples	46
17	Comparison of alpha-emitter data from the Melton Valley Storage Tanks	49
18	Comparison of beta-emitter data on the Melton Valley Storage Tanks	50
19	Comparison of normalized beta-emitter data on the Melton Valley Storage Tanks	52

20	Comparison of gamma-emitter data on the Melton Valley Storage Tanks	54
21	Comparison of beta-emitter data on the Evaporator Service Tanks	56
22	Comparison of gamma-emitter data on the Evaporator Service Tanks	57
23	Comparison of ICP and SSMS data on the Melton Valley Storage Tanks	59
24	Analysis of transuranic constituents in the Melton Valley Storage Tanks	62
25	Analysis of transuranic constituents in the Melton Valley Storage Tanks and the Evaporator Service Tanks	63
26	Maximum concentration of contaminants for characteristic of EP toxicity	66
A.1	Tank volumes emptied in the course of injections at the New Hydrofracture Facility	71
A.2	Log of sluicing operations and hydrofracture injections	72
A.3	Radiochemical analyses of LLW tank contents for injection ILW-19	73
A.4	Radiochemical analyses of LLW tank contents for injection SI-1	74
A.5	Radiochemical analyses of LLW tank contents for injection SI-2	75
A.6	Radiochemical analyses of LLW tank contents for injection SI-3	76
A.7	Radiochemical analyses of LLW tank contents for injection SI-4	77
A.8	Radiochemical analyses of LLW tank contents for injection SI-5	78
A.9	Radiochemical analyses of LLW tank contents for injection ILW-20	79
A.10	Radiochemical analyses of LLW tank contents for injection SI-6	80
A.11	Radiochemical analyses of LLW tank contents for injection SI-7	81
A.12	Radiochemical analyses of LLW tank contents for injection SI-8	82
A.13	Radiochemical analyses of LLW tank contents for injection SI-9	83

A.14 Radiochemical analyses of LLW tank contents for injection SI-10 84

A.15 Radiochemical analyses of LLW tank contents for injection ILW-21 85

CHARACTERIZATION OF LOW-LEVEL LIQUID WASTES AT THE OAK RIDGE NATIONAL LABORATORY

F. J. Peretz C. B. Scott
B. R. Clark J. B. Berry

ABSTRACT

This report compiles and evaluates existing data on samples taken from the Oak Ridge National Laboratory Low-Level Liquid Waste (LLW) system. Although the primary focus is on the contents of the eight 50,000-gal Melton Valley Storage Tanks, data on raw LLW from the source facilities, Evaporator Service Tanks, and past operations involving the Gunite Storage Tanks are also included. A brief overview of the ORNL LLW system is provided. Methods of sample collection and analytical procedures are described. Data from each set of samples are reported and evaluated against criteria for classification of wastes. The quality and self-consistency of the data set are also discussed. Issues ranging from classifying as transuranic or Resource Conservation and Recovery Act hazardous waste to providing input for dose-rate calculations and evaluations of chemical compatibility with potential processing options are discussed. Remaining data voids are identified, and activities for filling those voids are recommended.

---

1. INTRODUCTION

This report summarizes efforts to sample and analyze the radionuclide and chemical composition of the liquid and sludge phases present in various components of the Oak Ridge National Laboratory (ORNL) Low-Level Liquid Waste (LLW) system. The primary focus is on the contents of the eight Melton Valley Storage Tanks located near the New Hydrofracture Facility and the service tanks located adjacent to the LLW Evaporator Facility (Bldg. 2531). However, this report also covers data on the sources that feed the evaporator and storage tanks and on the Gunite Storage Tanks that served the function of those tanks before the 1970s.

General data on the chemical and radionuclide concentrations in the wastes are needed to evaluate possible changes in operation of the system and to provide input to design criteria for systems to handle and dispose of concentrates. The latter has become particularly important because

disposal by hydrofracture has recently been halted, pending resolution of regulatory concerns, and the concentrate storage tanks are nearly full. Data on the chemical and physical form of the wastes are needed to evaluate the practicality of various processing options and analyze the resulting waste forms. General data on radiochemical concentrations are needed to predict dose rates and shielding requirements around processing equipment and waste packages and to provide a data base for leach tests and other immobilization requirements.

In addition to the general requirements stated above, two key criteria must be resolved to classify the waste forms. Concentration of transuranic radionuclides above 100 nCi/g result in the waste being classified as TRU, thus directing disposal into a deep geologic site (such as the Waste Isolation Pilot Plant). Several characteristics, including corrosivity and EP toxicity, could result in the wastes being classified as hazardous under the Resource Conservation and Recovery Act (RCRA) and result in additional permitting requirements. The analysis of these data has indicated that the sludge phase present in the Melton Valley Storage Tanks, the Evaporator Service Tanks, and the Gunite Storage Tanks is generally above the 100 nCi/g limit. In addition, recent improvements in the evaporation ratio may result in transuranic concentrations exceeding 100 nCi/g in the liquid phase of future waste concentrates.

Wastes stored in the Melton Valley Storage Tanks appear to be classified as characteristically corrosive under RCRA because of the high pH. Current analytical capabilities prevent a rigorous evaluation of whether concentrations of certain metals exceed the criteria for classification as characteristically toxic as well. To clarify this issue, steps are being taken to refine analytical capabilities both outside and inside ORNL.

This report is a compilation of sampling and analyses initiated by others. In general, these activities focused on one subsystem at a time and often were directed toward resolving one particular question. A review of all data currently available shows that much can be said about the contents and performance of the ORNL LLW system. Recommendations for future characterization activities are given at the end of this report.

2. SAMPLE COLLECTION

2.1 General Description of LLW System

This section first describes the ORNL LLW system as it was designed to operate. Major facilities are shown in Fig. 1. Several recent changes in operation, as well as the impact of cessation of hydrofracture operations, are then discussed.

LLW originates at a wide variety of source facilities, including reactors, radioactive fuel and target processing facilities, decontamination operations, hot cells, and analytical laboratories. The majority of

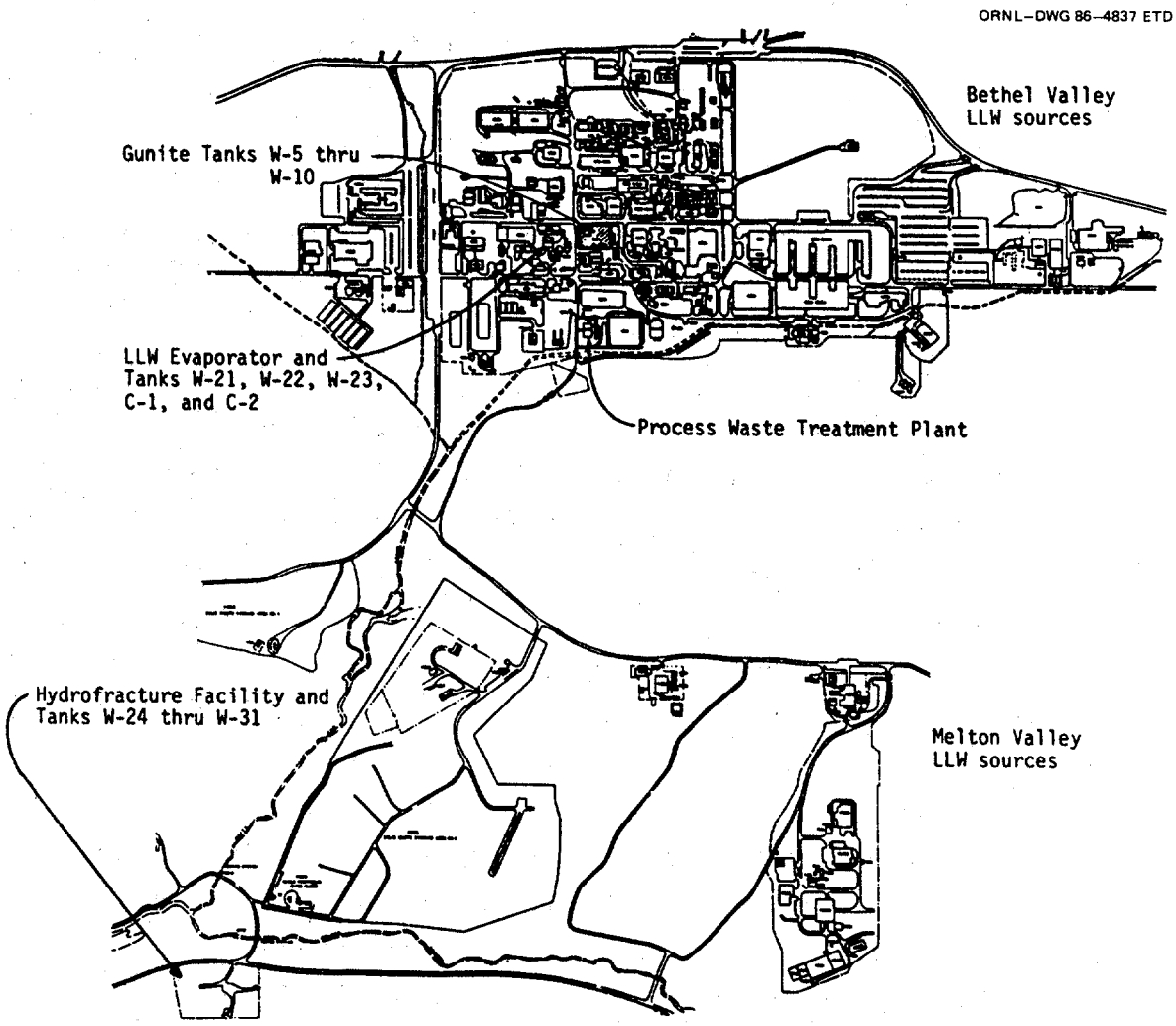

Fig. 1. Location of major LLW facilities at ORNL.

these source facilities are located in the main Bethel Valley complex at ORNL. Several source facilities are located in Melton Valley, including the High-Flux Isotope Reactor (HFIR), the Transuranium (TRU) Facility for processing irradiated transuranic targets, and the Thorium-Uranium Recycle Facility (TURF). Wastes generated at the source facilities are collected and monitored in collection tanks distributed throughout ORNL. Many of the source facilities generate acidic wastes, which are neutralized with sodium hydroxide in the collection tanks.

Wastes gathered in the collection tanks are transferred to the LLW Evaporator feed tanks (W-22 and formerly W-21) via a collection header just south of Central Avenue. Wastes generated in Melton Valley are collected in tank WC-20 and are transferred to the feed tanks by using a transfer line running over Haw Ridge. An additional feed to W-21 and W-22 has been the acid regenerant of the ion exchange columns in the Process Waste Treatment Plant (PWTP). About one-third of this regenerant acid was evaporated for recycle; the bottoms of the PWTP evaporator were sent to the LLW feed tanks. Because of capacity problems and limitations on the amount of acid that could be recycled, two-thirds of the regenerant acid bypassed the PWTP evaporator and was sent directly to the LLW evaporator feed tanks.

Wastes collected in W-21 and W-22 were generally evaporated by a factor of about 8 to 10 and discharged into W-23. The concentrate was then pumped through a dedicated transfer line from W-23 to the eight storage tanks adjacent to the hydrofracture facility. About twice a year, accumulated LLW concentrate was injected into grout sheets about 800 ft below the surface for final disposal.

The six 170,000-gal concrete "Gunite" tanks located near the center of the main ORNL complex had accumulated a large quantity of sludge because of earlier waste operations in which these tanks served as surge tanks for the evaporator and collected radioactive solids that precipitated out of solution upon neutralization. The majority of these sludges have been sluiced out of the tanks, transferred to the Melton Valley Storage Tanks, and injected at the hydrofracture facility.

Recent additional permitting requirements imposed by the State of Tennessee on the hydrofracture facility have resulted in suspension of

operations at that facility after the last sludge and LLW injections in January 1984. Before the permitting issue, operational problems with the hydrofracture well caused suspension of operations for a few months early in the Gunite tank sludge injections. As a result, some of the sludge again settled out in the Melton Valley Storage Tanks. Settling was observed even during normal operations throughout the sludge injections. Heels present in the tanks after the last injection, along with wastes generated since January 1984, have resulted in the Melton Valley tanks becoming essentially full.

Major efforts have been undertaken to reduce the volumes of LLW concentrate that must be stored. A precipitator/clarifier was added to the head end of the PWTP to extend column life and, thus, reduce regeneration waste. Parallel zeolite columns, which are used until the exchange capacity is depleted and are then disposed of as solid waste, have also been tested as an alternative that eliminates the liquid regenerant wastes. These steps have drastically reduced the amount of concentrate produced in the PWTP evaporator. Because it is much less radioactive than the main LLW stream, the PWTP concentrate is now being stored separately in tank W-21. As a result, only tank W-22 is now being used as a feed tank.

Two additional tanks, C-1 and C-2, were installed near the LLW evaporator to collect any high-level waste generated at ORNL. Because no significant quantities of high-level waste were ever generated, these tanks were repiped to collect LLW concentrate. As a result, 11 tanks are currently being used for interim storage of LLW concentrate. These are the eight Melton Valley tanks W-24 through W-31, tank W-23, and tanks C-1 and C-2. Volumes of concentrate present in these tanks as of February 1986 are given in Table 1.

Efforts have also succeeded in reducing the volume of wastes generated at the source facilities. It has been observed that this volume reduction has often not been accompanied by reductions in the total quantity of radioactivity being discharged at the source facilities; thus, recent raw LLW appears "hotter." Removal of the PWTP concentrate from the feed to the LLW evaporators has also drastically reduced the salt content of the feed. Because the evaporators are discharged upon

Table 1. Total volume of LLW concentrate stored in the 50,000-gal tanks as of February 25, 1986

Tank	Volume (gal)
Melton Valley Storage Tanks:	
W-24	43,000
W-25	45,000
W-26	42,000
W-27	43,000
W-28	38,000
W-29	36,000
W-30	42,000
W-31	39,000
Evaporator Service Tanks:	
W-23	42,000
C-1	18,000
C-2	38,000
Total	426,000

reaching a given salt concentration (as measured by the specific gravity), much higher evaporation ratios have recently been observed. Thus, the rate of LLW concentrate generation observed in the spring of 1986 is substantially less than over the past several years. On the other hand, the activity concentrations in the concentrate may be significantly higher.

2.2 Personnel

The samples analyzed and reported in this document were not taken as part of a planned comprehensive characterization of the LLW system. Rather, the samples were collected at different times in efforts to answer specific questions. Thus, procedures and responsible personnel were different for various samplings.

In nearly all cases, the Waste Management Section of the ORNL Operations Division was responsible for actually collecting the samples (Fig. 2). This task was generally accomplished under the supervision of C. B. Scott or S. E. Breeding of the Operating group. Because of the radioactivity of the samples, they were submitted to D. A. Costanzo of the Radioactive Materials Analytical Laboratory (RMAL) (Bldg. 2026). From this laboratory, samples were distributed to other groups in the Analytical Chemistry Division (ACD) as appropriate (Fig. 3). Request numbers were originally assigned to the samples at Bldg. 2026, and in some cases, these numbers were carried onto analyses performed at other locations.

The major laboratory groups involved in the analyses are the RMAL under D. A. Costanzo, the Transuranium Analytical Laboratory under J. L. Botts, the Chemical and Physical Analysis Laboratory under J. H. Stewart, the Mass Spectrometry Laboratory under W. H. Christie, and the Organic Analysis Laboratory under J. E. Caton. General assistance in effectively utilizing the resources of the Division and in cross-checking data output was provided by B. R. Clark. The specific capabilities and involvement of the individual laboratories are described in Chap. 3.

A fairly diverse group was responsible for initiating various sampling activities, as well as for the drafting of this report. General coordination was provided by C. B. Scott of the Operating group and J. B. Berry of the Capital Projects group of the Operations Division. Assistance from outside the Operations and Analytical Chemistry Divisions was provided by F. J. Peretz (Engineering), and O. L. Culberson and I. Osborne-Lee (Chemical Technology).

2.3 Melton Valley Storage Tanks

The eight Melton Valley Storage Tanks (W-24 through W-31) are located in an underground concrete vault (Bldg. 7830) (Fig. 4). These tanks (a typical one is shown in Fig. 5) were intended to hold LLW concentrate collected between hydrofracture injections and then to serve as feed tanks to that facility. Upon the recent cessation of hydrofracture

ORNL–DWG 86–4838 ETD

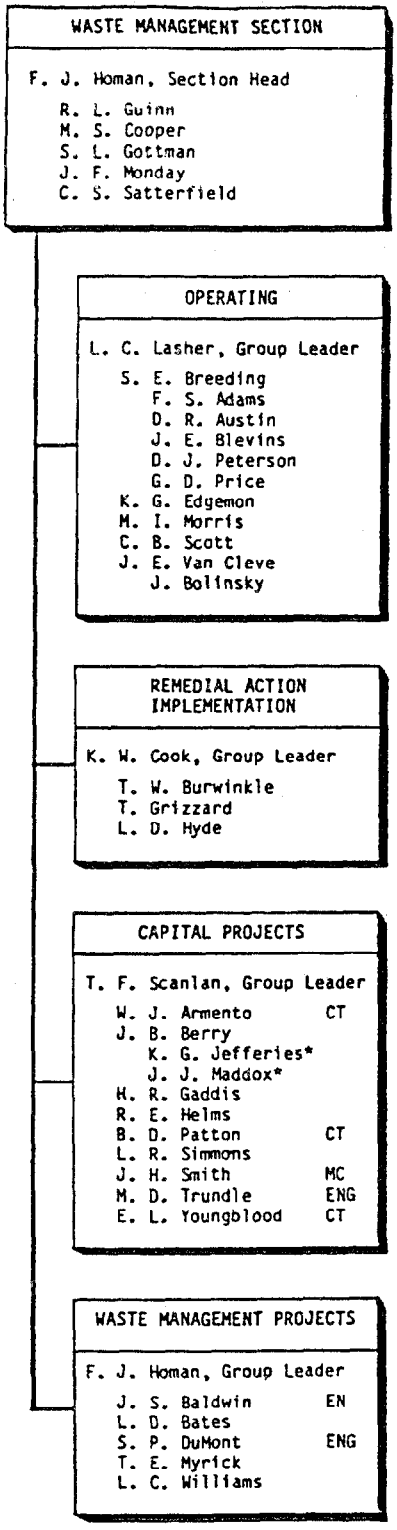

*Co-op Students.

EN - Energy Division
ET - Engineering Technology Division
CT - Chemical Technology Division
MC - Metals and Ceramics Division
ENG - ORNL Engineering

Fig. 2. Organization chart for the Waste Management Section of the ORNL Operations Division.

ORNL–DWG 86–4839 ETD

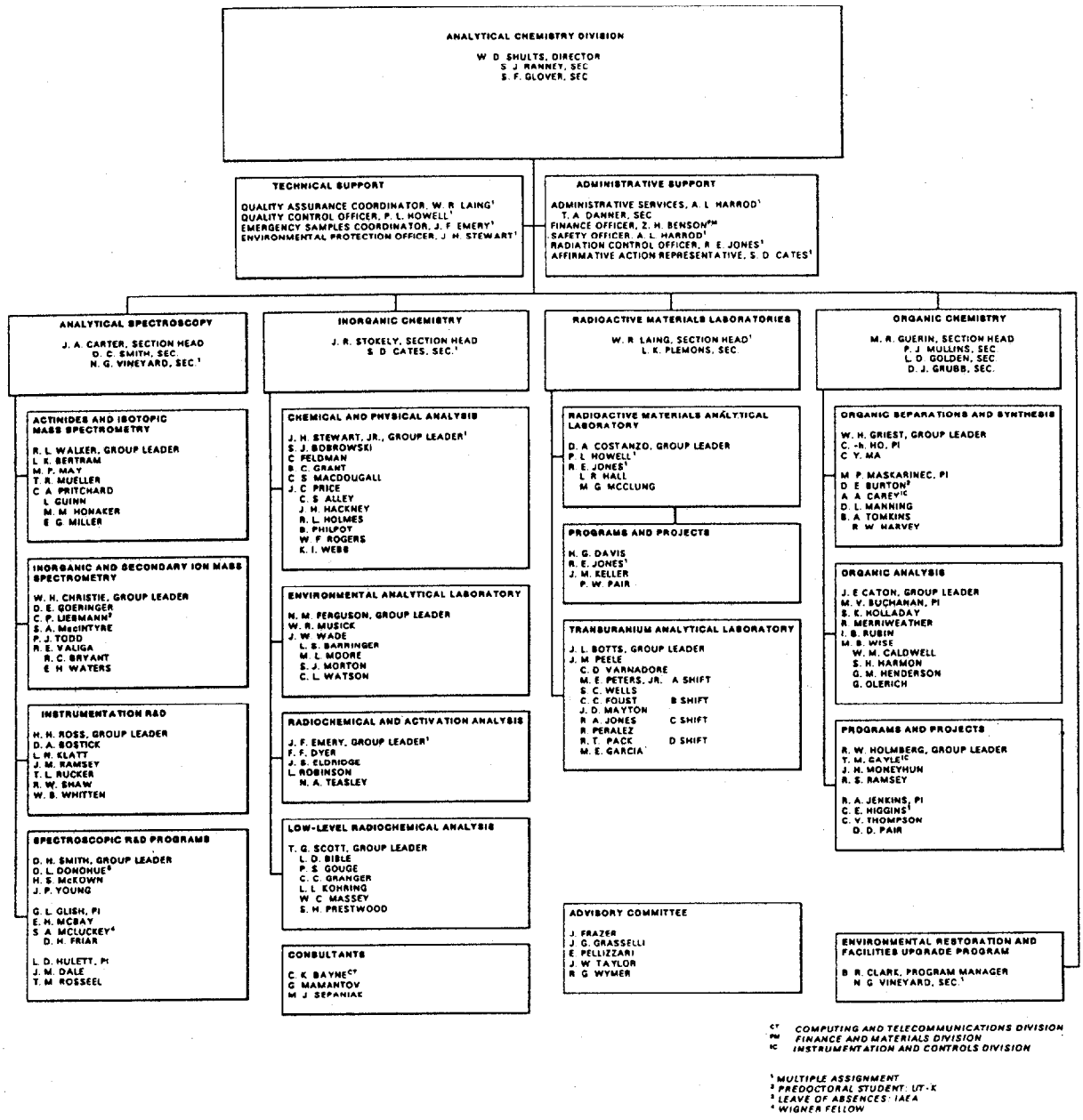

Fig. 3. Organization chart of the ORNL Analytical Chemistry Division (as of December 31, 1985).

ORNL-DWG 86-4840 ETD

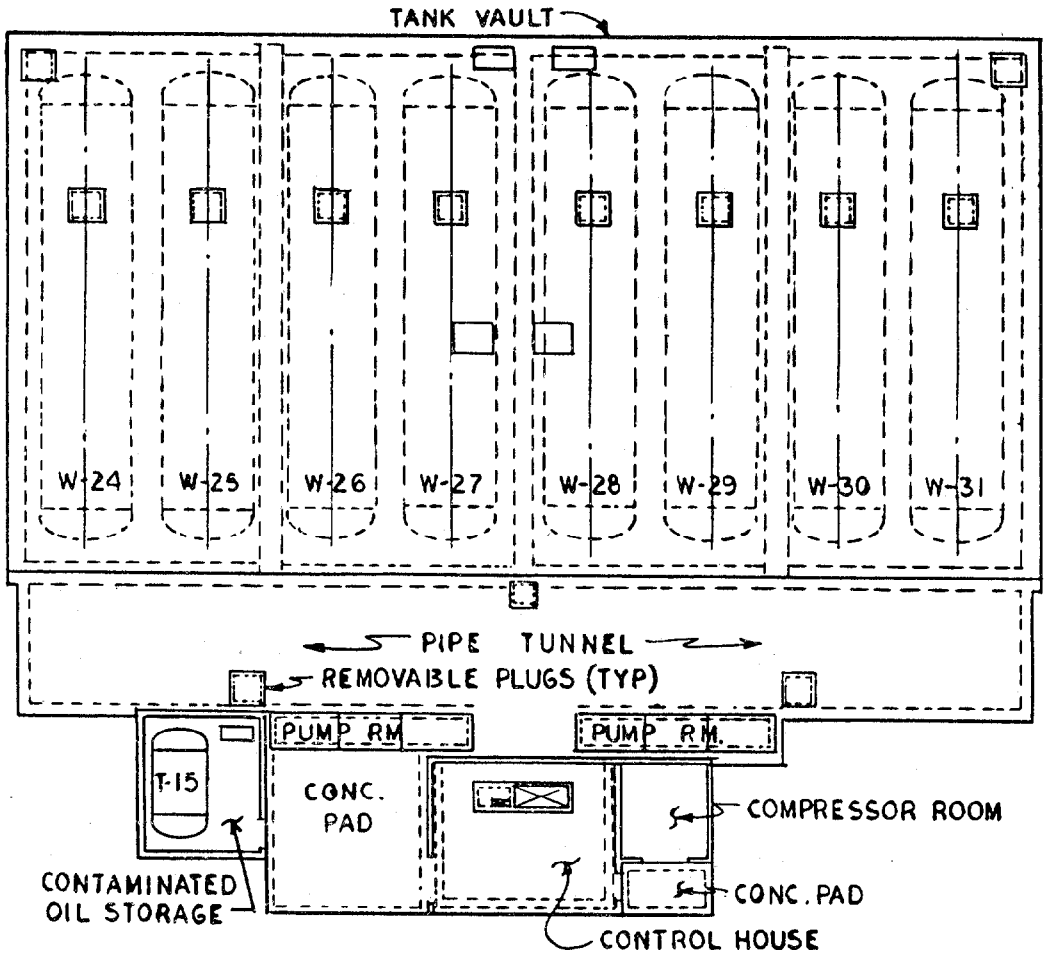

Fig. 4. Layout of the Melton Valley Storage Tanks.

operations, they have become a terminal storage point until either hydrofracture operations resume or an alternate disposal technology is placed in operation.

Data on the contents of the Melton Valley Storage Tanks were generated from two sampling campaigns in July and November 1985. During the July sampling, liquid samples were taken through the plummet level device penetration (G-1 in Fig. 5) in five of the 50,000-gal tanks. Samples were collected by removing the plummet device from above the shield roof

ORNL–DWG 86–4841 ETD

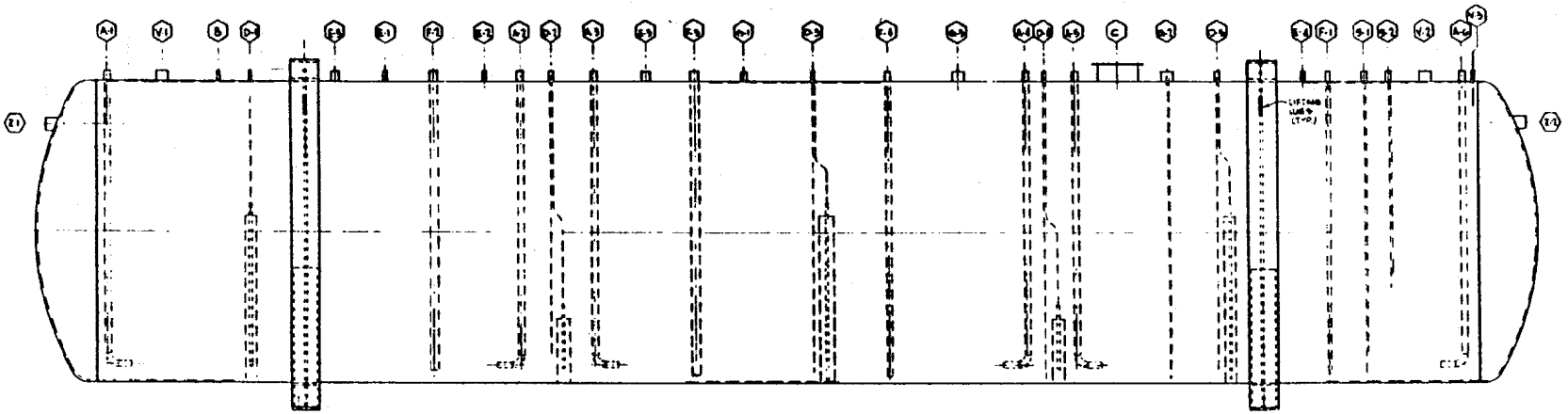

Nozzle Schedule:

ID	Size	Usage	ID	Size	Usage
A-1	3" Sch. 40	Sludge jet	F-1	6" Sch. 40	Pump suction
A-2	3" Sch. 40	Sludge jet	F-2	6" Sch. 40	Spare
A-3	3" Sch. 40	Sludge jet	F-3	4" Sch. 40	Spare
A-4	3" Sch. 40	Sludge jet	F-4	4" Sch. 40	Sludge suction spare
A-5	3" Sch. 40	Sludge jet	G-1	2" Sch. 40	Plummet level device
A-6	3" Sch. 40	Sludge jet	G-2	6" Sch. 40	Density and level probe
B	2" Sch. 40	Chemical addition	G-3	6" Sch. 40	Sludge level detector
C		Flanged manhole	S-1	4" Sch. 40	Low point sample suction
D-1	2" Sch. 40	Tall air sparger	S-2	4" Sch. 40	25% full sample suction
D-2	2" Sch. 40	Short air sparger & temp. sensor well	V-1	6" Sch. 40	Vent inlet
D-3	2" Sch. 40	Short air sparger & temp. sensor well	V-2	6" Sch. 40	Vent outlet
D-4	2" Sch. 40	Short air sparger & temp. sensor well	V-3	1" Sch. 40	Demister drain
D-5	2" Sch. 40	Tall air sparger & temp. sensor well	Z-1	6" Sch. 40	Overflow (W-25 and W-30 only)
E-1	2" Sch. 40	Sample return	Z-2	6" Sch. 40	Overflow
E-2	2" Sch. 40	Spare			
E-3	4" Sch. 40	Spare			
E-4	2" Sch. 40	Sump discharge (pump room)			
E-5	4" Sch. 40	Pump discharge			

Nozzle configuration shown for W-25, W-27, W-28 and W-31.

Nozzles E-5 and F-1 reversed on W-24, W-26, W-29 and W-31.

Fig. 5. Description and nozzle schedule for a typical 50,000-gal storage tank.

and inserting through the open nozzle a hose from the suction side of a sampling pump into the tanks. Samples were drawn from near the top, the middle, and the bottom of the liquid layer in each tank. A sample of liquid was also taken from the sludge region at the bottom of each tank. The solids that were drawn up with the liquid became part of the sample. Samples were taken from tanks W-24 through W-28; tanks W-29 through W-31 were not sampled in July. At the time of the sampling, the contents of the tanks were being both aerated and externally circulated to mix the contents and minimize settling of hard deposits. This procedure had been standard practice since Gunite tank sludge was first introduced into the Melton Valley tanks to aid in completely emptying the tanks during hydrofracture injections. Samples were turned over to D. A. Costanzo of RMAL for distribution to the appropriate analytical laboratories.

The second sampling was conducted on November 6, 1985. All eight tanks were sampled through the same nozzle, and a liquid sample and a solids sample were taken from each tank. The liquid sample was collected using a stainless steel sample container with a remotely operated cork. The sampler was suspended into the middle of the liquid phase and allowed to fill by removing the cork. The sampler was then drawn up out of the tank slowly to minimize the potential for mixing tank and sample contents while being withdrawn. Solid samples were taken by pushing a hollow rod into the sludge phase until the bottom of the tank was reached. Cores of sludge were then removed from the rod. Because the sludge in W-31 was particularly hard, extra force was required to reach the tank bottom (although it was felt that the bottom was eventually reached). The external circulation of the tanks was stopped to allow the liquid and sludge phases to more fully separate for the November sampling. Aeration was maintained, however, to maintain mixing in the liquid phase. Samples were again turned over to D. A. Costanzo of RMAL for distribution.

Physical observations were recorded during the second sampling and are listed in Table 2. Concerns focused on the quantity and physical characteristics of the sludge layer. An estimate of the depth of sludge present in each tank was made by noting at what point the sampling rod seemed to encounter the sludge phase. The depth estimates obtained in

Table 2. Descriptions and volume estimates of sludges in the Melton Valley Storage Tanks

Tank	Sludge description[a]	Radiation level	Estimated volume (gal)
W-24	Approximately 1.5 ft of a soft, fluid sludge	200 mR/h at 6 in.	3,600
W-25	About 4 ft of sludge similar to that in W-24 but containing noticeable amounts of sand (possibly from hydrofracture slotting); higher radiation levels than W-24	About 1 R/h at 1 ft	14,600
W-26	About 2.5 ft of soft sludge containing more sand than found in W-25; radiation levels similar to W-24	(200 mR/h at 6 in.)	7,500
W-27	A hard, crusty layer about 3 in. thick was found 2.5 ft from the bottom of the tank; sludge under the crust was similar to that in W-24; a somewhat thicker consistency may have been due to the crust breaking off into the sample	not reported	7,500
W-28	About 8 in. of sludge similar to that found in W-24	not reported	1,100
W-29	About 1.5 ft of soft sludge a little thicker than in W-24 but with similar radiation levels	(200 mR/h at 6 in.)	3,600
W-30	(same as W-29)	(200 mR/h at 6 in.)	3,600
W-31	About 3 ft of extremely thick sludge; the sampler rod had to be hammered through the sludge to reach the tank bottom; the sludge was not at all fluid and was much "hotter" than the other tanks	4 R/h at 4 in.	9,800

[a]It is generally believed that there is more sludge on the discharge side of the tanks than on the suction side, relative to the depth at the center. The tank contents were not circulated during sampling, but the aerators were left on. A liquid sample was not taken from W-31 because the contents consisted mainly of sludge.

this manner were rough (±6 in.) and led to approximate estimates (Table 2) of the volume of sludge present in each tank.

2.4 Evaporator Service Tanks

Five 50,000-gal tanks are located near the LLW Evaporator (Bldg. 2531) near the center of the main Bethel Valley complex (Fig. 6). Two of these, W-21 and W-22, are designed to serve as evaporator feed tanks. One, W-23, is designed for use as a concentrate collection tank (used to collect concentrate discharged from the evaporator and hold it until a transfer to the Melton Valley tanks is made). Two tanks, C-1 and C-2, were originally designed to serve as high-level liquid waste collection tanks. These differ from the other 50,000-gal tanks primarily in the provisions for the cooling of liquids with high specific heat generation rates. They are also older than the other 50,000-gal tanks and have a somewhat different nozzle layout.

Because of the general lack of storage space in the Melton Valley tanks, the evaporator service tanks have been used for the storage of concentrate, as well as for the uses originally intended. The first tanks converted for concentrate storage were C-1 and C-2, which were never significantly used for high-level waste collection. W-23, which was always fed concentrate, is now being used as much for long-term storage as for a transfer point. Because of the desire to segregate the concentrate from the PWTP evaporator from the LLW evaporator concentrate, W-21 has been used to collect that concentrate. Only W-22 remains dedicated to use as a raw LLW collection and feed tank.

Tanks W-21 through W-23 were sampled in November 1985 after the second sampling at the Melton Valley tanks. Using procedures similar to those used at the Melton Valley tanks, sludge samples were taken from all three, and a liquid sample was taken from W-23. Cores were taken from the sludge near the tank centers, and a bottle was suspended into W-23 for the liquid sample.

No convenient access point exists on tanks C-1 and C-2; therefore, these tanks have not been sampled.

ORNL–DWG 86–4842 ETD

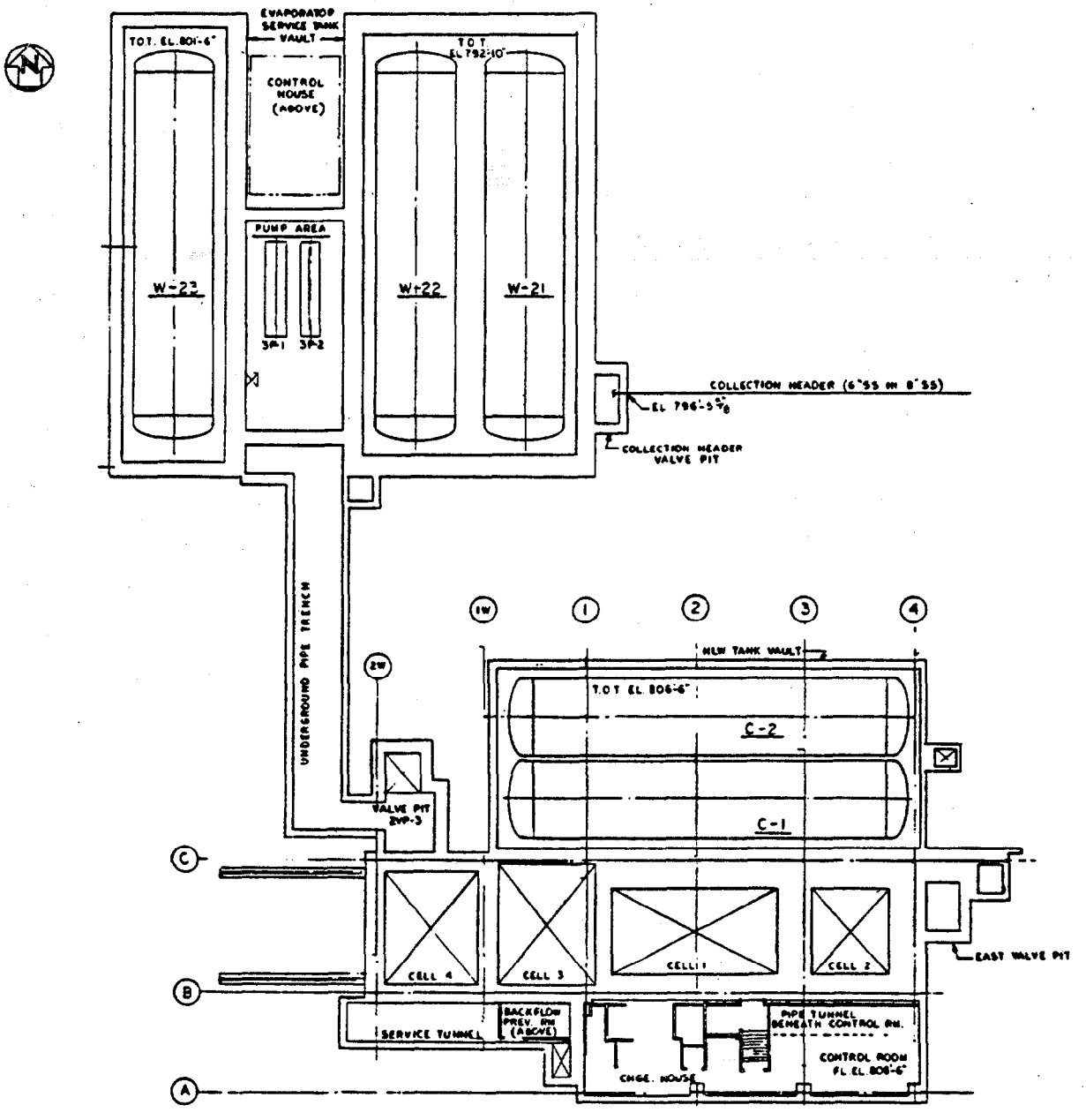

Fig. 6. Layout of the Evaporator Service Tanks.

2.5 Gunite Storage Tanks

The six 170,000-gal Gunite Storage Tanks W-5 through W-10 are located in the South Tank Farm (Fig. 7). A typical cross section of these tanks is shown in Fig. 8. Before the installation of the Evaporator Service Tanks and the Melton Valley Storage Tanks, the six Gunite tanks served all of the functions of LLW collection and concentrate storage. They were also used for phase separations throughout the early years of ORNL because most of the radionuclides were allowed to precipitate and settle in the tanks upon neutralization with caustic and the somewhat less radioactive decant was disposed of by a variety of means. As a result, most of the tanks eventually became filled with radioactive sludge. Between 1982 and 1984 this sludge was suspended and sent to the Melton Valley Storage Tanks for hydrofracturing. The majority of this suspended sludge was pumped down the hydrofracture well, but heels of settled sludge remain in the Melton Valley tanks. The Gunite tanks are now out of service, although a small amount of liquid occasionally flows through W-10 to reach other portions of the LLW collection system. All of the tanks contain residual sludge that could not readily be removed by sluicing. In addition, W-10 contains a significant quantity of liquid. Estimates of the total volume of liquid and sludge in these tanks are given in Table 3.

Table 3. Estimates of the liquid and sludge volumes remaining in the Gunite Storage Tanks

Tank	Total volume of liquid and sludge (gal)
W-5	6,000
W-6	15,000
W-7	(minimal)
W-8	1,000
W-9	3,000
W-10	40,000

ORNL–DWG 86–4843 ETD

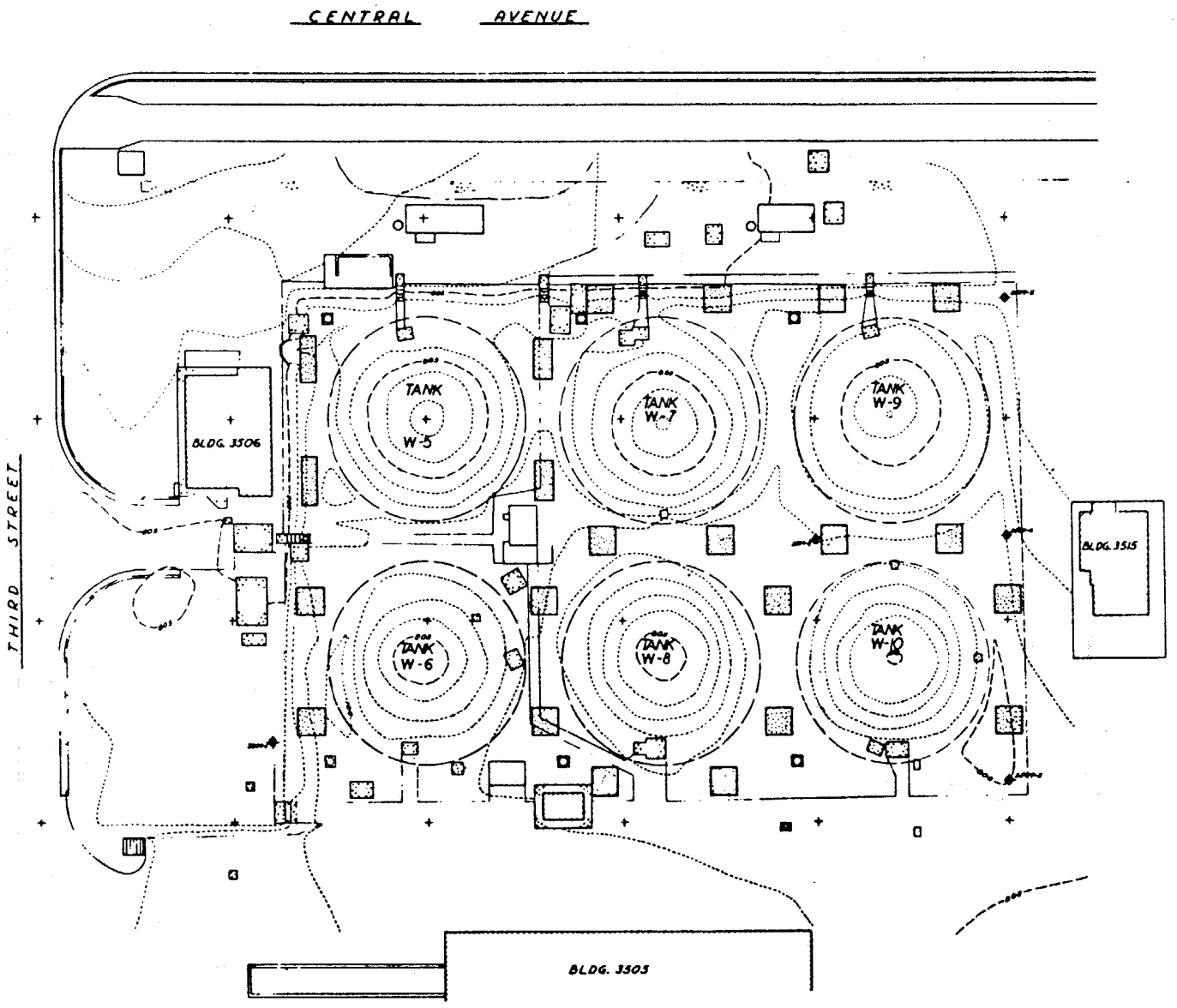

Fig. 7. Layout of the Gunite Storage Tanks.

ORNL-DWG 86-4844 ETD

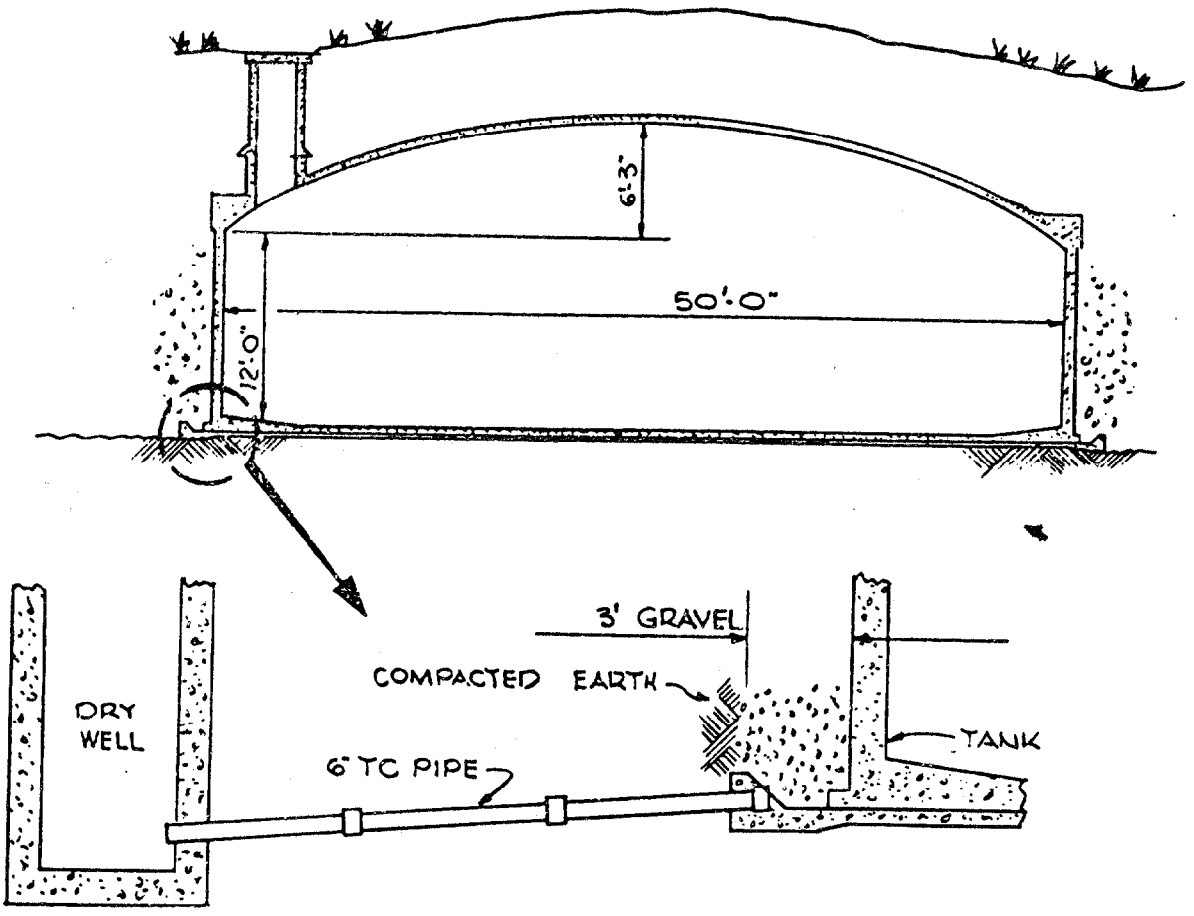

Fig. 8. Section of a Gunite Storage Tank.

Sampling of the Gunite tanks was always difficult because only one penetration was available and the solids were stratified into different layers, characteristic of wastes generated by ORNL in different years. Some of the best data available on the sludge removed from the Gunite tanks appear in the operations reports documenting sampling and other activities conducted during each sludge campaign. A summary of the sludge removal and injection activities is given in Appendix A. Samples taken from the Melton Valley tanks before each injection are also given. These data not only describe the sludge removed from the Gunite tanks but also provide some description of the residual sludge heels forming part of the current inventory of the Melton Valley Tanks.

Data in Appendix A are probably poorly representative of the residual contents now present in the Gunite tanks. This residual material, which includes minor heels of suspended sludge that could not be pumped out, was found to be too hard to be sluiced and removed. Hard residual sludge is probably highly inhomogeneous. One of the more intriguing observations of this residual material is the presence of well-shaped octahedral crystals, as large as 6 in. on a side. Some of these crystals were removed and found to be formed primarily of sodium phosphate.

Any definitive characterization of this residual material would be extremely difficult.

2.6 PWTP Evaporator Concentrate

PWTP is another major contributor to the LLW system. Discharges resulting from regeneration of ion exchange columns include both bottoms from an acid evaporator and regenerant and rinse solutions that have bypassed the PWTP evaporator because of capacity limitations or because no use could be made of the recovered acid. Traditionally, the output of the PWTP was all sent to the LLW waste evaporator feed tanks (W-21 or W-22) and mixed with the other LLW streams before evaporation. Recent changes in the operation of the PWTP, including installation of the precipitator/clarifier and test programs using parallel zeolite columns, have eliminated the capacity restrictions and, thus, reduced the amount of regenerant solution bypassing the PWTP evaporator. As most of the waste now generated at the PWTP is a salt solution evaporated to the greatest extent practical, a procedural change was made to handle the bottoms from the PWTP evaporator as concentrate rather than as evaporator feed. Because the radionuclide activity, including the transuranic activity, is far lower than in the main LLW concentrate stream, it has also been deemed appropriate to segregate the PWTP concentrate from the general LLW concentrate. These changes have only recently been implemented, however, and the existing contents of the Melton Valley Storage Tanks include a significant volume from the PWTP.

The flowsheet for evaporation of regenerant acid is shown in Fig. 9. The concentrate from the PWTP evaporator was sampled in September 1985.

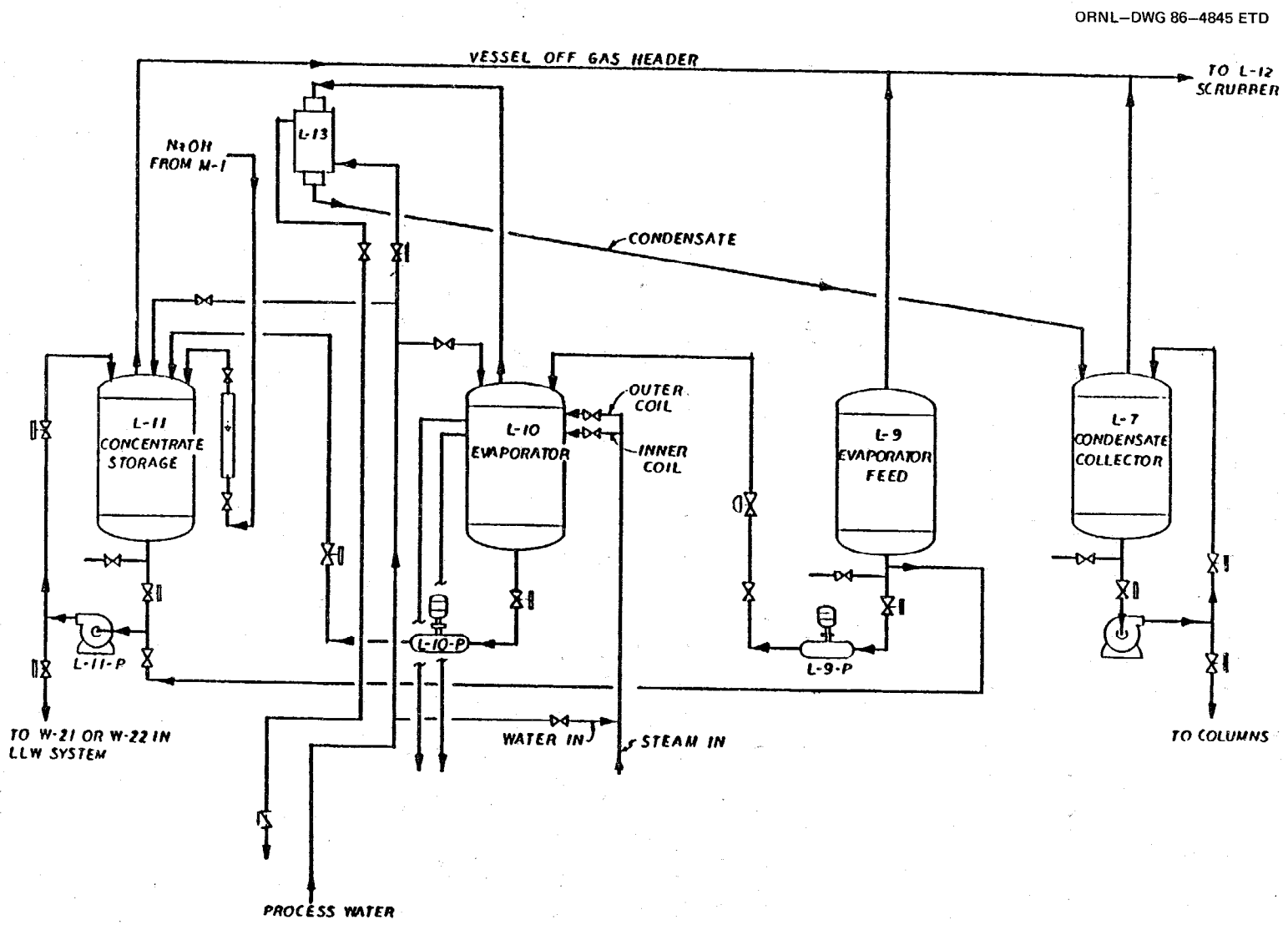

Fig. 9. Flowsheet of the PWTP evaporator system.

These samples were drawn directly from the concentrate receiving tank (L-11) before neutralization and are, thus, highly acidic. Current practice is to neutralize this stream with sodium hydroxide during the transfer of concentrate to the LLW system. Other samples were taken under the direction of O. L. Culberson in July 1985 from both the concentrate tank and a bypass stream (directly from the evaporator feed tank, L-9).

2.7 LLW Collection System

The main source of raw LLW feed to the LLW Evaporator is the liquid from the LLW collection tanks distributed around ORNL. Major source facilities and collection tanks are shown in Fig. 10. The volume distribution of raw LLW received from the LLW collection system and the PWTP in 1985 is shown in Fig. 11. With the recent changes in the PWTP, along with the parallel zeolite columns, the PWTP contribution has fallen to an insignificant contribution in 1986.

Sampling of some of these tanks was initiated by J. B. Berry to characterize the input to the LLW evaporator, and ultimately to the concentrate tanks. Although these data will reflect composition and generation rates that have been recently altered by extensive volume reduction efforts, they should provide a general description of the sources of activity presently stored in the Melton Valley tanks. The greatest significance of these data is for projections of future accumulations of LLW concentrate and the disposal of that future inventory.

Characterization efforts for the LLW collection system are based both on surveys of operators at the source facilities and sampling at key locations in the collection system. A draft sampling plan, calling for periodic sampling at these locations until sufficient data were available to statistically bound the analytical results at each location, was drawn up. So far, however, only one sample has been taken at each location. Sampling locations include collection tanks WC-10, WC-13, and WC-14; waste holding tanks at Bldg. 2026 (High Radiation Level Analytical Laboratory); Bldg. 3019 (Radiochemical Pilot Plant); Bldg. 7920 (Transuranium Processing Plant); and the primary and pool demineralizers at the

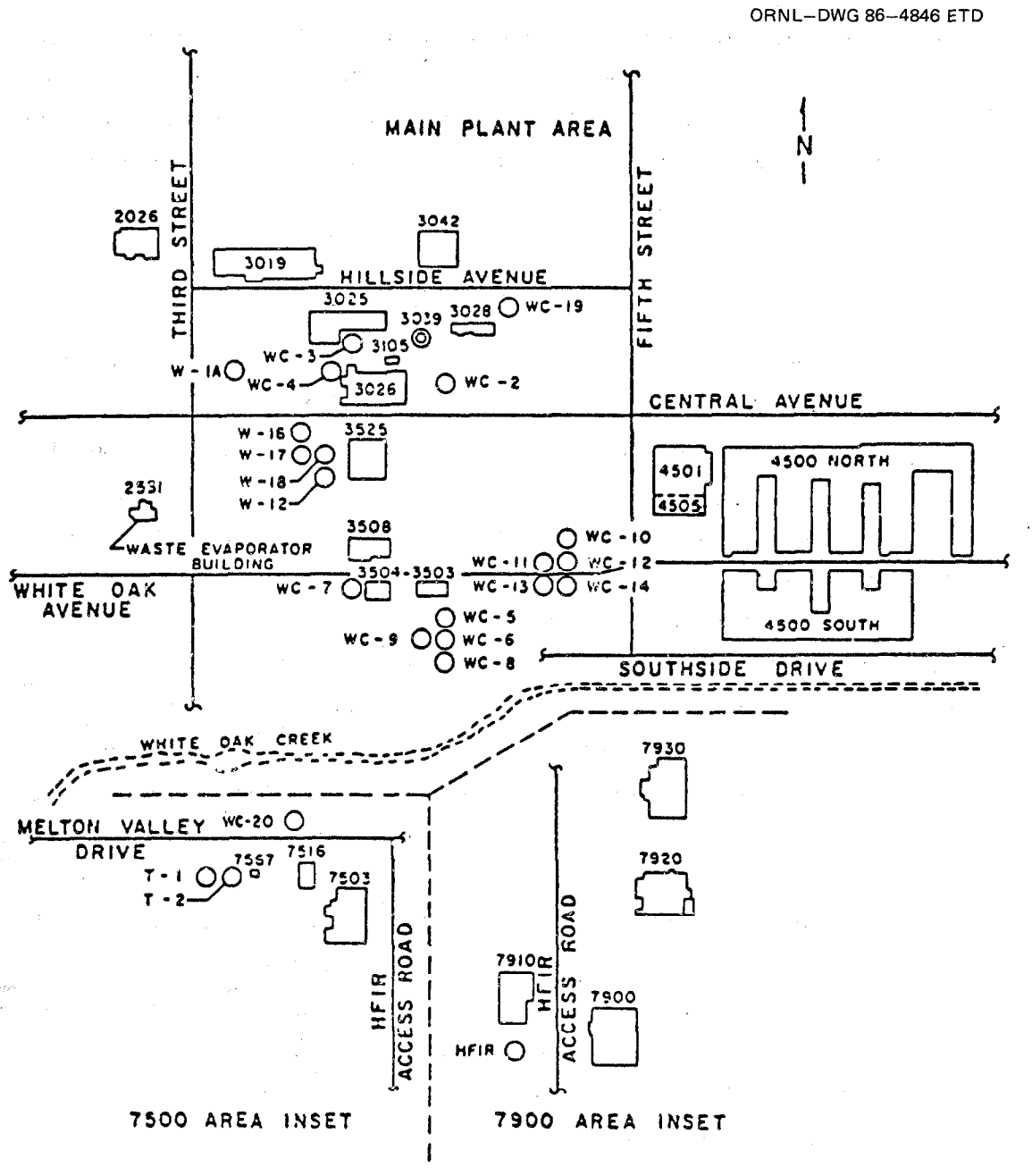

Fig. 10. Locations of LLW collection tanks and major source facilities.

ORNL-DWG 86-4847 ETD

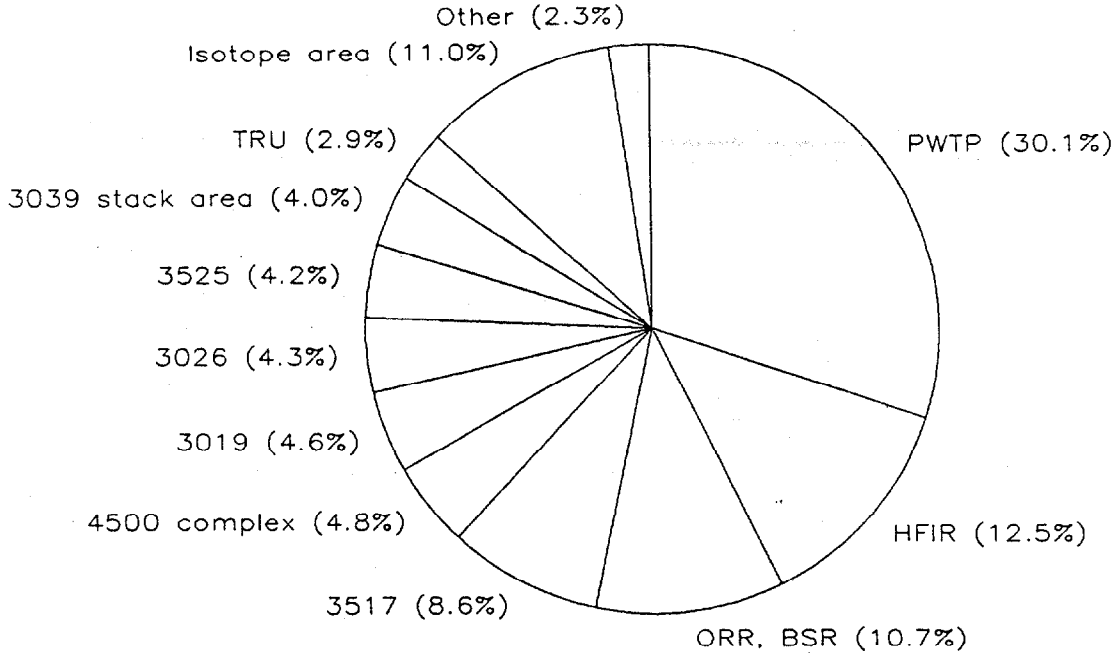

Fig. 11. Sources of LLW generated at ORNL in 1985.

Oak Ridge Research Reactor (ORR) and the HFIR. Tanks WC-10, WC-13, and WC-14 are located on a common pad south of Bldg. 3500 and are of the general description shown in Fig. 12. WC-10 collects wastes generated in the isotope area, including both isotope operations and scrubber solutions from the 3039 central stack. WC-13 and WC-14 collect wastes from a highly diverse set of sources in the 4500 complex. The Bldg. 2026 tank collects wastes generated during the analysis of radioactive samples received from facilities throughout ORNL. Wastes currently collected at Bldg. 3019 are primarily associated with the Consolidated Edison Uranium Solidification Program. The Bldg. 7920 tank collects wastes generated during the processing of transuranic targets irradiated in the HFIR. Samples taken from the reactor demineralizer systems were first-cycle acid regenerant taken from the cation (first) demineralizer in each system. As such, they represent "worst-case" data for such wastes. A typical flowsheet for a reactor demineralizer system is shown in Fig. 13. Along with the PWTP, these sources accounted for about 80% of the raw LLW collected in 1985.

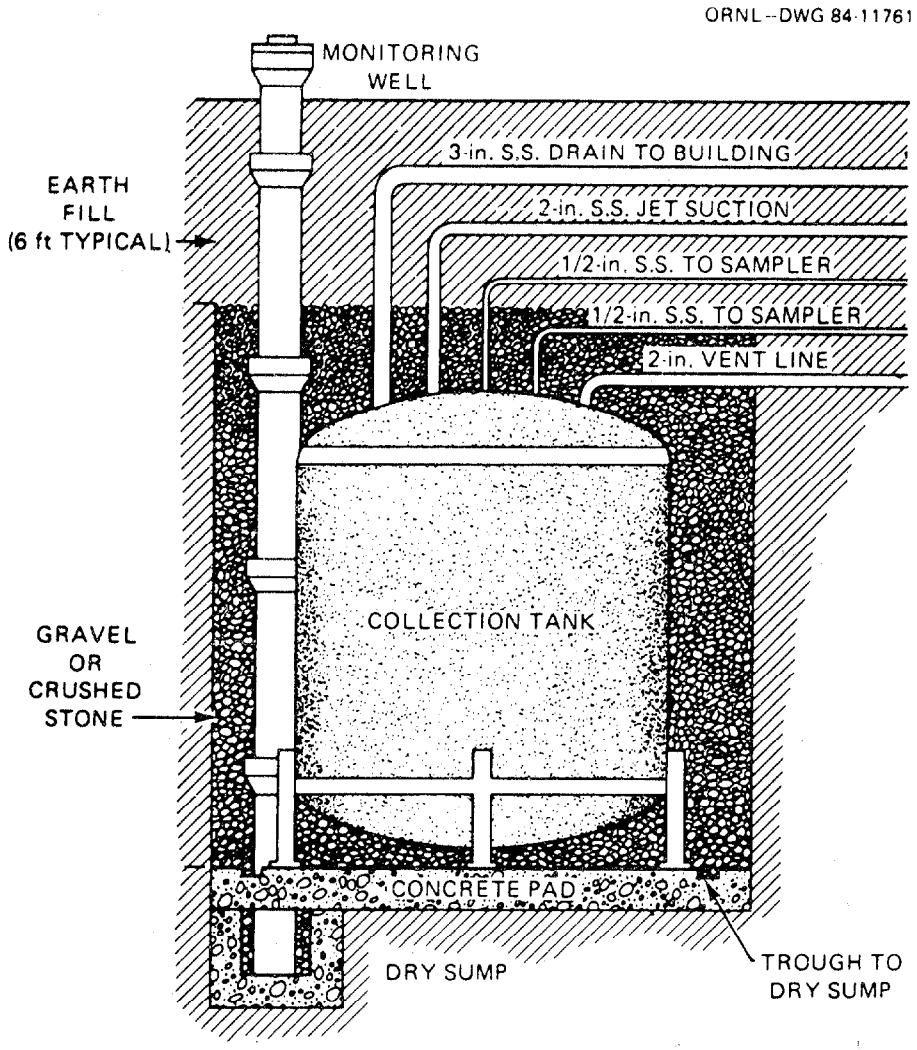

Fig. 12. Description of a typical LLW collection tank.

Surveys of source facility operators focused on the presence of unusual wastes, such as organics, and the presence of constituents that would result in wastes being classified RCRA hazardous. Other than the presence of organics in some of the Bldg. 7920 (TRU) wastes, these surveys did not reveal any unexpected information. Although the pH of some of the samples approaches the limit of 12.5 for classification as "characteristically corrosive," the existing data do not indicate that the raw LLW streams would be classified as hazardous under RCRA. However, current analytical capabilities prevent a rigorous evaluation of whether certain metals (including chromium) reach the criteria for classification as "characteristically toxic."

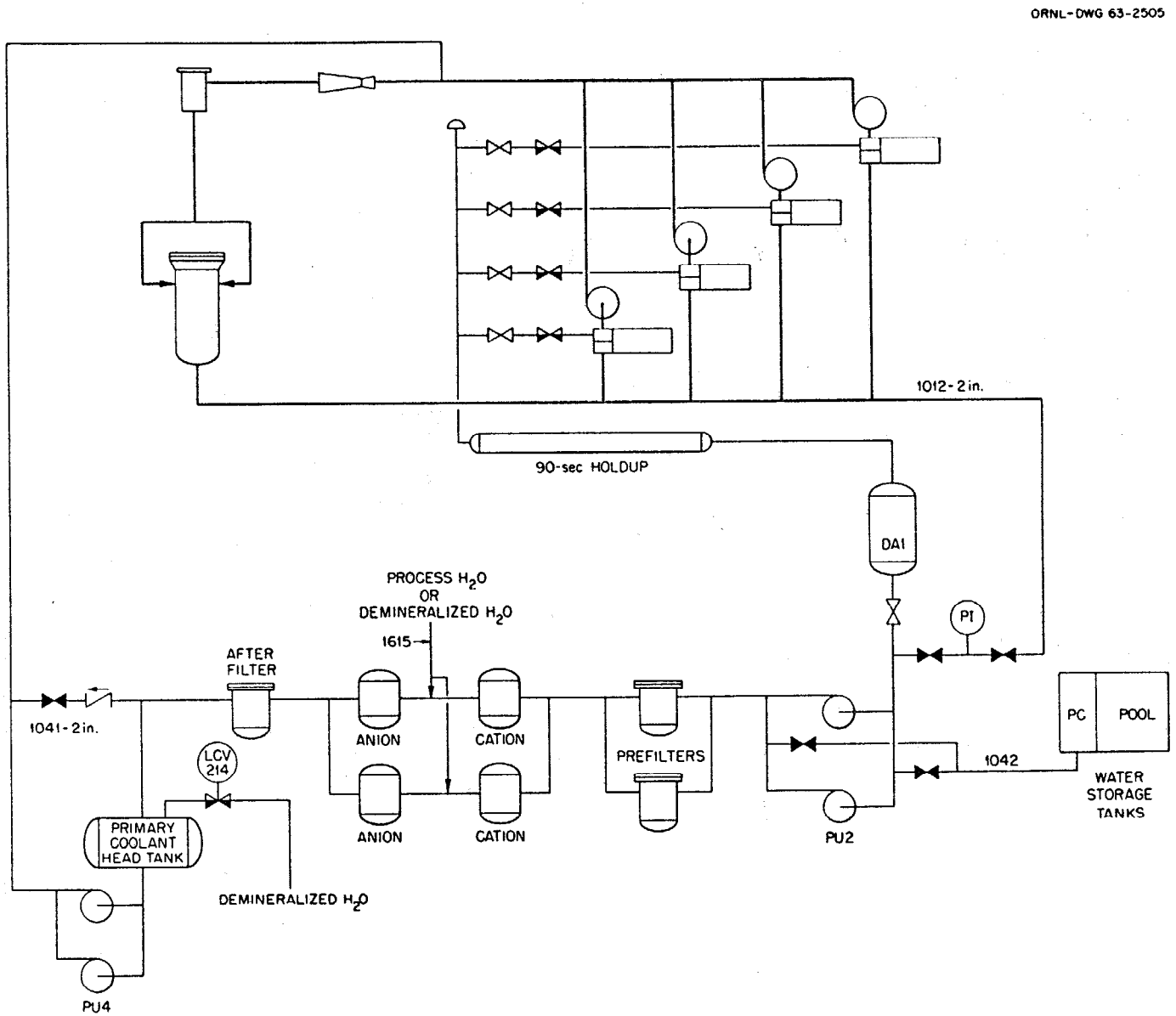

Fig. 13. Flowsheet of the HFIR primary demineralizer system.

3. ANALYTICAL FACILITIES AND METHODS

3.1 Facilities

Contents of LLW feed and concentrate tanks and samples from various source points of the LLW collection system were characterized within the ORNL ACD facilities, which were capable of providing most of the measurements required for the chemical and physical characterization. A noteworthy exception with respect to trace metals analyses is discussed later. To assist in understanding sample distribution and analysis responsibilities, an organization chart has been included as Fig. 3.

Radiochemical analyses were done in both RMAL and the TRU Facility. All of these samples were too radioactive to be analyzed in the Low-Level Radiochemical Analysis Laboratory. Gross alpha and gross beta measurements were made at both the RMAL and the TRU facilities.

Metals were analyzed by spark source mass spectrometry (SSMS) in the RMAL and by inductively coupled plasma spectrometry (ICP) in the general analysis laboratory (J. H. Stewart, group leader) located in Bldg. 4500S. The latter facility cannot handle radioactive samples above about 10 mR/h, so the ICP analyses were made on highly diluted samples. Dilution of this magnitude increases detection limits to nearly useless levels. At present, metals analyses have not been made with the required precision for RCRA hazardous/nonhazardous determinations to be made. Equipment is being procured for installation at RMAL; in the interim, however, possible analysis of metals by an outside laboratory is being considered.

Other physical and chemical measurements were made in both RMAL and the general analysis laboratory. Organic components have not been determined for the storage tank contents at the time of this writing; however, some LLW source samples have been examined for these compounds, and the results are included in this report. Difficulty with organic component analysis is detailed in the next section.

3.2 Methods

All samples were received at RMAL because of potentially high radionuclide content. Radioactivity was assessed by using monitoring instruments and gross alpha and beta measurements. After preliminary evaluation of radioactivity, the samples were split, processed as required (e.g., dissolution), diluted if necessary, and distributed to other ACD laboratories. Each laboratory generates a separate "customer report" from the ACD laboratory data/sample management system based on the DEC-10 central computer. The source of each data report is indicated from the first digit of the "request number" on the report: RMAL (3xxxx), TRU (4xxxx), Organic Lab (9xxxx), Mass and Emission Spectrometry Lab (6xxxx), and General Analysis Lab (5xxxx).

The unusual nature of the samples (especially the storage tank concentrates) caused considerable difficulty when conventional [including Environmental Protection Agency (EPA)] analytical methods were attempted. For example, the EPA extraction procedure with methylene chloride to separate organic compounds resulted in stable emulsion formation. Metals need to be determined at the specified RCRA levels (discussed in Sect. 5.5), but the extremely high salt contents and high radioactivities of most of these samples have limited analyses to SSMS on the neat (undiluted) samples and to ICP on highly diluted samples. Neither method has established the EPA-RCRA metals concentrations adequately to make a RCRA classification. Alternatives being pursued are (1) purchasing for RMAL an ICP and an atomic absorption (AA) spectrometer in which samples can be handled undiluted, (2) trying to do these analyses in-house by using isotope dilution spark source mass spectrometry (IDSSMS), and (3) finding an outside laboratory (if any) that can handle these samples (one such subcontract is currently being arranged).

Many standard methods were applied to these samples, but in the strict sense, these samples were not the type designated for the methods. For instance, all of the solids determinations are for water, ranging from drinking water to industrial wastewater. However, these saturated samples have no real definition concerning "total solids," "dissolved solids," and "filterable solids" because the salt contents are so high

that these parameters are very dependent on temperature and chemical composition. Some samples never "dried"; rather, they became viscous gels when the "total solids" method was being applied (even at temperatures up to 400°C).

When the presence of solids would obstruct the analytical procedure, samples were treated to dissolve solids. A lithium borate fusion was performed, followed by dissolution in nitric acid with final adjustment to about 2 N. The Methods used are summarized and referenced in Table 4. Should greater detail or explanation be needed, additional information is available from hard-copy records (contact either D. A. Costanzo or B. R. Clark).

Quality assurance (QA) is the responsibility of each laboratory, and QA procedures and performances are documented in periodic internal reports.

Table 4. Analytical methods

Parameter	Reference	Method summary	Lowest reporting limit
Gross alpha Gross beta	EPA 900.0, EC-101[a]	Sludges are treated to produce solutions; samples are diluted to the extent that no more than 5 mg/cm^2 of solids will form on the counting surface; a small liquid portion (100 μL) is evaporated on a stainless steel disk or planchette that is alpha/beta counted with typical instruments, e.g., Ludlum counters and a Tennelec Model 5100LB Series 2 system	About 1 count per minute or 2 pCi; EC-101 method gives 2 pCi/L for alpha and 4 pCi/L for beta
Gross gamma	EPA 901.1, EC-134	Sludges are treated to produce solutions; a known volume is contained in a polyethylene Marinelli beaker or wide-mouthed jar that is counted on a Ge(Li) detector; gamma-emitting radionuclides are determined from interpretation of the gamma spectrum of the sample; a typical instrument is the Nuclear Data 682 system	Lowest concentration is ~2.5 pCi/L; limit is dependent on gamma-ray branching ratios, counting geometry, photon-detection efficiency, and counting time
Americium-241 Curium-244	EC-102	Sample is dissolved, if necessary, and equilibrated with Am-243 tracer; after an extraction procedure with thenoyl-trifluoroacetone-xylene, the sample is dried on a stainless steel disk and analyzed by alpha pulse-height analysis	3×10^{-3} pCi/mL when using a 100-mL aliquot

Table 4 (continued)

Parameter	Reference	Method summary	Lowest reporting limit
Plutonium-238, -239, -240	EC-168	Sample is dissolved, if necessary, and equilibrated with Pu-242; after some chemical valence adjustments, the sample is extracted with thenoyltrifluoroacetone-xylene, dried on a stainless steel disk, and analyzed by alpha pulse-height analysis	4×10^{-5} pCi/mL when analyzing a 1-L sample, using 10 dpm of plutonium-242 tracer, counting for 1000 min on an alpha pulse-height analyzer system having a 20% efficiency and 0.005-cycles per minute background and realizing an 80% chemical recovery of plutonium
Strontium-90	EC-184	Sample is dissolved, if necessary; carrier is added, and several chemical purification steps follow: final purification is made by precipitation of the strontium as the oxalate that is mounted for beta counting on a low-background counter	0.004 pCi/mL when analyzing a 1-L sample, counting for 30 min on a beta counter with 0.6-cycles per minute background and a 25% efficiency and realizing an 80% chemical recovery of the strontium carrier
Tritium	EC-189	Aqueous samples are distilled; a portion of the distillate is counted on a liquid scintillation counter after mixing with an appropriate scintillation solution	5 pCi/mL when analyzing a 2-mL sample and counting for 200 min on a counter with a 20-cycles per minute background and a 38% counting efficiency

Table 4 (continued)

Parameter	Reference	Method summary	Lowest reporting limit
Carbon-14	None	Aqueous solutions are acidified with nitric acid, and CO_2 is distilled into a hyanine solution, a portion of which is counted on a scintillation counter after mixing with a appropriate scintillation solution	Comparable to tritium analysis
Metals by inductively coupled plasma	EPA 200.7	Samples are nebulized, the aerosol is excited in a plasma torch, and the intensity of the emission spectra produced by a radio-frequency inductively coupled plasma (which is monitored by photomultiplier tubes) is analyzed for 32 metals	1-50 µg/L (varies)
Anions	EPA 300.0	Samples (diluted, if necessary) are injected directly into an ion chromatograph, and the resultant spectrum is analyzed to identify anions and determine concentrations	1 µg/mL for F, Cl; 5 µg/mL for NO_3, SO_4, PO_4
Metals by spark source mass spectrometry	ACD Master Manual No. 4 0200	Approximately 50 elements are determined simultaneously by sparking the sample in a silver powder matrix in the source of a mass spectrometer	Depends on metal but is generally in the part per million lowest range; precision is about ±50%
Organic compounds (semi-volatile)	EPA 8270	Organics are removed from sludges by continuous reflux extraction with ether in a reflux still; liquids are extracted by elution through a reverse phase column (commercially available) where organics are held and subsequently eluted for analysis; the EPA gas chromatograph/mass spectrometry here is employed for the analysis of the concentrates	Varies, depending on compound and amount of starting material; with 1 L of liquid, limits are generally in the 10 parts per billion range

Table 4 (continued)

Parameter	Reference	Method summary	Lowest reporting limit
Total solids	EPA 160.3, EC-179	Method applies to liquids and is a simple measurement by weight of the residue left from a measured volume that is dried at 103 to 105°C for 1 h with repetition until constant weight is achieved	Depends on aliquot size
Dissolved solids	EPA 160.1, EC-176	An aliquot of liquid is filtered through a glass-fiber filter, and the filtrate is dried to constant weight at 180°C	Depends on aliquot size
Filterable solids	EPA 160.2, EC-180	The residue on the glass-fiber filter from EPA 160.1 (above) is dried to constant weight at 103 to 105°C	Depends on aliquot size
Total alkalinity	EPA 310.1	An unaltered sample is titrated to pH 4.5	Not defined
Hydroxyl normality	None	Fluoride and oxalate are added to a liquid sample to complex metals; the sample is titrated with HCl to an electrometrically measured endpoint	Not defined
Specific gravity	None	A simple mass per unit volume measurement is made with either a pycnometer or a pipet volume delivered to a weighing vessel	

[a]"EC" references are to Martin Marietta Energy Systems, Inc., Four Plant Environmental Analysis.

4. ANALYTICAL RESULTS

4.1 Melton Valley Storage Tanks

Data on the Melton Valley Storage Tanks come from the two sets of samples drawn in July and November 1985. Radiochemical analyses of alpha emitters are shown in Fig. 5. As with all tables of Melton Valley Storage Tanks data, four liquid samples are taken from W-24 through W-28 in July and a full set of liquid and solids samples (with the exception of liquid from W-31) taken in November. Note that the "sludge" sample taken in July is actually a liquid sample taken from the sludge region in the tanks. Gross alpha analyses were conducted at both the RMAL (Bldg. 2026) and TRU (Bldg. 7920) analytical laboratories. Both sets of values are listed for comparison. Radioisotope analyses presented in Table 5 were all conducted in the TRU laboratory. Discussions of "TRU-waste" issues appear in Sect. 6.2. Consistency of the alpha emitter data is discussed in Sect. 5.1.

Table 6 presents data on beta emitters. Duplicate gross beta data are again available from the RMAL and TRU laboratories. Gross gamma and most of the radioisotope data are from the TRU laboratory. Radioisotope data on the "pure" beta emitters (Sr-90, C-14, and H-3) are from RMAL. The consistency of the beta emitter data, along with the identification of potential errors, is covered in Sect. 5.2.

In addition to the general sampling and analyses activities previously described, some efforts were made to further determine which radioisotopes were associated with solids present in the waste and which were truly in solution. D. E. Ferguson had a subset of the July W-26 middle sample centrifuged and had the supernate analyzed for transuranic isotopes. As reported under request No. 45782, a plutonium concentration of 1.1 nCi/mL was found in the centrifuged supernate, and curium, americium, and uranium isotopes were below detection limits. More recently, V. L. Fowler has begun a series of filtration experiments on the July W-25 bottom sample in support of a design proposal for equipment to remove the supernate from the Melton Valley Storage Tanks. Cs-137 was the only isotope found in major quantities in the filtered supernate;

Table 5. Radiochemical analyses of alpha emitters in the Melton Valley Storage Tanks[a]

Tank	Sample date	Sample location	Gross alpha[b] TRU	Gross alpha[b] RMAL	Cm-244	Am-241	Pu-239 & Pu-240	Pu-238	U-233
W-24	July 85	Top[c]	18	21	15	0.16	1.4	2.3	1
	July 85	Middle[c]	38	35	26	2.4	2.6	3.1	1.8
	July 85	Bottom[c]	410	350	290	13	60	36	9.5
	July 85	Sludge[c]	2100	1000	1900	70	170	250	41
	Nov. 85	Liquid[c]	14	32					
	Nov. 85	Solids[d]	1700	1100	280	230	190	210	25
W-25	July 85	Top[c]	68	65	51	5.4	4.1	7.8	0.91
	July 85	Middle[c]	70	65	49	5.4	3.9	7.1	1
	July 85	Bottom[c]	1200	590	1100	100	6.9	10	120
	July 85	Sludge[c]	1300	780	1400	100	100	130	22
	Nov. 85	Liquid[c]	4	13					
	Nov. 85	Solids[d]	2600	2200	1750	310	170	320	73
W-26	July 85	Top[c]	86	62	49	4.4	4.2	3.6	3.5
	July 85	Middle[c]	89	68	54	4.9	4.8	3.9	3.2
	July 85	Bottom[c]	128	105	91	3.3	6	9.4	4.7
	July 85	Sludge[c]	300	205	210	15	32	55	17
	Nov. 85	Liquid[c]	9	41					
	Nov. 85	Solids[d]	2600	1600	350	190	250	190	60
W-27	July 85	Top[c]	84	89	74	4.2	3.1	6.3	2.3
	July 85	Middle[c]	89	95	75	5.8	3.1	6.3	2
	July 85	Bottom[c]	260	220	190	19	8.4	13	3.8
	July 85	Sludge[c]	250	220	190	18	9.5	16	4.9
	Nov. 85	Liquid[c]	7	22					
	Nov. 85	Solids[d]	1400	1200	1570	220	200	90	43
W-28	July 85	Top[c]	6	16	2.2		0.19	0.35	0.17
	July 85	Middle[c]	46	12	2.1		0.21	0.28	0.2
	July 85	Bottom[c]	460	1900	430	8.9	9.1	29	17
	July 85	Sludge[c]	540	1500	590	16	13	34	24
	Nov. 85	Liquid[c]	89	130					
	Nov. 85	Solids[d]	890	620	300	100	50	60	47
W-29	Nov. 85	Liquid[c]	4	7					
	Nov. 85	Solids[d]	6000	2200	3570	470	220	390	74
W-30	Nov. 85	Liquid[c]	5	5					
	Nov. 85	Solids[d]	380	290	100	80	160	20	12
W-31	Nov. 85	Solids[d]	3100	3000	2350	340	200	230	61

[a]All data from the TRU laboratory except RMAL gross alpha.
[b]July RMAL data: Request No. 34380, received 7/1/85, completed 2/5/86.
July TRU data: Request No. 45298, received 7/22/85, completed 9/10/85.
Nov. RMAL data: Request No. 34523, received 11/7/85, completed 11/26/85.
Nov. TRU data: Request No. 45764, received 1/30/86, completed 2/6/86.
[c]nCi/mL for liquid samples.
[d]nCi/g for solid samples.

Table 6. Radiochemical analyses of beta emitters in the Melton Valley Storage Tanks

Tank	Sample date	Sample location	Gross beta[a,b] TRU	Gross beta[a,b] RMAL	Gross gamma (c/min-mL)	Sr-90	CS-137	CS-134	Co-60	Eu-152	Eu-154	Eu-155	Zr-95	Ru-106	Au-198	C-14	H-3
W-24	July 85	Top[c]	110,000	16,600	2.55E+06	865	13,600	61	178	132	83	14	41	132	[d]	1	20
	July 85	Middle[c]	110,000	16,900	1.59E+06	1,290	12,900	55	302	217	13	49	57	105		1	20
	July 85	Bottom[c]	390,000	57,800	6.30E+06	9,430	15,400	<1.5	624	464	324	111	136	<3		1	20
	July 85	Sludge[c]	1,600,000	263,000	1.20E+07	263,000	7,990	<1.5	2,360	1,910	1,390	483	599	238		2	21
	Nov. 85	Liquid[c]	7,380	8,620	2.82E+06	657	2,050		760	13,000		2,240			270		
	Nov. 85	Solids[e]	187,000	170,000	4.41E+06	76,000	1,680		1,580	N.D.[f]	1,440	610	640		40		
W-25	July 85	Top[c]	81,000	11,600	2.76E+06	2,430	6,400	48	94	93	61	12	24	98		0	14
	July 85	Middle[c]	79,000	11,700	2.76E+06	2,780	6,260	44	98	73	80	17	24	<3		0	14
	July 85	Bottom[c]	1,600,000	144,000	4.50E+06	55,700	2,610	N.D.	1,590	2,240	1,270	599	629	<3		0	14
	July 85	Sludge[c]	1,000,000	169,000	6.60E+06	238,000	5,290	N.D.	2,130	2,840	1,910	702	878	N.D.		0	14
	Nov. 85	Liquid[c]	3,430	3,410	1.08E+06	789	540			N.D.							
	Nov. 85	Solids[e]	414,000	365,000	8.10E+06	162,000	7,810		1,360	1,170	1,060	320	N.D.		N.D.		
W-26	July 85	Top[c]	100,000	15,000	1.77E+06	1,320	2,730	84	319	392	201	86	100	678		0	5
	July 85	Middle[c]	110,000	14,900	1.86E+06	1,260	2,750	105	319	400	177	84	93	680		0	5
	July 85	Bottom[c]	130,000	16,900	2.01E+06	6,000	2,750	85	370	424	228	95	110	602		0	5
	July 85	Sludge[c]	160,000	23,300	2.34E+06	8,160	3,000	76	540	610	356	134	209	502		0	5
	Nov. 85	Liquid[c]	10,100	9,840	9.14E+05	4,410	390		20	20							
	Nov. 85	Solids[e]	179,000	181,000	2.70E+06	80,300	880		1,470	800	N.D.	240	N.D.		50		
W-27	July 85	Top[c]	100,000	15,600	5.40E+06	1,350	11,700	57	234	198	143	39	65	185		0	9
	July 85	Middle[c]	110,000	15,800	5.40E+06	1,390	12,200	67	264	251	136	58	57	235		0	9
	July 85	Bottom[c]	150,000	21,600	5.70E+06	3,620	12,000	71	419	473	292	N.D.	123	335		0	9
	July 85	Sludge[c]	140,000	21,900	5.70E+06	3,780	12,100	54	446	473	292	111	117	497		0	9
	Nov. 85	Liquid[c]	7,160	6,920	1.20E+06	2,140	500		10								
	Nov. 85	Solids[e]	1,400,000	126,000	4.64E+06	53,000	3,000		3,030	1,010	N.D.	180	N.D.		N.D.		
W-28	July 85	Top[c]	45,000	6,920	1.20E+06	1,950	2,370	230	16	N.D.	N.D.	N.D.	N.D.	212		0	5
	July 85	Middle[c]	47,000	7,350	1.23E+06	2,000	2,450	244	21	N.D.	N.D.	N.D.	N.D.	226		0	5
	July 85	Bottom[c]	110,000	17,600	3.30E+06	3,620	2,450	232	1,360	923	516	197	235	1,570		0	5
	July 85	Sludge[c]	130,000	20,200	4.20E+06	4,110	2,390	254	1,750	1,190	756	247	316	2,200		0	5
	Nov. 85	Liquid[c]	8,490	10,100	2.03E+06	3,650	250		30	300	140		20				
	Nov. 85	Solids[e]	23,600	20,500	4.72E+06	5,700	840		2,180	3,030	1,760	690	920		60		
W-29	Nov. 85	Liquid[c]	2,320	2,120	9.67E+05	59	380		30								
	Nov. 85	Solids[e]	43,000	35,400	5.77E+06	12,300	1,650		1,160	4,590	2,840	860	N.D.		100		
W-30	Nov. 85	Liquid[c]	1,150	981	2.34E+05	284	100		<10								
	Nov. 85	Solids[e]	53,200	45,700	4.44E+05	20,000	480		N.D.	N.D.	N.D.	20	N.D.				
W-31	Nov. 85	Solids[e]	403,000	422,000	3.65E+06	201,000	3,840		1,230	550	700	50	N.D.		N.D.		

[a]Gross beta (RMAL), Sr-90, H-3, and C-14 from the RMAL; all other data from the TRU laboratory
[b]July RMAL data: Request No. 34380, received 7/1/85, completed 2/5/86.
July TRU data: Request No. 45298, received 7/22/85, completed 9/10/85.
Request No. 45494, received 10/16/85, completed 10/16/85.
November RMAL data: Request No. 34523, received 11/7/85, completed 11/26/85.
November TRU data: Request No. 45764, received 1/30/86, completed 2/6/86.
[c]nCi/mL for liquid samples.
[d]A blank space means no data available.
[e]nCi/g for solid samples.
[f]"N.D." means not detected in gamma scan.

concentrations of all transuranic isotopes were below 0.1 nCi/mL. A separate report on Fowler's work will be issued at a later date.

Physical property data from RMAL are presented in Table 7.

Two sets of chemical composition data are given in Tables 8 and 9. Table 8 presents ICP and anion data on the July set of samples from the liquid phase. Considerable dilution of these samples was necessary to allow handling in the unshielded ICP facilities, which raised the detection limits significantly. Thus, most analyses are reported as being below detection limits. SSMS data on the samples taken in July are shown in Table 9. A discussion of this semiquantitative technique is given in Chap. 3.

4.2 Evaporator Service Tanks

Tables 10–12 present alpha emitters, beta emitters, and physical property data on samples from tanks W-21 through W-23 in the same format as was used for the Melton Valley Storage Tanks. These three tanks were sampled only once, in November. Solids samples were taken from all three, and a liquid sample from W-23. Tanks C-1 and C-2 were not sampled.

No chemical analyses were made of the samples taken from the Evaporator Service Tanks in November. However, some data are available from samples taken by O. L. Culberson in May 1985. The first two columns of Table 13 give RMAL, ICP, and anion data on samples of feed and concentrate at the LLW evaporator (Bldg. 2531). These samples were representative of liquid in either tank W-21 or W-22 and in tank W-23. However, this system continues to be operated, and further material transfers have replaced the LLW evaporator feed and concentrate represented in Table 13.

4.3 Gunite Storage Tanks

As noted in Sect. 2.5, the residual solids in the Gunite Storage Tanks are in a highly inhomogeneous, partially crystalline form. Liquid in tank W-10 results from transfers from facilities piped into that tank

Table 7. Physical properties of samples from the Melton Valley Storage Tanks[a]

Tank	Sample date[b] (Liquid sample units:) (solids sample units:)	Sample location	Specific gravity (none)	Total solids (g/l) (mg/g)	Dissolved solids (g/l)	OH- (normal) (meq/g)	Total alkalinity (ppm)
W-24	July 85	Top	1.2755	469	576	1.15	6.10E+04
	July 85	Middle	1.2714	539	493	1.18	6.20E+04
	July 85	Bottom	1.3016	697	565	1.23	7.25E+04
	July 85	Sludge	1.3850	469	502	0.91	1.28E+05
	Nov. 85	Liquid	1.2775	487	427	0.92	
	Nov. 85	Solids		454		0.65	
W-25	July 85	Top	0.9714	517	278	0.67	3.70E+04
	July 85	Middle	0.9912	499	279	0.65	3.85E+04
	July 85	Bottom	1.0814	430	290	1.00	6.40E+04
	July 85	Sludge	1.0512	515	297	1.14	8.40E+04
	Nov. 85	Liquid	1.2314	469	362	0.61	
	Nov. 85	Solids		580		0.26	
W-26	July 85	Top	1.2994	618	547	0.01	2.70E+03
	July 85	Middle	1.3036	655	488	0.01	3.20E+03
	July 85	Bottom	1.2986	653	485	<0.01	5.00E+03
	July 85	Sludge	1.3404	742	485	<0.01	5.20E+03
	Nov. 85	Liquid	1.2450	429	383	0.01	
	Nov. 85	Solids		413		<0.01	
W-27	July 85	Top	1.1438	287	255	0.24	3.30E+04
	July 85	Middle	1.1541	310	241	0.25	3.20E+04
	July 85	Bottom	1.1558	326	240	0.26	4.40E+04
	July 85	Sludge	1.1662	323	241	0.28	4.50E+04
	Nov. 85	Liquid	1.2182	405	337	<0.01	
	Nov. 85	Solids		408		0.11	
W-28	July 85	Top	1.2403	434	467	0.02	2.00E+03
	July 85	Middle	1.2521	438	445	0.02	2.00E+03
	July 85	Bottom	1.2703	490	470	0.40	5.15E+04
	July 85	Sludge	1.2357	494	450	0.50	6.65E+04
	Nov. 85	Liquid	1.3250	597	509	0.04	
	Nov. 85	Solids		450		0.56	
W-29	Nov. 85	Liquid	1.2688	442	415	0.80	
	Nov. 85	Solids		428		0.01	
W-30	Nov. 85	Liquid	1.2577	492	386	1.00	
	Nov. 85	Solids		342		0.04	
W-31	Nov. 85	Solids		344		0.03	

[a]All data from the RMAL.
[b]July data: Request No. 34380, received 7/1/85, completed 2/5/86.
Nov. data: Request No. 34523, received 11/7/85, completed 11/26/85.

Table 8. ICP and anion analyses of liquids in the Melton Valley Storage Tanks[a,b]

Element or anion	Sample (μg/mL)				
	W-24 M	W-25 M	W-26 M	W-27 M	W-28 M
Sodium	120,000	83,000	79,000	53,000	82,000
Calcium	<30	<30	14,000	<30	5,100
Magnesium	<75	<75	1,200	<75	220
Silicon	160	90	<30	68	<30
Lithium	150	61	75	60	90
Zinc	55	50	31	13	6.2
Phosphorus	<45	<45	<45	52	<45
Aluminum	<30	41	<30	<30	<30
Strontium	<0.75	<0.75	35	<0.75	22
Copper	14	11	23	10	3.4
Barium (100)[c]	<3.0	<3.0	8	<3.0	8.5
Chromium (5)[c]	<6.0	<6.0	<6.0	6.3	<6.0
Cadmium (1)[c]	<0.75	<0.75	<0.75	1.4	<0.75
Silver (5)[c]	<7.5	<7.5	<7.5	<7.5	<7.5
Arsenic (5)[c]	<15	<15	<15	<15	<15
Boron	<12	<12	<12	<12	<12
Beryllium	<0.30	<0.30	<0.30	<0.30	<0.30
Cobalt	<1.5	<1.5	<1.5	<1.5	<1.5
Iron	<4.5	<4.5	<4.5	<4.5	<4.5
Gallium	<45	<45	<45	<45	<45
Hafnium	<6.0	<6.0	<6.0	<6.0	<6.0
Manganese	<0.75	<0.75	<0.75	<0.75	<0.75
Molybdenum	<6.0	<6.0	<6.0	<6.0	<6.0
Nickel	<9.0	<9.0	<9.0	<9.0	<9.0
Lead (5)[c]	<30	<30	<30	<30	<30
Antimony	<30	<30	<30	<30	<30
Selenium (1)[c]	<30	<30	<30	<30	<30
Titanium	<3.0	<3.0	<3.0	<3.0	<3.0
Vanadium	<1.5	<1.5	<1.5	<1.5	<1.5
Zirconium	<3.0	<3.0	<3.0	<3.0	<3.0
Nitrate	240,000	180,000	260,000	89,000	200,000
Chloride	4,100	2,900	2,900	2,700	2,900
Sulfate[d]					
Fluoride[d]					
Bromide[d]					
Phosphate[d]					

[a]July sampling.
[b]Request No. 53607, received 1/14/86, completed 1/21/86.
[c]EP toxicity levels follow constituent names in parentheses.
[d]Could not analyze in presence of nitrates.

[a]

Anion[b]	W-24 T	W-24 M	W-27 S	W-28 T	W-28 M	W-28 B	W-28 S
Nitrate	260	260	130	330	320	330	330
Chloride	4.2	3.5					
Sulfate	<1	<1	1.8	<1	<1	<1	<1
Element[d]							
Sodium	Major	Major	Major	Major	Major	Major	Major
Potassium	5000	5000	5000	8000	9000	5000	5000
Calcium	500	2000	4000	2000	3000	8000	5000
Boron	300	500	400	10	10	30	30
Aluminum	40	40	300	20	10	200	200
Iron	200	50	400	20	20	300	300
Phosphorus	30	20	400	5	5	50	50
Barium	70	40	100	3	10	30	20
Magnesium	200	300	1000	100	100	2000	2000
Sulfur	200	200	800	200	100	200	200
Zinc	20	20	100	10	10	100	50
Silicon	20	30	100	10	10	50	100
Manganese	5	5	30	1	<1	30	30
Chromium	5	5	30	3	3	20	20
Uranium	200	300	6000	<30	<30	5000	7000
Thorium	50	100	600	<10	<10	500	500
Nickel	50	10	30	30	30	100	200
Bismuth	5	10	10	<3	<3	<10	<10
Lead	<10	10	20	<3	<3	<10	50
Titanium	10	5	20	<10	<10	30	<10
Strontium	10	5	10	30	20	30	20
Copper	<10	<10	<10	20	10	20	20
Zirconium	<3	<3	<3	<3	<3	<3	<3
Vanadium	3	3	10	1	3	5	3
Tungsten							
Cobalt	<3	<3	<3	<1	<1	10	5
Molybdenum	<3	<3	<3	<3	<3	<3	<3
Lanthanum	<1	<1	<1	<1	<1	<1	<1
Cerium	5	<3	<3	<3	<3	<3	<3

[a]July sampling.
[b]Anion data: Request Nos.
[c]A blank space means no da
[d]Elemental data: Request

Table 10. Radiochemical analyses of alpha emitters in the Evaporator Service Tanks[a]

Tank	Sample date	Sample location	Gross alpha		Cm-244	Am-241	Pu-239 & Pu-240	Pu-238	U-233
			TRU[b]	RMAL[c]					
W-21	Nov. 85	Solids[d]	5110	1980	810	70	380	830	50
W-22	Nov. 85	Solids[d]	3510	2260	1100	100	190	280	58
W-23	Nov. 85	Liquid[e]	870	710	280	50	50	90	38
	Nov. 85	Solids[d]	6970	3190	2190	<30	580	500	130

[a]All data from the TRU laboratory except RMAL gross alpha.
[b]TRU data: Request No. 45764, received 1/30/86, completed 2/6/86.
[c]RMAL data: Request No. 34529, received 11/12/85, completed 11/22/85.
[d]nCi/g for solid samples.
[e]nCi/mL for liquid samples.

Table 11. Radiochemical analyses of beta emitters in the Evaporator Service Tanks[a]

Tank	Sample date	Sample location	Gross beta		Gross gamma (c/min-mL)	Sr-90	Cs-137	Co-60	Eu-152	Eu-154	Eu-155	Zr-95	Nb-95	Au-198
			TRU[b]	RMAL[c]										
W-21	Nov. 85	Solids[d]	84,900	68,300	1.49E+07	16,400	6,760	1,060	11,600	5,840	2,400	2,660	200	270
W-22	Nov. 85	Solids[d]	56,500	53,700	1.18E+07	10,200	5,050	740	10,900	5,350	2,060	2,920	330	260
W-23	Nov. 85	Liquid[e]	66,800	49,800	1.25E+07	9,400	2,040	760	13,000	[f]	2,250		200	270
	Nov. 85	Solids[d]	237,000	205,000	1.35E+07	73,700	6,510	880	12,100	8,220	2,550	3,400		230

[a]All data from the TRU laboratory except RMAL gross beta and Sr-90.
[b]TRU data: Request No. 45764, received 1/30/86, completed 2/6/86.
[c]RMAL data: Request No. 34529, received 11/12/85, completed 11/22/85.
[d]nCi/g for solid samples.
[e]nCi/mL for liquid samples.
[f]A blank space means no data available.

Table 12. Physical properties of samples from the Evaporator Service Tanks[a]

Tank	Sample date	Sample location	Specific gravity (none)	Solids in liquid (mg/mL) Total	Solids in liquid (mg/mL) Dissolved	Solids in sludge (mg/g)	OH- (normal)
W-21	Nov. 85	Solids	1.2171			322	0.02
W-22	Nov. 85	Solids	1.0302			222	<0.01
W-23	Nov. 85	Liquid	1.3922	766	541		0.03
	Nov. 85	Solids	1.3051			499	0.07

[a]Request No. 34529, received 11/12/85, preliminary results 11/22/85.

(such as Bldg. 3505) and into the LLW collection header; thus, the composition changes with time. Therefore, no definitive characterization of this material is practical. Analyses of material removed from these tanks during the Gunite Tank Sludge Removal project are given in Appendix A.

4.4 PWTP Evaporator Concentrate

RMAL, ICP, and anion data on duplicate samples taken at PWTP are given in Table 13. The columns labeled "PWTP concentrate" and "PWTP bypass" were taken under the direction of O. L. Culberson in May and are representative of the feed (bypass) and concentrate at the PWTP evaporator. Additional duplicate samples of the PWTP evaporator concentrate were taken as part of the characterization of LLW sources in September. These are labeled "3544 EVAP" in Table 13.

4.5 LLW Collection System

Data on duplicate samples taken from a variety of LLW source tanks and facilities are presented in Tables 14—16. Locations and functions of the source tanks and facilities are discussed in Sect. 2.7. Table 14 gives RMAL, ICP, and anion data on the samples indicated. Dilution of many of these samples was again required to allow handling in the ICP laboratory, and, as a result, detection limits are higher than normal.

Table 13. RMAL, ICP, and anion data on feed and concentrate samples from the LLW and PWTP evaporator systems

Substance	LLW feed	LLW conc.	PWTP conc.	PWTP bypass	3544 EVAP A	3544 EVAP B
			RMAL data			
Request No.	34301[a]	34301[a]	34301[a]	34301[a]	34472[b]	34472[b]
Gross beta, Bq/mL	18,000	174,000	3,360	313	5,750	5,890
Gross alpha, Bq/mL	102	53	1.4	<0.3	8.8	20
Specific gravity	[c]		1.4097			
H+ normality			1.99	0.66	2.7	1.9
Total solids, g/L	114.9	575.8	637.2	121.4	661.0	765.5
Dissolved solids, g/L					566.3	671.5
			ICP data (μg/mL)			
Request No.	52677[d]	52677[d]	52677[d]	52677[d]	53226[e]	53226[e]
Silver	<4.2	<15	<36	<4.2	<14	<14
Aluminum	<12	<42	<100	<12	<55	68
Arsenic	<12	<42	<100	<12	<28	<28
Boron	<6	<21	<51	<6	<22	<22
Barium	3.2	9.8	38	3.2	64	72
Beryllium	<0.06	<0.21	<0.51	<0.06	<0.55	<0.55
Calcium	7,400	19,000	72,000	6,400	92,000	100,000
Cadmium	<0.54	<1.9	<4.6	<0.54	<1.4	<1.4
Cobalt	<1.2	<4.2	<10	<1.2	<2.8	<2.8
Chromium	1.2	<4.2	33	1.2	29	29
Copper	<1.2	<4.2	11	3.1	270	270
Iron	<1.8	<6.3	110	9.5	98	99
Gallium	<30	<110	<260	<30	<83	<83
Hafnium	<3.6	<13	<31	<3.6		
Potassium	130	14,000	1,300	72	1,800	1,325
Lithium	<12	86	<100	<12	<55	<55
Magnesium	330	680	14,000	1,300	18,000	21,000
Manganese	<0.18	<0.63	9	0.6	26	36
Molybdenum	<1.2	<4.2	<10	<1.2	<11	<11
Sodium	19,000	130,000	30,000	23,000	5,000	5,600
Nickel	<3.6	<13	<31	<3.6	20	19
Phosphorus	<18	<63	<150	<18	120	120
Lead	<12	<42	<100	<12	<55	<55
Antimony	<18	<63	<150	<18	<55	<55
Selenium	<24	<84	<200	<24	<55	<55
Silicon	<4.8	17	<41	6.4	<55	<55
Strontium	11	44	140	12	210	230
Titanium	<1.2	<4.2	<10	<1.2	<5.5	<5.5
Vanadium	<1.8	<6.3	22	2.2	<2.8	<2.8
Zinc	<1.2	<4.2	28	<1.2	120	140
Zirconium	<3.6	<13	<31	<3.6	<5.5	<5.5
Anions						
Nitrate					680	690

[a]Request No. 34301, received 5/6/85, completed 7/1/85.
[b]Request No. 34472, received 9/19/85, completed 9/23/85.
[c]A blank space indicates no data available.
[d]Request No. 52677, received 5/14/85, completed 6/20/85.
[e]Request No. 53226, received 9/28/85, completed 10/22/85.

samples

Substance	RU aqueous A	RU aqueous B	ORR primary A	ORR primary B	HFIR primary A	HFIR primary B
Request No.	34461[a]2[c]	34462[c]	34440[d]	34440[d]	34440[d]	34440[d]
Gross beta, Bq/mL	1.6E+0+06	1.8E+06	7.0E+04	7.1E+04	3.1E+04	3.0E+04
Gross alpha, Bq/mL	e		4	1.1	2.4	2
Sr-90, Bq/mL	617 +05	3.6E+05	1100	1220	6.6	5.9
C-14, Bq/mL			0.06	0.03	0.03	0.05
H-3 Bq/mL			14.3	14.1	30.9	26.3
Specific gravity	1.0007 27	1.1025	1.0390	1.0410	1.0190	1.0223
pH	11.0	12.0	1.0	1.0	2.0	2.0
Total solids, g/L	1.0 9	141.1	5.0	2.5	1.9	2.0
Dissolved solids, g/L	0.09		3.0	5.4	2.2	3.0
Request No.	4[h]	53334[h]	53254[i]	53254[i]	53254[i]	53254[i]
Silver	10	<310	<0.05	<0.05	<0.05	<0.05
Aluminum	00	<1,200	<0.2	<0.2	<0.2	<0.2
Arsenic	20	<620	<0.1	<0.1	<0.1	<0.1
Boron	00	<500	<0.08	<0.08	<0.08	<0.08
Barium	20	<120	<0.02	<0.02	<0.02	<0.02
Beryllium	13	<13	0.005	0.0059	0.0067	0.0064
Calcium	00	<1,200	<0.2	<0.2	<0.2	<0.2
Cadmium	31	<31	0.063	0.066	<0.005	<0.005
Cobalt	62	<62	<0.01	<0.01	<0.01	<0.01
Chromium	50	<250	<0.04	<0.04	<0.04	<0.04
Copper	20	<120	0.98	0.77	0.97	0.99
Iron	90	<190	<0.03	<0.03	0.042	<0.03
Gallium	00	<1,900	<0.3	<0.3	<0.3	<0.3
Hafnium	50	<250	<0.04	<0.04	<0.04	<0.04
Potassium			<50	<50	<50	<50
Lithium	00	<1,200	<0.2	<0.2	<0.2	<0.2
Magnesium	90	<190	0.038	0.031	0.081	0.073
Manganese	31	<31	<0.005	<0.005	<0.005	<0.005
Molybdenum	50	<250	<0.04	<0.04	<0.04	<0.04
Sodium	00	35,000	0.91	0.91	<0.5	<0.5
Nickel	70	<370	<0.06	<0.06	<0.06	<0.06
Phosphorus	00	2,700	<0.3	<0.3	<0.3	<0.3
Lead	00	<1,200	0.54	0.29	0.54	0.52
Antimony	00	<1,200	<0.2	<0.2	<0.2	<0.2
Selenium	00	<1,200	<0.2	<0.2	<0.2	<0.2
Silicon	00	9,900	<0.2	<0.2	<0.2	<0.2
Strontium	31	2,300	<0.005	<0.005	<0.005	<0.005
Titanium	20	<120	<0.02	<0.02	<0.02	<0.02
Vanadium	62	<62	<0.01	<0.01	<0.01	<0.01
Zinc	20	<120	0.46	0.2	0.46	0.45
Zirconium	20	<120	<0.02	<0.02	<0.02	<0.02
Anions						
Sulfate			<2,500	<2,500	5,400	5,600
Nitrate			83,000	84,000	26,000	26,000
Flouride			<500	<500	<500	<500
Chloride			<500	<500	<500	<500
Bromide			<2,500	<2,500	<2,500	<2,500
Phosphate			<2,500	<2,500	<2,500	<2,500

[a]Request No. 34461, recompleted 11/18/85.
[b]Request No. 34509, recompleted 11/13/85.
[c]Request No. 34462, recompleted 11/13/85.
[d]Request No. 34440, recompleted 11/6/85.
[e]A blank space indicate

Table 15. Detection limits for organic analyses of LLW collection system samples

NPDES No.	Constituent	Detection limit (μg/L)	NPDES No.	Constituent	Detection limit (μg/L)
11A	2,4,6-trichlorophenol	10	11B	bis(2-chloroethyl)ether	10
08A	p-chloro-m-cresol	10	16B	2-chloronaphthalene	10
01A	2-chlorophenol	10	20B	1,2-dichlorobenzene	10
02A	2,4-dichlorophenol	10	21B	1,3-dichlorobenzene	10
03A	2,4-dimethylphenol	10	22B	1,4-dichlorobenzene	10
06A	2-nitrophenol	20	23B	3,3'-dichlorobenzidine	50
07A	4-nitrophenol	50	27B	2,4-dinitrotoluene	10
05A	2,4-dinitrophenol	50	28B	2,6-dinitrotoluene	10
04A	4,6-dinitro-2-methylphenol	20	30B	1,2-diphenylhydrazine	20
09A	pentachlorophenol	50	31B	fluoranthene	10
10A	phenol	10	17B	4-chlorophenyl phenyl ether	10
	benzoic acid	50	14B	4-bromophenyl phenyl ether	10
	o-cresol	10	12B	bis(2-chloroisopropyl)ether	10
	p-cresol	10	10B	bis(2-chloroethoxy)methane	10
	2,4,5-chlorophenol	10	06B	benzo(a)pyrene	10
34B	hexachlorobutadiene	10	07B	benzo(b)fluoranthene	10
35B	hexachlorocyclopentadiene	10	09B	benzo(k)fluoranthene	10
38B	isophorone	10	18B	chrysene	10
39B	naphthalene	10	02B	acenaphthylene	10
40B	nitrobenzene	10	03B	anthracene	10
41B	n-nitrosodimethylamine	50	08B	benzo(ghi)perylene	20
43B	n-nitrosodiphenylamine	20	32B	fluorene	10
42B	n-nitrosodipropylamine	20	44B	phenanthrene	10
13B	bis(2-ethylhexyl)phthalate	10	19B	dibenzo(a,h)anthracene	20
15B	benzyl butyl phthalate	10	37B	indeno(1,2,3-cd)pyrene	20
26B	di-n-butyl phthalate	10	45B	pyrene	10
29B	di-n-octyl phthalate	10		anilline	10
24B	diethyl phthalate	10		benzylalchohol	10
25B	dimethyl phthalate	10		4-chloroaniline	10
05B	benzo(a)anthracene	50		dibenzofuran	10
01B	acenaphthene	10		2-methylnapthalene	10
04B	benzidine	50		2-nitroaniline	10
46B	1,2,4-trichlorobenzene	10		3-nitroaniline	10
33B	hexachlorobenzene	10		4-nitroaniline	10
36B	hexachloroethane	10			

These samples were also analyzed for organic constituents. In nearly all cases, concentrations of organics were below the detection limits of the analyses. Analyses conducted and the associated detection limits are listed in Table 15. Concentrations of 4900 μg/L of di-N-butylphthalate and 4200 μg/L of diethylphthalate were found in the Bldg. 2026 samples, 39 μg/L of di-N-butylphthalate was found in one of the ORR primary demineralizer regenerant samples, 61 μg/L of di-N-butylphthalate was found in one of the HFIR primary demineralizer regenerant samples, and 92 μg/L of the same organic was found in one of the tank WC-10 samples. No other detectable quantities of organics were seen in the analyses.

Table 16. Spark source spectrometry data on the LLW collection system samples

Constituent	Collection system sample (μg/mL)																
	WC-10		WC-13		WC-14		Bldg. 2026		Bldg. 3019	TRU aqueous		ORR primary		HFIR primary		PWTP	
	A	B	A	B	A	B	A	B		A	B	A	B	A	B	A	B
Aluminum	1	1	3	3	3	3	30	20	5	5	3	20	20	10	10	1	3
Boron	0.5	0.5	0.1	0.5	0.5	0.3	2	1	0.3	0.5	1	0.1	0.3	0.1	0.1	<0.1	1
Barium	1	1	0.5	1	1	1	2	3	*a*	2	2		0.3	0.3	0.1	50	50
Calcium	3	3	5	5	100	200	50	30	10	10	10	30	30	60	60	major	major
Cadmium	<1	<1	<1	<1	30	30	3	3	20	2	<1	20	30			<1	<1
Cobalt	<0.1	<0.1	<0.1	<0.1	1	1	0.3	0.3	<0.1	<0.1	<0.3	<0.1	0.1	1	1	3	3
Chromium	0.1	0.1	0.5	0.5	1	1	3	3	0.5	2	3	0.3	0.1	1	1	20	30
Chlorine	7	5	10	20	20	10	10	20	5	20	30	10	10	10	20	50	200
Copper	1	0.3	10	5	2	2	3	3	<1	1	3	1	3	1	0.3	10	10
Iron	3	3	2	2	5	5	50	50	5	2	5	5	10	3	3	100	100
Potassium	3	3	10	10	5	10	40	40	0.3	major	major	10	20	5	3	major	major
Magnesium	1	0.3	1	1	10	10	10	5	1	5	5	10	20	20	30	major	major
Manganese	<0.1	0.1	0.1	<0.1	1	1	1	1	0.1	<1	1	0.3	0.3	0.1	0.1	10	10
Molybdenum	<1	<1	<1	<1	<1	<1	<1	<1	<1	<3	<3	<1	<1	<1	<1	<1	<1
Sodium	major	major	major	major	major	major	major	major	3	major	major	major	major	40	60	major	major
Niobium									<1			<1	<1	<1	<1	<1	<1
Nickel	0.3	0.1	1	2	2	2	5	5	1	0.3	1	1	1	1	1	10	10
Phosphorus	0.3	0.1	1	2	1	1	30	30	0.3	5	10	10	1	5	3	5	10
Lead	<1	<1	<1	<1	<1	<1	3	3		<1	<1		0.3			<0.3	<0.3
Sulfer	10	10	10	20	100	100	100	100	3	10	10	10	10	200	400	50	100
Silicon	3	3	2	3	3	3	10	5	<3	<3	<3	<3	1	3	<1	10	10
Strontium	0.3	0.3	0.3	0.3	0.3	0.3	0.3	0.3		0.3	0.3		0.1		0.1	100	100
Thorium	<1	<1	2	<1	major	major	<1	<1		<1	<1						
Titanium									<1			3	1	1	1	1	1
Uranium	<1	<1	10	5	major	major	100	70		10	5					100	100
Vanadium	<0.1	<0.1	0.1	0.1	<0.1	<0.1	1	1	0.1	0.3	0.3	0.1	<0.1	0.1	0.1	1	1
Tungsten	<1	<1	<1	<1	<1	<1	5	5	5	<5	<5			10	5		
Yittrium													0.1		0.1		
Zinc	0.3	0.3	1	1	1	1	3	3	1	1	1	1	1	1	1	30	30
Zirconium	<1	<1	<1	<1	<1	<1	<1	<1	<1	<1	<1	<1	<1	1	<1	<1	<1

[a]A blank space indicates no data available.

SSMS data on the LLW collection system samples, along with the PWTP concentrate sample, are listed in Table 16. Again, a discussion of the accuracy of this semiquantitative technique is given in Chap. 3.

Although detailed radioisotope data are generally not available because sample volumes had been used up (particularly because of organic analyses), some isotopic data are available on the PWTP and TRU Facility samples. No significant quantities of radioisotopes were identified in the PWTP samples. However, data reported under request number 45342 show significant concentrations in the TRU Facility sample. Results obtained include

Gross alpha	2,500 nCi/mL	Cs-137	18,000 nCi/mL
Pu-238	24 nCi/mL	Ru-106	4,000 nCi/mL
Pu-239,240	38 nCi/mL	Sb-128	2,500 nCi/mL
Am-241	320 nCi/mL	Nb-95	350 nCi/mL

Because of the significance of TRUs in the LLW collection system, these data may indicate that the TRU Facility is a particularly important source of waste in the system. Note, however, that these results are based on a single sample and may not represent the average waste characteristics from the TRU Facility. Further sampling and analysis of this waste stream are recommended.

5. CONSISTENCY OF DATA

In the course of assembling data resulting from a diverse set of sampling activities — in many cases generated without the benefit of formal requests for specific analyses and procedures — questions arise as to whether the overall data set is self-consistent. In dealing with this data set in particular, several cases of omitting conversion factors or detector efficiency factors were discovered and corrected. Therefore, in an attempt to add credibility to the existing data, this chapter compares independent data that should give the same results and tries to either verify individual subsets of data or identify data that appear to be inconsistent with the rest of the set.

5.1 Data on Alpha Emitters

Gross alpha data were generated independently in the RMAL and TRU analytical laboratories. Independent radiochemical analyses of specific alpha-emitting isotopes were also conducted at the TRU Facility. By summing results for all of the significant alpha-emitting isotopes, a comparison of three independent measurements (Table 17) can be made. Relative standard deviations in the three sets of data fall within the expectation for these analyses.

5.2 Data on Beta Emitters

A similar comparison can be made by using independent determinations of gross beta-emitter concentrations from the RMAL and TRU laboratories and the sum of individual beta-emitting isotope concentrations measured in a variety of ways. Beta-emitter data on samples from the Melton Valley Storage Tanks are summarized in Table 18. Concentrations for Sr-90 are doubled in the summation to account for the daughter product Y-90, also a beta emitter, in equilibrium with Sr-90. A seemingly obvious error, in which an exponent is one order of magnitude too high, has been corrected in the TRU gross beta measurement for the W-27 November solids sample. Ratios comparing each of the three determinations against each other are also shown in Table 18.

Table 17. Comparison of alpha-emitter data from the Melton Valley Storage Tanks[a]

Tank	Sample date	Sample location	Gross alpha[b] TRU	Gross alpha[b] RMAL	Sum of actinides	Average	Standard deviation	Relative error (%)
W-24	July 85	Top[c]	18	21	19.9	19.6	1.2	6.3
	July 85	Middle[c]	38	35	35.9	36.3	1.3	3.5
	July 85	Bottom[c]	410	350	409	390	28	7.2
	July 85	Sludge[c]	2100	1000	2430	1843	611	33.2
	Nov. 85	Liquid[c]	14	32	*d*	23.0		
	Nov. 85	Solids[e]	1700	1100	935	1245	329	26.4
W-25	July 85	Top[c]	68	65	69.2	67.4	1.8	2.6
	July 85	Middle[c]	70	65	66.4	67.1	2.1	3.1
	July 85	Bottom[c]	1200	590	1340	1043	326	31.2
	July 85	Sludge[c]	1300	780	1750	1277	396	31.0
	Nov. 85	Liquid[c]	4	13		8.5		
	Nov. 85	Solids[e]	2600	2200	2620	2473	193	7.8
W-26	July 85	Top[c]	86	62	64.7	70.9	10.7	15.1
	July 85	Middle[c]	89	68	70.8	75.9	9.3	12.3
	July 85	Bottom[c]	128	105	114	116	9	8.2
	July 85	Sludge[c]	300	205	329	278	53	19.1
	Nov. 85	Liquid[c]	9	41		25.0		
	Nov. 85	Solids[e]	2600	1600	1040	1747	645	36.9
W-27	July 85	Top[c]	84	89	89.9	87.6	2.6	3.0
	July 85	Middle[c]	89	95	92.2	92.1	2.5	2.7
	July 85	Bottom[c]	260	220	234	238	17	7.0
	July 85	Sludge[c]	250	220	238	236	12	5.2
	Nov. 85	Liquid[c]	7	22		14.5		
	Nov. 85	Solids[e]	1400	1200	2120	1573	395	25.1
W-28	July 85	Top[c]	6	16	2.91	8.3	5.6	67.3
	July 85	Middle[c]	46	12	2.79	20.3	19	91.7
	July 85	Bottom[c]	460	1900	494	951	671	70.5
	July 85	Sludge[c]	540	1500	677	906	424	46.8
	Nov. 85	Liquid[c]	89	130		110		
	Nov. 85	Solids[e]	890	620	557	689	144	21.0
W-29	Nov. 85	Liquid[c]	4	7		3.7		
	Nov. 85	Solids[e]	6000	2200	4720	4307	1579	36.7
W-30	Nov. 85	Liquid[c]	5	5		5.0		
	Nov. 85	Solids[e]	380	290	372	347	40.7	11.7
W-31	Nov. 85	Solids[e]	3100	3000	3180	3093	74	2.4

[a]All data from the TRU laboratory except RMAL gross alpha.
[b]July RMAL data: Request No. 34380, received 7/1/85, completed 2/5/86.
July TRU data: Request No. 45298, received 7/22/85, completed 9/10/85.
Nov. RMAL data: Request No. 34523, received 11/7/85, completed 11/26/85.
Nov. TRU data: Request No. 45764, received 1/30/86, completed 2/6/86.
[c]nCi/mL for liquid samples.
[d]A blank space means no data available.
[e]nCi/g for solid samples.

Table 18. Comparison of beta-emitter data on the Melton Valley Storage Tanks[a]

Tank	Sample date	Sample location	Gross beta TRU	Gross beta RMAL	Sum of isotopes	Ratio TRU/RMAL	Ratio RMAL/Sum	Ratio TRU/Sum	Sr-90	Cs-137	Eu-152, 154,155	Co-60	Other isotopes
W-24	July 85	Top[b]	110,000	16,600	16,000	6.6	1.0	6.9	865	13,600	230	178	250
	July 85	Middle[b]	110,000	16,900	16,000	6.5	1.1	6.9	1,290	12,900	280	302	240
	July 85	Bottom[b]	390,000	57,800	36,000	6.7	1.6	10.8	9,430	15,400	900	624	160
	July 85	Sludge[b]	1,600,000	263,000	540,000	6.1	0.5	3.0	263,000	7,990	3,800	2,360	860
	Nov. 85	Liquid[b]	7,380	8,620	19,000	0.9	0.5	0.4	657	2,050	15,000	760	270
	Nov. 85	Solids[c]	187,000	170,000	160,000	1.1	1.1	1.2	76,000	1,680	2,100	1,580	680
W-25	July 85	Top[b]	81,000	11,600	12,000	7.0	1.0	6.8	2,430	6,400	170	94	180
	July 85	Middle[b]	79,000	11,700	12,000	6.8	1.0	6.6	2,780	6,260	170	98	83
	July 85	Bottom[b]	1,600,000	144,000	120,000	11.1	1.2	13.3	55,700	2,610	4,100	1,590	640
	July 85	Sludge[b]	1,000,000	169,000	490,000	5.9	0.3	2.0	238,000	5,290	5,500	2,130	890
	Nov. 85	Liquid[b]	3,430	3,410	2,100	1.0	1.6	1.6	789	540	[d]		
	Nov. 85	Solids[c]	414,000	365,000	340,000	1.1	1.1	1.2	162,000	7,810	2,600	1,360	
W-26	July 85	Top[b]	100,000	15,000	7,200	6.7	2.1	13.9	1,320	2,730	680	319	870
	July 85	Middle[b]	110,000	14,900	7,100	7.4	2.1	15.5	1,260	2,750	660	319	880
	July 85	Bottom[b]	130,000	16,900	17,000	7.7	1.0	7.6	6,000	2,750	750	370	800
	July 85	Sludge[b]	160,000	23,300	22,000	6.9	1.1	7.3	8,160	3,000	1,100	540	790
	Nov. 85	Liquid[b]	10,100	9,840	9,300	1.0	1.1	1.1	4,410	390	20	20	
	Nov. 85	Solids[c]	179,000	181,000	160,000	1.0	1.1	1.1	80,300	880	1,000	1,470	50
W-27	July 85	Top[b]	100,000	15,600	15,000	6.4	1.0	6.7	1,350	11,700	380	234	320
	July 85	Middle[b]	110,000	15,800	16,000	7.0	1.0	6.9	1,390	12,200	450	264	370
	July 85	Bottom[b]	150,000	21,600	21,000	6.9	1.0	7.1	3,620	12,000	770	419	540
	July 85	Sludge[b]	140,000	21,900	22,000	6.4	1.0	6.4	3,780	12,100	880	446	680
	Nov. 85	Liquid[b]	7,160	6,920	4,800	1.0	1.4	1.5	2,140	500		10	
	Nov. 85	Solids[c]	140,000[e]	126,000	110,000	1.1	1.1	1.3	53,000	3,000	1,200	3,030	
W-28	July 85	Top[b]	45,000	6,920	6,700	6.5	1.0	6.7	1,950	2,370		16	450
	July 85	Middle[b]	47,000	7,350	7,000	6.4	1.1	6.7	2,000	2,450		21	480
	July 85	Bottom[b]	110,000	17,600	15,000	6.3	1.2	7.3	3,620	2,450	1,600	1,360	2,000
	July 85	Sludge[b]	130,000	20,200	17,000	6.4	1.2	7.6	4,110	2,390	2,200	1,750	2,800
	Nov. 85	Liquid[b]	8,490	10,100	8,000	0.8	1.3	1.1	3,650	250	440	30	20
	Nov. 85	Solids[c]	23,600	20,500	21,000	1.2	1.0	1.1	5,700	840	3,500	2,180	980
W-29	Nov. 85	Liquid[b]	2,320	2,120	530	1.1	4.0	4.4	59	380		30	
	Nov. 85	Solids[c]	43,000	35,400	36,000	1.2	1.0	1.2	12,300	1,650	8,300	1,160	100
W-30	Nov. 85	Liquid[b]	1,150	981	670	1.2	1.5	1.7	284	100			
	Nov. 85	Solids[c]	53,200	45,700	41,000	1.2	1.1	1.3	20,000	480	20		
W-31	Nov. 85	Solids[c]	403,000	422,000	410,000	1.0	1.0	1.0	201,000	3,840	1,300	1,230	
	July data averages:					6.9	1.1	7.8					
	November data averages:					1.1	1.3	1.4					

[a]Data references given in Table 6.
[b]nCi/mL for liquid samples.
[c]nCi/g for solid samples.
[d]A blank space means no data available.
[e]November solids data from TRU lab for W-27 reset to 140,000 from 1,400,000.

Much of the data in Table 18 is in reasonable agreement among the three equivalent columns. A consistent level of agreement is obtained between the RMAL gross beta measurements and the "sum of isotopes" column. November TRU gross beta measurements are also generally in agreement with the other two columns. However, TRU gross beta measurements of the July samples appear to carry a systematic error in comparison with the other two columns. This column differs from the RMAL gross beta measurement (which, unlike the "sum of isotopes" column, should be exactly the same) by an average factor of 6.9. Because this apparent systematic error appears in one of three independent measurements and appears only in data associated with the July samples, it would seem reasonable to assume that the error is, in fact, in the TRU gross beta measurement. Table 19 presents the same comparison of data, with the July TRU gross beta data normalized by the observed factor of 6.9. The three columns are now generally in good agreement with each other.

With general consistency in the beta-emitter data achieved, specific anomalies can be addressed. The focus is directed toward data represented by the three columns in Table 19 that do not agree within 20% (i.e., the ratios are <0.8 or >1.2). One such deviation occurs in the July sludge sample for W-24. Although the normalized TRU gross beta data are in agreement with the RMAL data, the "sum of isotopes" value is about double these two. Because the Sr-90 (and Y-90) value dominates in the summation, it is the analysis that appears questionable. The same holds true for data on the July sludge sample from W-25. The Sr-90 value appears questionable in this sample as well. A very similar deviation in the three major columns is observed in the November liquid sample data for W-24. Again, the summation appears inconsistent with the TRU and RMAL gross beta data. In this case, gamma scan data dominate the summation. The 15,000-nCi/mL value for the europium concentrations appears totally inconsistent with the rest of the data and should be considered suspect. The other data obtained in the gamma scan (including Cs-137 and Co-60) may also be suspect. In the July sample from W-25, the normalized TRU gross beta measurement appears high in relation to the RMAL gross beta and "sum of isotopes" data. The "sum of isotopes" value for the W-24 July bottom sample is low in comparison with the gross beta values,

Table 19. Comparison of normalized beta-emitter data on the Melton Valley Storage Tanks[a]

Tank	Sample date	Sample location	Gross beta TRU	Gross beta RMAL	Sum of isotopes	Ratio TRU/RMAL	Ratio RMAL/Sum	Ratio TRU/Sum	Sr-90[b]	Cs-137	Eu-152 154,155	Co-60	Other isotopes
W-24	July 85	Top[c]	16,000	16,000	16,000	1.0	1.0	1.0	865	13,600	230	178	250
	July 85	Middle[c]	16,000	16,900	16,000	0.9	1.1	1.0	1,290	12,900	280	302	240
	July 85	Bottom[c]	57,000	57,800	36,000	1.0	1.6	1.6	9,430	15,400	900	624	160
	July 85	Sludge[c]	230,000	263,000	540,000	0.9	0.5	0.4	263,000	7,990	3,800	2,360	860
	Nov. 85	Liquid[c]	7,400	8,620	19,000	0.9	0.5	0.4	657	2,050	15,000	760	270
	Nov. 85	Solids[d]	190,000	170,000	160,000	1.1	1.1	1.2	76,000	1,680	2,100	1,580	680
W-25	July 85	Top[c]	12,000	11,600	12,000	1.0	1.0	1.0	2,430	6,400	170	94	180
	July 85	Middle[c]	11,000	11,700	12,000	0.9	1.0	0.9	2,780	6,260	170	98	83
	July 85	Bottom[c]	230,000	144,000	120,000	1.6	1.2	1.9	55,700	2,610	4,100	1,590	640
	July 85	Sludge[c]	150,000	169,000	490,000	0.9	0.3	0.3	238,000	5,290	5,500	2,130	890
	Nov. 85	Liquid[c]	3,400	3,410	2,100	1.0	1.6	1.6	789	540			
	Nov. 85	Solids[d]	410,000	365,000	340,000	1.1	1.1	1.2	162,000	7,810	2,600	1,360	
W-26	July 85	Top[c]	15,000	15,000	7,200	1.0	2.1	2.1	1,320	2,730	680	319	870
	July 85	Middle[c]	16,000	14,900	7,100	1.1	2.1	2.3	1,260	2,750	660	319	880
	July 85	Bottom[c]	19,000	16,900	17,000	1.1	1.0	1.1	6,000	2,750	750	370	800
	July 85	Sludge[c]	23,000	23,300	22,000	1.0	1.1	1.0	8,160	3,000	1,100	540	790
	Nov. 85	Liquid[c]	10,000	9,840	9,300	1.0	1.1	1.1	4,410	390	20	20	
	Nov. 85	Solids[d]	180,000	181,000	160,000	1.0	1.1	1.1	80,300	880	1,000	1,470	50
W-27	July 85	Top[c]	15,000	15,600	15,000	1.0	1.0	1.0	1,350	11,700	380	234	320
	July 85	Middle[c]	16,000	15,800	16,000	1.0	1.0	1.0	1,390	12,200	450	264	370
	July 85	Bottom[c]	22,000	21,600	21,000	1.0	1.0	1.0	3,620	12,000	770	419	540
	July 85	Sludge[c]	20,000	21,900	22,000	0.9	1.0	0.9	3,780	12,100	880	446	680
	Nov. 85	Liquid[c]	7,200	6,920	4,800	1.0	1.4	1.5	2,140	500		10	
	Nov. 85	Solids[d]	140,000[e]	126,000	110,000	1.1	1.1	1.3	53,000	3,000	1,200	3,030	
W-28	July 85	Top[c]	6,500	6,920	6,700	0.9	1.0	1.0	1,950	2,370		16	450
	July 85	Middle[c]	6,800	7,350	7,000	0.9	1.1	1.0	2,000	2,450		21	480
	July 85	Bottom[c]	16,000	17,600	15,000	0.9	1.2	1.1	3,620	2,450	1,600	1,360	2,000
	July 85	Sludge[c]	19,000	20,200	17,000	0.9	1.2	1.1	4,110	2,390	2,200	1,750	2,800
	Nov. 85	Liquid[c]	8,500	10,100	8,000	0.8	1.3	1.1	3,650	250	440	30	20
	Nov. 85	Solids[d]	24,000	20,500	21,000	1.2	1.0	1.1	5,700	840	5,500	2,180	980
W-29	Nov. 85	Liquid[c]	2,300	2,120	530	1.1	4.0	4.3	59	380		30	
	Nov. 85	Solids[d]	43,000	35,400	36,000	1.2	1.0	1.2	12,300	1,650	8,300	1,160	100
W-30	Nov. 85	Liquid[c]	1,200	981	670	1.2	1.5	1.8	284	100			
	Nov. 85	Solids[d]	53,000	45,700	41,000	1.2	1.1	1.3	20,000	480	20		
W-31	Nov. 85	Solids[d]	400,000	422,000	410,000	0.9	1.0	1.0	201,000	3,840	1,300	1,230	
July data averages:						1.0	1.1	1.1					
November data averages:						1.1	1.3	1.4					

[a]Data references given in Table 6. Gross beta data from TRU lab divided by 6.88.
[b]Values for Sr-90 doubled in summation to account for decay of Y-90 daughter.
[c]nCi/mL for liquid samples.
[d]Ci/g for solid samples.
[e]November solids data from TRU lab for W-27 reset to 140,000 from 1,400,000.

apparently because of a low value for Sr-90. All data considered suspicious in the above discussion are underlined in Table 19.

In several cases, the "sum of isotopes" value is less than the two gross beta measurements; the total beta concentration, however, is small, and the data on individual isotopes are sparse. In these cases, a ratio of the gross beta measurements to the "sum of isotopes" is not really considered an indicator of error. November liquid data for W-25, W-27, W-29, and W-30 fall into this category. Also, neither a relative error of slightly more than 20% between TRU and RMAL gross beta measurements on the W-28 November liquid sample nor the deviation in the W-30 November solids or the W-27 November solids data (although the total count rate is relatively high in the latter case) is considered significant. Low values are observed for the "sum of isotopes" data on July samples from the top and middle of W-26. Again, the total count observed is moderate, and these do not appear to reflect major inconsistencies in the data.

Because one of the major uses of data on beta emitters is to calculate anticipated dose rates for proposed processing and disposal methods and because Sr-90 (and Y-90) often dominates the "sum of isotopes" column in Tables 18 and 19 but does not contribute to the external gamma dose, it would be desirable to further verify the consistency of data on the gamma-emitting isotopes. Note, however, that in many of the liquid samples, the "sum of isotopes" column in the beta-emitter comparisons is actually dominated by Cs-137 and the other gamma-emitting isotopes and that Tables 18 and 19 do provide some verification of data used in dose rate calculations. However, the highest dose rates would be observed in handling solids and slurries, and it is these samples where the Sr-90 data obscure the verification of gamma emitters using gross beta data.

Table 20 presents a comparison of the gross gamma measurement with the sum of isotopes identified in the gamma scan by using a multichannel analyzer. In this case, only two columns can be generated for comparison, and both are based on data from the TRU analytical laboratory. In addition, the gross gamma measurement required assumptions to calculate the efficiency of the detector and also involved selecting cutoff energies for discrimination of noise in the measurement. Thus, the gross

Table 20. Comparison of gamma-emitter data on the Melton Valley Storage Tanks[a]

Tank	Sample date	Sample location	Gross gamma	Sum of gammas	Sum/gross[b]	Cs-137 (85%)	Cs-134 (100%)	Co-60 (100%)	Eu-152 (100%)	Eu-154 (100%)	Eu-155 (52%)	Zr-95 (100%)	Ru-106 (34%)
W-24	July 85	Top[c]	1,100	12,000	10.9	13,600	60.8	178	132	82.9	13.9	40.5	132
	July 85	Middle[c]	720	12,000	16.7	12,900	55.4	302	217	13	48.9	57.2	105
	July 85	Bottom[c]	2,800	15,000	5.4	15,400	<1.5	624	464	324	111	136	<3
	July 85	Sludge[c]	5,400	13,000	2.4	7,990	<1.5	2,360	1,910	1,390	483	599	238
	Nov. 85	Liquid[c]	1,300	17,000	13.1	2,050	[d]	760	13,000		2,240		
	Nov. 85	Solids[e]	2,000	5,400	2.7	1,680		1,580	N.D.[f]	1,440	610	640	
W-25	July 85	Top[c]	1,200	5,800	4.8	6,400	47.8	93.7	93.2	60.8	11.6	23.5	98
	July 85	Middle[c]	1,200	5,600	4.7	6,260	44.3	98.3	73.4	79.9	16.5	24.3	<3
	July 85	Bottom[c]	2,000	8,300	4.2	2,610	N.D.	1,590	2,240	1,270	599	629	<3
	July 85	Sludge[c]	3,000	13,000	4.3	5,290	N.D.	2,130	2,840	1,910	702	878	N.D.
	Nov. 85	Liquid[c]	490	460	0.9	540			N.D.				
	Nov. 85	Solids[e]	3,600	10,000	2.8	7,810		1,360	1,170	1,060	320	N.D.	
W-26	July 85	Top[c]	800	3,700	4.6	2,730	83.7	319	392	201	86.4	99.6	678
	July 85	Middle[c]	840	3,700	4.4	2,750	105	319	400	177	84	93.2	680
	July 85	Bottom[c]	910	3,800	4.2	2,750	85.1	370	424	228	95	110	602
	July 85	Sludge[c]	1,100	4,600	4.2	3,000	75.6	540	610	356	134	209	502
	Nov. 85	Liquid[c]	410	370	0.9	390		20	20				
	Nov. 85	Solids[e]	1,200	3,100	2.6	880		1,470	800	N.D.	240	N.D.	
W-27	July 85	Top[c]	2,400	11,000	4.6	11,700	57	234	198	143	39.2	64.8	185
	July 85	Middle[c]	2,400	11,000	4.6	12,200	66.7	264	251	136	58.1	57	235
	July 85	Bottom[c]	2,600	12,000	4.6	12,000	70.7	419	473	292	N.D.	123	335
	July 85	Sludge[c]	2,600	12,000	4.6	12,100	53.7	446	473	292	111	117	497
	Nov. 85	Liquid[c]	540	440	0.8	500		10					
	Nov. 85	Solids[e]	2,100	6,700	3.2	3,000		3,030	1,010	N.D.	180	N.D.	
W-28	July 85	Top[c]	540	2,300	4.3	2,370	230	16.2	N.D.	N.D.	N.D.	N.D.	212
	July 85	Middle[c]	550	2,400	4.4	2,450	244	20.5	N.D.	N.D.	N.D.	N.D.	226
	July 85	Bottom[c]	1,500	6,000	4.0	2,450	232	1,360	923	516	197	235	1,570
	July 85	Sludge[c]	1,900	7,200	3.8	2,390	254	1,750	1,190	756	247	316	2,200
	Nov. 85	Liquid[c]	910	700	0.8	250		30	300	140		20	
	Nov. 85	Solids[e]	2,100	9,000	4.3	840		2,180	3,030	1,760	690	920	
W-29	Nov. 85	Liquid[c]	440	350	0.8	380		30					
	Nov. 85	Solids[e]	2,600	10,000	3.8	1,650		1,160	4,590	2,840	860	N.D.	
W-30	Nov. 85	Liquid[c]	110	85	0.8	100		<10					
	Nov. 85	Solids[e]	200	420	2.1	480		N.D.	N.D.	N.D.	20	N.D.	
W-31	Nov. 85	Solids[e]	1,600	5,800	3.6	3,840		1,230	550	700	50	N.D.	

[a]Data references given in Table 6. Overall gamma yields shown under isotope names.
[b]Average values of the "sum of nuclides" to "gross gamma" ratio:
July sampling data (W-24 data excluded): 4.4
November liquid data (W-24 data excluded): 0.83
November solids data (all data included): 3.1
[c]nCi/mL for liquid samples.
[d]A blank space means no data available.
[e]nCi/g for solid samples.
[f]"N.D." means not detected in gamma scan.

gamma measurement is not considered by ACD to be a quantitative measurement. Gross gamma data are reported by using correction factors based on the gamma energy of Cs-137. This assumption was used in translating count-per-minute data to nanocuries in Table 20. According to D. A. Costanzo, one should expect the gross gamma value to be higher than a summation of gamma scan data. However, the opposite is observed in Table 20.

The degree of consistency between the gross gamma data and the sum of gamma scan data on individual isotopes (corrected for the relative intensity of the gamma emission) is relatively poor. In comparing only two columns, three groups of ratios appear. The July data are off by the highest ratio, analogous to the discrepancy of the TRU gross beta data (note, however, that the ratio in comparing gamma data is the inverse of the ratio used in Tables 18 and 19). However, the November data appear to fall into two distinct groups, with one trend for data on liquid samples and another for data on the solids. Because no "two-out-of-three" logic is available to select which column to correct, a table of normalized gamma data is not presented here. (A table in which gross gamma data were normalized by using the factors calculated in Table 20 was created but generated no information not already available from the beta data comparisons.)

Tables 21 and 22 present comparisons of gross beta and gross gamma data on samples from the Evaporator Service Tanks. Because all the gross beta data come from analyses of November samples, no corrections were required. No substantial problems with the beta-emitter data are identified in Table 21, although the "sum of isotopes" value is consistently lower than either gross beta measurement. This may be the result of decay of different isotopes than those covered in the gamma scans and radiochemical analyses. Comparison of gross gamma data with the sum of isotopes identified in the gamma scan provides even poorer correlation than in the case of the Melton Valley Storage Tanks data and is not considered useful for verification of data.

In summary, the beta-emitter data, especially data on the gamma emitters present in relatively low concentrations, are not totally self-consistent. The largest discrepancy comes from the comparison of gross

Table 21. Comparison of beta-emitter data on the Evaporator Service Tanks[a]

Tank	Sample date	Sample location	Gross beta		Sum of isotopes	Ratio TRU/RMAL	Ratio RMAL/Sum	Ratio TRU/Sum	Sr-90[b]	Cs-137	Eu-152, 154,155	Co-60	Other isotopes
			TRU	RMAL									
W-21	Nov. 85	Solids[c]	84,900	68,300	64,000	1.2	1.1	1.3	16,400	6,760	11,000	1,060	47,000
W-22	Nov. 85	Solids[c]	56,500	53,700	48,000	1.1	1.1	1.2	10,200	5,050	10,000	740	39,000
W-23	Nov. 85	Liquid[d]	66,800	49,800	37,000	1.3	1.3	1.8	9,400	2,040	2,300	760	28,000
	Nov. 85	Solids[c]	237,000	205,000	180,000	1.2	1.1	1.3	73,700	6,510	14,000	880	110,000
	November data averages					1.2	1.2	1.4					

[a]Data references given in Table 11.
[b]Values for Sr-90 doubled in summation to account for decay of Y-90 daughter.
[c]nCi/g for solid samples.
[d]nCi/mL for liquid samples.

Table 22. Comparison of gamma-emitter data on the Evaporator Service Tanks[a]

Tank	Sample date	Sample location	Gross gamma	Sum of gammas	Sum/gross[b]	Cs-137 (85%)	Co-60 (100%)	Eu-152 (100%)	Eu-154 (100%)	Eu-155 (52%)	Zr-95 (100%)	Nb-95 (100%)
W-21	Nov. 85	Solids[c]	6,700	28,354	4.2	6,760	1,060	11,600	5,840	2,400	2,660	200
W-22	Nov. 85	Solids[c]	5,300	25,604	4.8	5,050	740	10,900	5,350	2,060	2,920	330
W-23	Nov. 85	Liquid[d]	5,600	16,864	3.0	2,040	760	13,000	[e]	2,250		200
	Nov. 85	Solids[c]	6,100	31,460	5.2	6,510	880	12,100	8,220	2,550	3,400	

[a]Data references given in Table 11. Overall gamma yields shown under isotope names.
[b]Average values of the "sum of nuclides" to "gross gamma" ratio:
November liquid data: 3.0
November solids data: 4.7
[c]nCi/g for solid samples.
[d]nCi/mL for liquid samples.
[e]A blank space means no data available.

gamma data with gamma scan data. ACD personnel generally do not consider gross gamma data to be quantitative and do not feel this comparison should lead to rejection of the data. If a correction is made to gross beta analyses of July samples made at the TRU laboratory, the total set of beta-emitter data appears to be reasonably consistent. Specific cases of questionable data are highlighted in Table 19.

5.3 Data on Chemical Composition

Generally, little opportunity was available for comparisons of data on the chemical composition of the samples analyzed. In some cases, samples were split, and duplicate analyses were conducted. This approach was reflected in much of the LLW source tank and facility data and was recorded in Tables 13, 14, and 16. A completely independent comparison of chemical composition data on July middle samples from Melton Valley tanks W-24 through W-28 can be made by using the results of ICP analyses and SSMS analyses (Table 23). Because the SSMS technique is regarded as semiquantitative and many of the ICP (and SSMS) results are near the detection limits, an exact correlation cannot be expected. General trends are consistent, however, and data for which large concentrations could be observed by using both methods (such as nitrates) do appear to be in good agreement.

5.4 Other Data

For most of the data, only one analysis was made, and the various QA procedures of the personnel collecting the samples, conducting analyses, and reporting results must be relied upon.

Table 23. Comparison of ICP and SSMS data on the Melton Valley Storage Tanks[a]

Constituent	Storage tanks data (μg/mL)									
	W-24 M		W-25 M		W-26 M		W-27 M		W-28 M	
	ICP	Spark source	ICP	Spark source	ICP	Spark source	ICP	Spark source	ICP	Spark source
Sodium	120,000	Major	83,000	Major	79,000	Major	53,000	Major	82,000	Major
Potassium	b	5,000		5,000		Major		5,000		9,000
Calcium	<30	2,000	<30	500	14,000	Major	<30	2,000	5,100	3,000
Magnesium	<75	300	<75	100	1,200	700	<75	600	220	100
Silicon	160	30	90	50	<30	10	68	20	<30	10
Lithium	150		61		75		60		90	
Zinc	55	20	50	10	31	30	13	50	6.2	10
Phosphorus	<45	20	<45	100	<45	100	52	600	<45	5
Aluminum	<30	40	41	200	<30	600	<30	600	<30	10
Strontium	<0.75	5	<0.75	5	35	30	<0.75	5	22	20
Copper	14	<10	11	5	23	<3	10	<10	3.4	10
Barium (100)[c]	<3.0	40	<3.0	30	8	100	<3.0	100	8.5	10
Chromium (5)[c]	<6.0	5	<6.0	10	<6.0	10	6.3	20	<6.0	3
Cadmium (1)[c]	<0.75		<0.75		<0.75		1.4		<0.75	
Silver (5)[c]	<7.5		<7.5		<7.5		<7.5		<7.5	
Arsenic (5)[c]	<15		<15		<15		<15		<15	
Boron	<12	500	<12	100	<12	700	<12	500	<12	10
Beryllium	<0.30		<0.30		<0.30		<0.30		<0.30	
Cobalt	<1.5	<3	<1.5	3	<1.5	1	<1.5	10	<1.5	<1
Iron	<4.5	50	<4.5	50	<4.5	100	<4.5	200	<4.5	20
Gallium	<45		<45		<45		<45		<45	
Hafnium	<6.0		<6.0		<6.0		<6.0		<6.0	
Manganese	<0.75	5	<0.75	5	<0.75	10	<0.75	10	<0.75	<1
Molybdenum	<6.0	<3	<6.0	<5	<6.0	<3	<6.0	<3	<6.0	<3
Nickel	<9.0	10	<9.0	5	<9.0	20	<9.0	20	<9.0	30
Lead (5)[c]	<30	10	<30	<10	<30	<5	<30	<10	<30	<3
Antimony	<30		<30		<30		<30		<30	
Selenium (1)[c]	<30		<30		<30		<30		<30	
Titanium	<3.0	5	<3.0	10	<3.0	30	<3.0	10	<3.0	<10
Vanadium	<1.5	3	<1.5	5	<1.5	5	<1.5	5	<1.5	3
Zirconium	<3.0	<3	<3.0	<1	<3.0	<3	<3.0	<3	<3.0	<3
Bismuth		10		<3		<5		<5		<3
Cerium		<3				<3		<3		<3
Lanthanum		<1		<10		<1		<1		<1
Sulfur		200		200		100		500		100
Thorium		100				200		300		<10
Tungsten				<30						
Uranium		300				>1,000		>2,000		<30
Nitrate	240,000	260,000	180,000	210,000	260,000	330,000	89,000	130,000	200,000	320,000
Chloride	4,100	3,500	2,900	2,200	2,900	2,400	2,700		2,900	
Sulfate		<1,000		1,200		<1,000		2,000		<1,000

[a]Data references given in Tables 8 and 9; all data from July sampling.
[b]A blank space means no data available.
[c]EP toxicity levels follow constituent names in parentheses.

6. EVALUATION OF DATA

6.1 Overall Trends

The LLW system at ORNL has been a system under change throughout the 1980s. The old Gunite Storage Tanks have been essentially emptied, a larger volume of waste was injected through hydrofracture in 2 years than in all previous years, and now operation of that facility has once again been halted. Volume reduction efforts have changed the characteristics of LLW, as have shifts in programs at ORNL. The return of the precipitator/clarifier to the PWTP, along with parallel zeolite columns, has removed the largest source of sodium nitrate and other salts from the LLW system. These modifications are allowing higher evaporation ratios in the LLW evaporators than have ever been experienced. These evaporation ratios, along with less diluted sources as a result of volume reduction efforts, are creating LLW concentrates with activity concentrations well above operating experience in the past decade, although the full impact of these changes is yet to be characterized.

A secondary observation is the difficulty in obtaining good analyses of random samples. An iterative process in which both the analytical chemist can learn what techniques will provide adequate data and the requester can learn what results can serve the system evaluation is needed. Many gaps, especially in the chemical analysis of radioactive samples, still exist.

6.2 TRU Concentrations

The key criterion for classification as "TRU-waste" is concentrations of transuranic alpha emitters with half-lives >30 years. The isotope U-233 has been both included and excluded over the years; for conservatism it has been included in these evaluations. Curium-244 has a half-life of 18 years and, thus, does not fall into the TRU-waste definition. Rigorously, an analysis should be made of the peak concentrations over time of the daughter product Pu-240, along with daughter products of decay of other isotopes. This has not been done here; the inclusion of U-233 and the exclusion of Cm-244 are somewhat offsetting.

Tables 24 and 25 present evaluations of the TRU-waste characteristics of the Melton Valley Storage Tanks and the Evaporator Service Tanks, based on the July and November samplings, respectively. Data in Table 24, all based on pumped liquid samples, are reasonably consistent. On the average, the TRU-waste isotopes represent 22% of the gross alpha activity. In the November data in Table 25, however, the solids samples show significant deviations, and TRU-waste isotopes compose a higher percentage of the gross alpha activity. The highest concentrations of TRU-waste isotopes were found in the solids from W-29 and the evaporator concentrate tank, W-23. These samples contained 1200 nCi/g of TRU-waste isotopes in the November analyses. All of the samples of solids exceeded 100 nCi/g. Likewise, all of the liquid samples taken from the upper regions of the tanks in July had TRU-waste isotope concentrations under 100 nCi/mL, with some near 1 nCi/g. In fact, the gross alpha concentrations in the November samples were so low that radiochemical analyses of the individual isotopes were not attempted. The indications that TRU-waste material is primarily in the solid phase are supported further by the centrifuge experiment requested by D. E. Ferguson and the filtering experiments by V. L. Fowler. In both cases, nearly all of the TRU-waste isotopes were removed from liquid waste samples by conducting a solid-liquid separation. The one exception is the November liquid sample taken from the evaporator concentrate tank W-23. Radiochemical analyses of the individual isotopes were completed for this liquid sample, and concentrations of TRU-waste isotopes totalled 230 nCi/g.

6.3 Penetrating Radiation

Concentrations of beta-gamma emitters are needed for both evaluations of penetrating radiation and documentation of activity present in the waste stored. Generally, the beta emitter found in the highest concentrations in the 50,000-gal tanks was the "pure" beta emitter Sr-90. Strontium concentrations were highest in the sludge phase. The second most concentrated isotope in many of the tanks was Cs-137; the highest concentrations often appeared in the liquid phase. However, concentrations of Co-60 and the europium isotopes were as high or higher in some

Table 24. Analysis of transuranic constituents in the Melton Valley Storage Tanks[a,b]

Tank	Sample location	Transuranic constituent (nCi/mL)								
		Gross alpha	Cm-244	Am-241	Pu-239 & Pu-240	Pu-238	U-233	Sum of "TRU-waste" isotopes	Sum of alpha isotopes	"TRU-waste" (%)
W-24	Top	18	15	0.2	1.4	2.3	1.0	4.9	20	24
	Middle	38	26	2.4	2.6	3.1	1.8	9.9	36	28
	Bottom	410	290	13	60	36	9.5	119	409	29
	Sludge	2100	1900	70	170	250	41	531	2431	22
W-25	Top	68	51	5.4	4.1	7.8	0.9	18.2	69	26
	Middle	70	49	5.4	3.9	7.1	1.0	17.4	66	26
	Bottom	1200	1100	100	6.9	10	120	237	1337	18
	Sludge	1300	1400	100	100	130	22	352	1752	20
W-26	Top	86	49	4.4	4.2	3.6	3.5	15.7	65	24
	Middle	89	54	4.9	4.8	3.9	3.2	16.8	71	24
	Bottom	128	91	3.3	6	9.4	4.7	23	114	20
	Sludge	300	210	15	32	55	17	119	329	36
W-27	Top	84	74	4.2	3.1	6.3	2.3	15.9	90	18
	Middle	89	75	5.8	3.1	6.3	2.0	17.2	92	19
	Bottom	260	190	19	8.4	13	3.8	44.2	234	19
	Sludge	250	190	18	9.5	16	4.9	48.4	238	20
W-28	Top	6	2.2	c	0.2	0.4	0.2	0.7	2.9	24
	Middle	46	2.1	c	0.2	0.3	0.2	0.7	2.8	25
	Bottom	460	430	8.9	9.1	29	17	64	494	13
	Sludge	540	590	16	13	34	24	87	677	13
									Average:	22

[a]All data from the TRU laboratory; all data from July sampling.
[b]Request No. 45298, received 7/22/85, completed 9/10/85.
[c]No data available.

Table 25. Analysis of transuranic constituents in the Melton Valley Storage Tanks and the Evaporator Service Tanks[a,b]

Tank	Sample type (liquid units) (solid units)	Gross alpha (nCi/mL) (nCi/g)	Cm-244 (nCi/mL) (nCi/g)	Am-241 (nCi/mL) (nCi/g)	Pu-238 (nCi/mL) (nCi/g)	Pu-239 (nCi/mL) (nCi/g)	U-233 (nCi/mL) (nCi/g)	Sum of "TRU" isotopes (nCi/g)	Sum of alpha isotopes	"TRU" (%)	"TRU" as 22% of gross alpha
W-21[c]	Solid	5110	810	70	830	380	50	1300	2100	[d]	1100
W-22[c]	Solid	3510	1100	100	280	190	58	630	1700		770
W-23[c]	Liquid	870	280	50	90	50	38	230	510		190
W-23[c]	Solid	6970	2190	<30	500	580	130	1200	3400		1500
W-24	Liquid	14									3.1
W-24	Solid	1700	280	230	210	190	25	660	940	70	370
W-25	Liquid	4									0.88
W-25	Solid	2600	1800	310	320	170	73	870	2600	33	570
W-26	Liquid	9									2.0
W-26	Solid	2600	350	190	190	250	60	690	1000	66	570
W-27	Liquid	7									1.5
W-27	Solid	1400	1600	220	90	200	43	550	2100	26	310
W-28	Liquid	89									20
W-28	Solid	890	300	100	60	50	47	260	560	46	200
W-29	Liquid	4									0.88
W-29	Solid	6000	3600	470	390	220	74	1200	4700	24	1300
W-30	Liquid	5									1.1
W-30	Solid	380	100	80	20	160	12	270	370	73	84
W-31	Solid	3100	2400	340	230	200	61	830	3200	26	680

[a]All data from the TRU laboratory; all data from November sampling.
[b]Request No. 45764, received 1/30/86, completed 2/6/86.
[c]Evaporator service tank; all others Melton Valley storage tanks.
[d]A blank space means no data available.

tanks, and the higher energy gammas associated with decay of these isotopes mean that they contribute significantly more to the penetrating radiation dose than Cs-137. Ruthenium-106 and Zr-95 were also found in significant concentrations in some of the tanks. The relatively short half-lives of these isotopes (<1 year) make them a concern for near-term handling and processing but less of a concern for long-term storage.

Some of the highest concentrations of the europium isotopes were found in W-23. This probably is a result of a major effort to separate Gd-153 in the isotope area. The isotopes Eu-152, Eu-154, and Eu-155 do not have particularly long half-lives (ranging from 5 to 14 years), but they will not decay appreciably in the time during which processing is likely to take place.

Less data are available on concentrations of beta-gamma emitters in the source samples partly because the diluted concentrations make analyses difficult. Strontium-90 data do exist (reported in Table 14 in Chap. 4), and the highest concentrations are seen in samples from Bldg. 2026 and the TRU Facility.

6.4 Chemical Composition

Wastes stored in the Melton Valley tanks contain essentially a high pH sodium nitrate salt solution, with smaller concentrations of the calcium and magnesium cations, and the chloride, phosphate, and sulfate anions. For example, the midliquid July sample from W-24 contained 0.12 g/mL of sodium and 0.24 g/mL of nitrate, accounting for 28.3 wt % of the solution (specific gravity of 1.27). On a molar basis, W-24 contains 5.2 mol/L of sodium and 3.9 mol/L of nitrate. Liquid samples from W-25 through W-28 are similar, although some are slightly less concentrated. No chemical analyses of the solids samples are available.

Concentrate from the PWTP evaporator contains an even higher loading of sodium nitrate, along with significant concentrations of calcium nitrate. This results from the practice of regenerating the columns (which had been loaded with significant concentrations of calcium) with nitric acid and then neutralizing the evaporated regenerant with NaOH.

Chemical analyses of the source tanks and facilities are again sparse because of the low concentrations of chemicals present and the need to dilute them before analysis in the ICP laboratory.

6.5 RCRA Evaluation

Additional criteria for facility designs and disposal methods, along with formal permitting requirements, are applied by EPA and the State of Tennessee if the LLW is classified "hazardous" under the RCRA. In particular, if shallow land burial is pursued, the law requires that the wastes be tested and declared nonhazardous. Tests currently required under RCRA cover toxicity, reactivity, corrosivity, and ignitability.

Test requirements are described in EPA-SW-846, *Test Methods for Evaluating Solid Waste*, Office of Solid Waste and Emergency Response, July 1982. Toxicity is established if any of 14 specified chemical constituents exceed allowable levels (Table 26). The entire test is described in SW-846 (Method 1310). If a sample contains <0.5% solids, it is analyzed directly. Samples containing >0.5% solids are subjected to an extraction of the solids before analysis. Reactivity, corrosivity, and ignitability tests are not rigorous at this time. Present forms of those tests are described in SW-846, but more explicit test methods are under development.

According to 40CFR261.22, aqueous wastes are classified as corrosive under RCRA if the pH is <2 or >12.5. The latter corresponds to a hydroxide ion concentration of ~0.3 *m*. Because nearly all of the samples from the Melton Valley Storage Tanks had higher concentrations of the hydroxide ion (see Table 7), the contents of those tanks apparently must be classified as characteristically corrosive and, therefore, as mixed (radioactive and hazardous) wastes.

Available data on chemical constituents are inadequate to make a determination as to whether the contents of the Melton Valley Storage Tanks are also characteristically hazardous under the EP toxicity test. Detection limits are too high because of the dilutions needed to handle radioactive samples at the ICP laboratory and the general sensitivity and accuracy of the SSMS technique. Efforts are under way to close this gap.

Table 26. Maximum concentration of contaminants for characteristic of EP toxicity

EPA hazardous waste No.	Contaminant	Maximum concentration (mg/L)
D004	Arsenic	5.0
D005	Barium	100.0
D006	Cadmium	1.0
D007	Chromium	5.0
D008	Lead	5.0
D009	Mercury	0.2
D010	Selenium	1.0
D011	Silver	5.0
D012	Endrin	0.02
D013	Lindane	0.4
D014	Methoxychlor	10.0
D015	Toxaphene	0.5
D016	2,4-D	10.0
D017	2,4,5-TP (Silvex)	1.0

Source: 40 CFR 261.24

6.6 Recommendations for Additional Activities

Several gaps in the information currently available have been noted in the preceding sections. Operation of the LLW evaporators without the salt contribution from PWTP has significantly changed the characteristics of the concentrate being generated from the concentrate characterized in this report. It is recommended that new samples be taken and analyzed once the new operating mode has stabilized (directly from the evaporator vessel, if practical, to avoid mixing with the contents of W-23). It would also be desirable to devise a sampling method for C-1 and C-2.

Better data are needed on the source terms. However, the limiting factor at this time is the ability to conduct meaningful analyses of

diluted samples. Before further sampling is attempted, these analytical obstacles need to be overcome. The same issue applies to RCRA analyses of the contents of the 50,000-gal tanks.

An ongoing characterization of the PWTP bottoms is being conducted by the Chemical Technology Division as part of bench-scale studies that support the PWTP operation.

In any additional characterization work, the experiences of past sampling and analysis campaigns need to be incorporated into the planning for future activities. In particular, more effort should go into drawing up request forms and ensuring that the data that the analyses can generate will meet the needs of the characterization.

Appendix

DATA FROM GUNITE TANK SLUDGE REMOVAL AND NEW HYDROFRACTURE FACILITY OPERATIONS

Table A.1. Tank volumes emptied in the course of injections at the New Hydrofracture Facility (gal)

Tank	ILW-1	SI-1	SI-2	SI-3	SI-4	SI-5	ILW-20	SI-6	SI-7	SI-8	SI-9	SI-10	ILW-21	Total
W-24	(Need data)	42,700	42,600	38,400	30,809[a]	(Need data)	(Need data)	37,547	36,284	35,060	31,700	37,500		332,600
W-25		41,000	2,000	86,000[a]	32,657			51,078[a]	33,669	32,700	32,060	34,270		345,434
W-26		40,500	27,700	59,900[a]	32,579			34,624	41,683[a]	34,560	33,990	34,900		340,436
W-27		42,900	40,200	32,400[a]	34,552			36,558	37,547	32,780	32,210		39,770[a]	328,917
W-28		8,000[b]											41,470	49,470
W-29		9,000[b]											37,870	46,870
W-30		25,100		30,600[a]	35,558				6,991	35,907	31,900	35,700		201,756
W-31		26,500			32,022			34,140		16,670	22,000	33,670		165,002
Total	160,000	235,700	112,500	247,300	198,177	158,000	111,000	193,947	156,174	187,677	183,860	176,040	119,110	2,239,485

[a]Tanks refilled during course of injection.

[b]LLW concentrate injected with sludge.

Table A.2. Log of sluicing operations and hydrofracture injections

Sluicings	Injections	Date completed	Tank sluiced	Volume sluiced (gal)	Volume injected (gal)
	ILW-19	17-Jun-82			160,000
S-1		16-Jul-82	W-5	123,700	
S-2		01-Aug-82	W-5	63,400	
	SI-1	15-Aug-82			192,000
S-3		16-Aug-82	W-5	82,000	
S-4		31-Aug-82	W-5	67,210	
	SI-2	24-Sep-82			116,000
S-5		27-Sep-82	W-5	45,600	
S-6		06-Oct-82	W-5	49,150	
S-7		15-Oct-82	W-5	51,700	
S-8		27-Oct-82	W-5	55,600	
	SI-3	29-Oct-82			248,000
S-9		16-Nov-82	W-5	73,950	
S-10		23-Nov-82	W-5	50,100	
S-11		06-Dec-82	W-5	75,800	
Transfer		01-Jan-83	W-5	55,000	
S-12		16-Mar-83	W-5	65,580	
S-12A		08-Apr-83	W-5	55,880	
	SI-4	10-Apr-83			194,000
S-12B		20-Apr-83	W-5	30,050	
S-13		03-May-83	W-5	40,750	
	SI-5	18-May-83			158,000
S-14		10-Jun-83	W-6	82,250	
	ILW-20	15-Jun-83			111,000
S-15		16-Jun-83	W-6	33,820	
S-16		30-Jun-83	W-6	51,820	
	SI-6	14-Jul-83			204,000
S-17		19-Jul-83	W-6	32,150	
S-18		22-Jul-83	W-6	26,930	
S-19		03-Aug-83	W-6	44,780	
S-20		05-Aug-83	W-6	11,050	
	SI-7	10-Aug-83			162,900
S-21		14-Sep-83	W-7	66,770	
S-22		22-Sep-83	W-7	22,960	
S-23		12-Oct-83	W-8	57,480	
S-24		20-Oct-83	W-8	52,880	
	SI-8	26-Oct-83			196,000
S-25		01-Nov-83	W-8	51,160	
S-26		08-Nov-83	W-8	53,930	
S-27		11-Nov-83	W-8	49,030	
S-28		18-Nov-83	W-8	37,540	
	SI-9	02-Dec-83			190,600
S-29		14-Dec-83	W-9	?	
S-30		27-Dec-83	W-10	18,900	
S-31		29-Dec-83	W-10	22,960	
(pump back)		03-Jan-84	W-10	-5,100	
S-32		04-Jan-84	W-10	22,000	
(pump back)		05-Jan-84	W-10	-6,700	
S-33		06-Jan-84	W-10	14,040	
(pump back)		07-Jan-84	W-10	-4,870	
S-34		11-Jan-84	W-10	12,870	
S-35		17-Jan-84	W-10	19,400	
(pump back)		19-Jan-84	W-10	-10,700	
S-36		24-Jan-84	W-10	42,575	
	SI-10	27-Jan-84			185,000
	ILW-21	28-Jan-84			122,000
Total					
Sludge				1,785,395	1,846,500
LLW concentrate					393,000

Table A.3. Radiochemical analyses of LLW tank contents for injection ILW-19 (nCi/mL)

Tank	Sr-90	Cs-137	Co-60	Eu-152	Eu-154	Eu-155	Ru-106	Pu-239	Pu-238	Am-241	Cm-244
W-24	550	34,000	140				210	1.8		5.5	25
W-25	200	37,000	100				5.3	0.19		0.63	2.9
W-26	160	21,000	61				820			3.2	1.7
W-27	150	29,000	82				1,000			1.5	0.58
W-28	8,500	13,000	200	1,100	690	260	1,600			290	690
W-29	7,400	15,000	290	1,600	1,100	340	2,100			580	1,100
W-29A[a]	170	14,000	34				260	0.17	0.63	1	11

[a]W-29A is the same contents as W-29, resampled and reanalyzed.

Source: ORNL/NFW-84/38.

Table A.4. Radiochemical analyses of LLW tank contents for injection SI-1 (nCi/mL)

Tank	Location	Sr-90	Cs-137	Cs-134	Co-60	Eu-152	Eu-154	Eu-155	Pu-239	Pu-238	Am-241	Cm-244
W-24	Middle	54,000	11,000	66	4,800	1,500	1,300	340	62	62	87	2,300
	Bottom	43,000	14,000	85	3,800	1,300	1,100	320	53	110	100	2,100
W-25	Middle	25,000	5,300	32	58	210	170	55	5.8	9	29	260
	Bottom	77,000	16,000	180	5,700	1,700	1,700	420	68	110	220	400
W-26	Middle	14,000	2,600	18	400	370	340	98	5	9.8	58	660
	Bottom	20,000	14,000	85	29	71	63	21	0.48	1.3	6.3	74
W-27	Middle	100,000	2,900	29	7.7	340	340	95	14	29	77	1,200
	Bottom	34,000	6,900	82	<1.1	24	<1.8	<11	<0.05	<0.05	<0.16	<0.13
W-30	Bottom	79,000	2,300	9.2	19	140	130	32	1.9	3.4	32	290

Source: ORNL/NFW-84/34.

Table A.5. Radiochemical analyses of LLW tank contents for injection SI-2 (nCi/mL)

Tank	Location	Sr-90	Cs-137	Cs-134	Co-60	Eu-152	Eu-154	Eu-155	Pu-239	Pu-238	U-233
W-24	Middle	54,000	8,700	53	79	110	79	26	8.7	21	190
	Bottom	46,000	8,700	53	2,400	79	53		26	19	150
W-25	Middle	54,000	13,000	53	1,400	79	110	53	24	16	180
	Bottom	81,000	16,000	160	920	110	110	26	11	34	240
W-26	Middle	160,000	2,700		3,200				50	110	45
	Bottom	110,000	13,000	110	4,000	110	110	<26	34	95	92
W-27	Middle	170,000	180		2,400	130	160	79	160	260	90
	Bottom	110,000	2,500		110	260	240	79	45	98	370

Source: ORNL/NFW-84/35.

Table A-6. Radiochemical analyses of LLW tank contents for injection SI-3 (nCi/mL)

Tank	Sr-90	Cs-137	Cs-134	Co-60	Eu-152	Eu-154	Eu-155	Pu-239	Pu-238	U-233	Am-241	Cm-244
W-24	92,000	1,200		970	290	230	96	100	49		200	640
W-25A	53,000	12,000	53	3,000	750	680	220	48	72	140	36	1,200
W-25B	38,000	3,000	11	850	210	230	81	130	54	37	110	400
W-25C	19,000	1,500	5.3	420	100	110	40	65	27	19	55	200
W-26A	100,000	2,100		410	130	250	110	270	110	26	350	360
W-26B	54,000	1,200		240	44	110	46	220	77	18	200	160
W-27A	98,000	920		360				27	22		13	16
W-27B	74,000	690		270				24	17		9.7	12
W-30A	53,000	12,000	53	3,000	750	680	220	48	72	140	36	1,200
W-30B	48,000	11,000	48	2,700	680	620	200	44	66	130	33	1,100

Source: ORNL/NFW-84/36.

Table A.7. Radiochemical analyses of LLW tank contents for injection SI-4 (nCi/mL)

Tank	Sr-90	Cs-137	Co-60	Eu-152	Eu-154	Eu-155	Pu-239[a]	Pu-238	U-238	U-233	Am-241	Cm-244
W-24	6,000	300	170		19	7.9	30	4	0.57	2	19	11
W-24A[b]	5,000	390	58	12	19		27	15	0.66	2.5	18	34
W-25	16,000	730	78	33	69	24	120	15	1.1	10	43	45
W-26	40,000	1,100	680	170	230	69	200	130	1.6	14	82	630
W-27	13,000	630	44	6	69	28	190	16	2.2	8.2	70	32
W-30	7,200	400	26		10	8.8	38	5.4	0.95	3	26	11
W-31	3,500	290	56		15	9.3	27	2.6	1.2	2.4	8.7	16

[a]Pu-239 data include Pu-240.
[b]The waste identified as W-24A was pumped from Bethel Valley after the major portion of the waste originally in W-24 had been injected.

Source: ORNL/NFW-84/37.

Table A.8. Radiochemical analyses of LLW tank contents for injection SI-5 (nCi/mL)

Tank	Sr-90	Cs-137	Co-60	Eu-152	Eu-154	Eu-155	Pu-239	Pu-238	U-238	U-233	Am-241	Cm-244
W-24	5,000	450	94	17	27		30	4.6	3	0.62	19	62
W-25	41,000	1,500	250	140	180	73	140	47	2.7	13	140	420
W-26	2,500	490	92	5.1	14	5.3	27	3	0.81	1.6	16	18
W-27	5,700	510	180	17	31	12	30	4.3	1.4	4.3	25	72
W-31	2,100	390	33	4.6	10	3.4	1.6	16	0.81	1.4	10	5.4

Source: ORNL/NFW-83/18.

Table A.9. Radiochemical analyses of LLW tank contents for injection ILW-20 (nCi/mL)

Tank	Sr-90	Cs-137	Cs-134	Co-60	Eu-152	Eu-154	Eu-155	Pu-239	Pu-238	U-238	U-235	U-233	Am-241	Cm-244
W-26	6,800	12,000	380	440	53	26	26	3.6	4				2.8	40
W-27	11,000	35,000		2,900	390	250	110	38	22	0.53	<0.3	7.6	36	340
W-28	3,600	4,900	130	50	160	96	33	49	18	<0.3	<0.3	1.1	3	170
W-29	6,100	7,600	120	74	28	220	8.7	2.4	2.7	<0.3	<0.3	1.1	2.2	31

Source: ORNL/NFW-83/25.

Table A.10. Radiochemical analyses of LLW tank contents for injection SI-6 (nCi/mL)

Tank	Sr-90	Cs-137	Co-60	Eu-152	Eu-154	Eu-155	Pu-239	Pu-238	U-238	U-238	U-233	Am-241	Cm-244
W-24	96,000	2,200	750	64	100	34	80	40	0.54	0.4	9.7	150	2,100
W-25	98,000	5,100	960	360	400	1,300	150	83	3	0.27	40	450	2,000
W-25A[a]	52,000	2,500	470	150	180	480	95	39	1.1	0.12	15	180	960
W-26	150,000	4,300	970	180	190	61	250	69	0.27	<0.27	5.4	71	2,400
W-27	110,000	7,800	760	220	180	72	190	58	3.2	>0.27	11	58	1,200
W-30	4,200	490	61	5.8	19	7.8	32	3				22	22
W-31	2,100	390	33	4.6	10	3.4	1.6	16	0.81		1.4	10	5.4

[a]W-25A is a combination of 37% W-25, 9% W-26, and 54% W-30.

Source: ORNL/NFW-83/34.

Table A.11. Radiochemical analyses of LLW tank contents for injection SI-7 (nCi/mL)

Tank	Sr-90	Cs-137	Co-60	Eu-152	Eu-154	Eu-155	Pu-239[a]	Pu-238	U-238	U-235	U-233	Am-241	Cm-244
W-24	36,000	2,700	120	<16	26	14	140	10	3.5		6.2	20	260
W-25	48,000	3,800	220	43	77	27	110	22	3.2		8.9	44	650
W-26	26,000	2,200	170	15	32	14	86	10	2.7		4.3	17	240
W-26A[b]	28,000	2,300	170	16	31	14	90	11	2.8		4.5	18	260
W-27	36,000	2,400	210	44	43	20	74	18	1.9		5.4	30	420
W-30	4,200	490	61	5.8	19	7.8	32	3				22	22

[a]Pu-239 data include Pu-240.
[b]W-26A is a combination of 6% W-24, 6% W-25, and 88% W-26.

Source: ORNL/NFW-83/35.

Table A.12. Radiochemical analyses of LLW tank contents for injection SI-8 (nCi/mL)

Tank	Sr-90	Cs-137	Co-60	Eu-152	Eu-154	Eu-155	Pu-239[a]	Pu-238	U-238	U-235	U-233	Am-241	Cm-244
W-24	67,000	23,000	730	880	590	160	110	220	11	<0.26	26	64	580
W-25	460,000	24,000	6,300	1,500	1,400	360	130	370	5.1	<0.26	160	180	7,800
W-26	30,000	19,000	310	120	37	18	31	84	11	0.79	20	29	300
W-27	320,000	15,000	4,500	990	990	220	140	280	1.1	0.53	150	250	5,300
W-30	550,000	23,000	2,600	1,000	980	300	180	540	2.9	0.79	110	350	6,300
W-31	530,000	21,000	2,600	950	970	230	180	540	2.4	<0.26	140	35	6,200

[a]Pu-239 data include Pu-240.

Source: ORNL/NFW-84/12.

Table A.13. Radiochemical analyses of LLW tank contents for injection SI-9 (nCi/mL)

Tank	Sr-90	Cs-137	Co-60	Eu-152	Eu-154	Eu-155	Pu-239[a]	Pu-238	U-238	U-235	U-233	Am-241	Cm-244
W-24	300,000	23,000	1,200	410	450	140	300	320	4.2	0.4	66	460	2,600
W-25	180,000	26,000	660	190	300	93	230	190	2	<0.26	48	200	1,200
W-26	190,000	23,000	790	200	300	140	210	190	2.6	<0.26	50	260	1,400
W-27	120,000	23,000	400	<210	160	50	160	83	4.2	<0.26	31	98	610
W-30	110,000	20,000	520	<200	<140	<87	160	100	1.6	<0.26	33	130	800
W-31	96,000	19,000	640	170	110	53	130	94	3.4	<0.26	33	110	840

[a]Pu-239 data include Pu-240.

Source: ORNL/NFW-84/13.

Table A.14. Radiochemical analyses of LLW tank contents for injection SI-10 (nCi/mL)

Tank	Sr-90	Cs-137	Co-60	Eu-152	Eu-154	Eu-155	Pu-239[a]	Pu-238	U-238	U-235	U-233	Am-241	Cm-244
W-24	37,000	5,500	370	79	120	29	71	130	1	0.53	15	82	820
W-25	66,000	8,500	630	150	240	63	170	480	5.8	<0.26	26	170	1,300
W-26	42,000	5,300	370	74	120	40	71	160	0.66	0.53	16	69	740
W-30	48,000	7,100	50	130	220	69	170	500	4.8	<0.26	18	140	1,300
W-31	110,000	14,000	77	210	220	45	150	260	12	<0.26	37	130	1,400

[a]Pu-239 data include Pu-240.

Source: ORNL/NFW-84/14.

Table A.15. Radiochemical analyses of LLW tank contents for injection ILW-21 (nCi/mL)

Tank	Sr-90	Cs-137	Cs-134	Co-60	Eu-152	Eu-154	Eu-155	Pu-239	Pu-238	U-233	Am-241	Cm-244
W-27	11,000	4,800	110	420	240	140	55	11	9	9.2	29	210
W-28	4,000	1,900	420	79	61	37	16	6.1	8.5	1.3	8.5	48
W-29	7,900	7,400	98	1,000	370	210	95	13	19	3.7	23	220

Source: ORNL/NFW-84/15.

Internal Distribution

1. L. D. Bates
2. J. B. Berry
3. J. L. Botts
4. H. M. Braunstein
5. C. H. Brown
6. R. M. Canon
7. W. H. Christie
8. B. R. Clark
9. E. D. Collins
10. D. A. Costanzo
11. W. K. Crowley
12-16. S. P. duMont
17. N. W. Durfee
18. H. R. Dyer
19. D. E. Ferguson
20. C. P. Frew
21. H. R. Gaddis
22. J. A. Getsi
23. R. W. Glass
24. B. A. Hannaford
25-29. R. E. Helms
30. F. J. Homan
31. J. R. Horton
32-36. M. V. Keigan
37. E. H. Krieg
38. L. C. Lasher
39. K. E. Lott
40. A. J. Mattus
41. T. H. Monk
42. M. I. Morris
43. C. E. Nix
44-53. F. J. Peretz
54. T. H. Row
55. T. F. Scanlan
56. C. B. Scott
57. W. D. Shults
58. J. L. Snyder
59. J. H. Stewart
60. L. H. Stinton
61. S. H. Stow
62. W. T. Thompson
63. W. W. Thompson
64. S. D. Van Hoesen
65. C. P. Williamson
66. H. R. Yook
67. ORNL Patent Office
68. Central Research Library
69. Document Reference Section
70-71. Laboratory Records Department
72. Laboratory Records, RC

External Distribution

73. E. A. Jordan, Office of Defense Waste and Transportation, Operations and Project Division, U.S. Department of Energy, Mail Stop DP-122, Washington, DC 20545
74. Office of Assistant Manager for Energy Research and Development, Department of Energy, Oak Ridge Operations, P.O. Box E, Oak Ridge, TN 37831
75-104. Technical Information Center, Department of Energy, Oak Ridge, Tennessee 37831