ORNL/MD/LTR-232

MOX Fuel Pin Volume Measuring Apparatus

R.N. Morris
D.W. Heatherly

September 2002

Fissile Materials Disposition Program

Notice

This report was prepared as an account of work sponsored by an agency of the United States Government. Neither the United States Government nor any agency thereof, or any of their employees, makes any warranty, expressed or implied, or assumes any legal liability or responsibility for any third party's use or the results of such use, of any information, apparatus, product or process disclosed in this report, or represents that its use by such third party would not infringe privately owned rights.

Revision History

Revision number	Date Issued	Reason for revision
0	September 2002	First Issue

OAK RIDGE NATIONAL LABORATORY
MANAGED BY LOCKHEED MARTIN ENERGY RESEARCH CORPORATION
FOR THE U.S. DEPARTMENT OF ENERGY

BLDG. 3525, M/S 6295, ROOM 106
POST OFFICE BOX 2008
OAK RIDGE, TENNESSEE 37831-6295
TELEPHONE: 423-241-4237
FACSIMILE: 423-576-7862

September 2002

Distribution

MOX Fuel Pin Volume Measuring Apparatus

The enclosed document describes the MOX Fuel Pin Volume Measuring Apparatus that has been designed and fabricated at Oak Ridge National Laboratory to measure the fuel pin free volume and the volume of fuel fragments. This effort was sponsored by the Fissile Materials Disposition Program (FMDP). This work was carried out for the Irradiated Fuels Examination Laboratory by the staff of the Nuclear Science and Technology Division (apparatus design, fabrication, and testing) and the Metals and Ceramics Division (analysis) of the Oak Ridge National Laboratory during the period from August 2001 though August 2002.

This is a Level-2 document as defined in the Fissile Materials Disposition Program Light-Water Reactor Mixed-Oxide Fuel Irradiation Test Project Plan, ORNL/MD/LTR-78.

Sincerely,

Robert N. Morris
Fissile Materials Disposition Program

Enclosure

Distribution: See enclosure

ORNL/MD/LTR-232

MOX Fuel Pin Volume Measuring Apparatus

R.N. Morris
D.W. Heatherly

September 2002

Oak Ridge National Laboratory

CONTENTS

FIGURES vi
TABLES vii
ACRONYMS viii
ABSTRACT ix
1. INTRODUCTION 1
  1.1 General 1
  1.2 Volume Measuring Concept 1
  1.3 Temperature Effects 4
2. APPARATUS DESIGN 6
  2.1 Construction 6
  2.2 Pellet Volume 8
  2.3 Calibration 9
3. REFERENCES 13
4. DISTRIBUTION 14

FIGURES

Figure 1. Simple volume measuring apparatus. 2
Figure 2. Photograph of Fuel Pin Volume Measuring Apparatus. 6
Figure 3. Calibration curve generated from Table 1. 12

TABLES

TABLE 1 Results of calibration run…….….9

ACRONYMS

ATR	Advanced Test Reactor
FPVMA	Fuel Pin Volume Measuring Apparatus
FMDP	Fissile Materials Disposition Program
INEEL	Idaho National Engineering and Environmental Laboratory
LWR	Light Water Reactor
MOX	Mixed Oxide
ORNL	Oak Ridge National Laboratory

ABSTRACT

This report summarizes the design of the Fuel Pin Volume Measuring Device designed and fabricated at Oak Ridge National Laboratory for use in conjunction with the postirradiation examination of MOX test fuel. This device makes use of a simple gas compression technique and a precision pressure gauge to provide a moderate (1%) precision measurement of the fuel pin free volume. With slight modification to the measuring apparatus, fuel volume for density determination can also be obtained. This device is currently being applied to the 40 GWd/MT and higher burnup fuel pins irradiated in the Advanced Test Reactor (ATR) as part of the Light Water Reactor Mixed Oxide Fuel Irradiation Test sponsored by the Office of Fissile Materials Disposition, U.S. Department of Energy.

1. INTRODUCTION

1.1 General

The Fuel Pin Volume Measuring Apparatus (FPVMA) was developed to provide a simple means for measurement of the internal free volume of the irradiated MOX fuel pins. After pellet loading, each fuel pin retains a free volume of about 1.2 cm^3, more than 80% of which is associated with the gas plenum [Reference 1]. During irradiation, pellet densification or swelling tends to increase or decrease the portion of the free volume in the vicinity of the pellets. Knowledge of the total free volume is necessary to determine the gas release fraction from the pressure measurements taken as part of the PIE.

An important constraint for the development of the FPVMA was the need to minimize the tare volume associated with the apparatus. Typically, such measurements are based on the pressure difference between a reference volume at a known pressure and the same reference volume combined with the unknown evacuated fuel pin volume. The fuel pin volume is then determined using the ideal gas law. Due to the small free volume of these fuel pins (~1cm^3), measurement accuracy will suffer if the tare volume (valves, sensors, and connecting lines) of the apparatus tends to overwhelm the fuel pin such that pressure differences are small, creating large uncertainties in the calculated fuel pin volume.

These difficulties have been avoided in the current design by the use of a system that determines the fuel pin volume by effectively measuring the compression ratio of a variable volume apparatus [Reference 2]. By carefully controlling the design of a compact apparatus, the tare volume is held to a minimum so that good sensitivity for small fuel pin volumes is obtained.

This apparatus can also be applied to determine the volumes of partial-pellet fuel samples. Together with simple weight measurements, this permits determination of irradiated fuel density.

1.2 Volume Measuring Concept

A simple way to measure the free volume within a fuel pin is to place the opened pin in an apparatus with a changeable volume and measure the pressure of the system both before and after the known change in volume. Figure 1 illustrates such an apparatus. A big advantage of this compact design is that there are no valves, gas fill lines, or vacuum lines.

The device is assembled at atmospheric pressure and sealed. The pressure is noted and the piston compressed a known amount. The final pressure is then related to the fuel pin volume.

Using the ideal gas law, the initial pressures and volumes can be related to the final pressures and volumes:

$$P_s V_p + P_s V_{cs} = P_e V_p + P_e V_{ce} \quad \textbf{(1)}$$

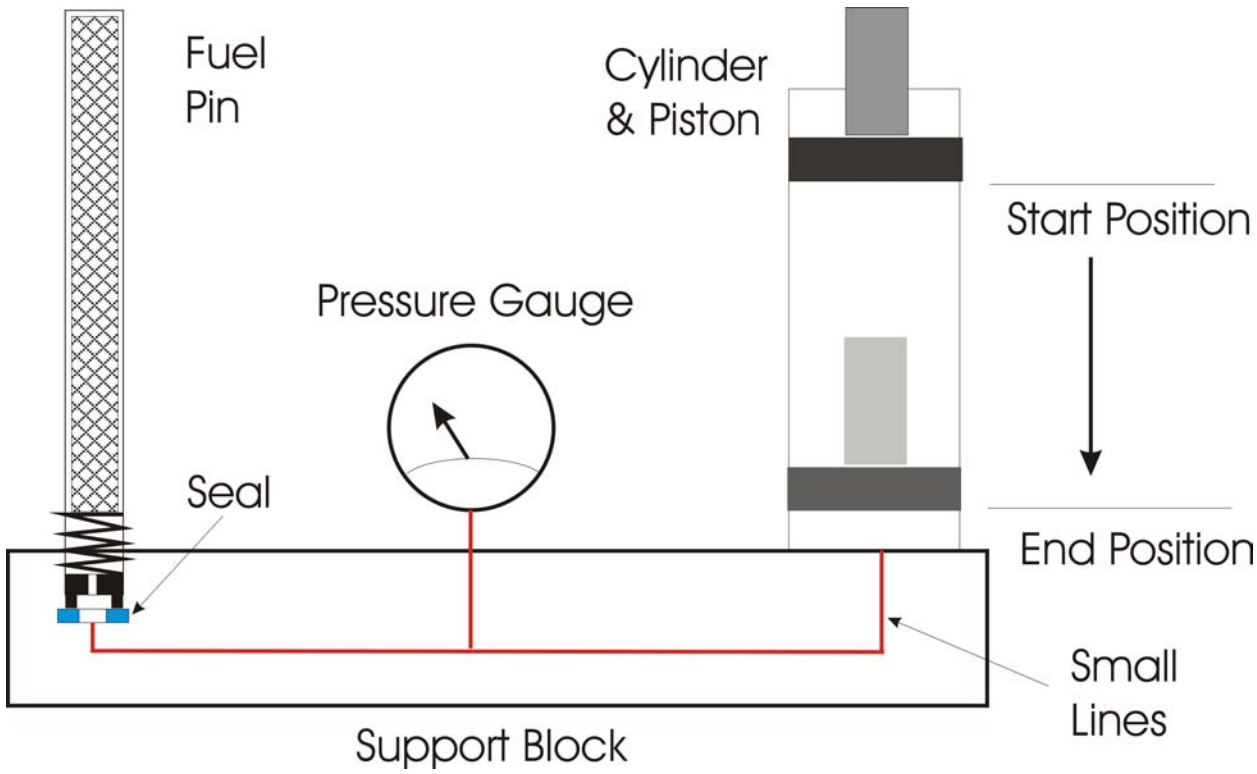

Figure 1. Schematic of a simple volume measuring apparatus.

where P_s is the apparatus starting pressure, P_e is the apparatus ending pressure, V_p is the fuel pin volume, V_{cs} is the cylinder (and gauge and lines) starting volume, and V_{ce} is the cylinder (and gauge and lines) ending volume. One can solve this equation for the unknown pin volume:

$$V_p = \frac{\left(P_s V_{cs} - P_e V_{ce}\right)}{\left(P_e - P_s\right)} \tag{2}$$

With an estimate for the fuel pin volume, one can also determine, for design purposes, the ending pressure of the apparatus:

$$P_e = \frac{P_s\left(V_p + V_{cs}\right)}{\left(V_p + V_{ce}\right)} \tag{3}$$

An important objective of designing an apparatus of this nature is to determine the sensitivity of the device to the parameter of interest. In particular, one would like to relate a fractional change in ending pressure to a fractional change in fuel pin volume:

$$\frac{\Delta P_e / P_e}{\Delta V_p / V_p} \approx \frac{V_p}{P_e}\frac{\partial P_e}{\partial V_p} = -\frac{V_p\left(V_{cs} - V_{ce}\right)}{\left(V_p + V_{cs}\right)\left(V_p + V_{ce}\right)} \tag{4}$$

To achieve a practical device, one needs to make the above ratio as large as possible. In terms of the expected fuel pin volume, one desires that

$$R = \frac{(\alpha - \beta)}{(1+\alpha)(1+\beta)} \tag{5}$$

with

$$\alpha = \frac{V_{cs}}{V_p} \quad and \quad \beta = \frac{V_{ce}}{V_p} \tag{6}$$

be as large as possible. The goal is a large alpha and a small beta.

Thus, by estimating R one can determine the sensitivity of the ending pressure measurement to small variations in the fuel pin volume:

$$\frac{\Delta P_e}{P_e} = -R\frac{\Delta V_p}{V_p} \tag{7}$$

Clearly, one wants small volume differences to result in large pressure changes.

As a rough guess at the likely performance, one might use an alpha of about 10.5 and a beta of about 0.5 giving a value of 0.6 for R. This comes from a line and micro pressure gauge volume of about 0.5 cm^3, a fuel pin volume of roughly 1 cm^3 and a complete 10 cm^3 piston compression. This implies that a 0.5% change in ending pressure (roughly the maximum attainable pressure resolution) corresponds to a 0.8% change in fuel pin volume leading to the possibility that a device could be designed to give a measurement accuracy of 1% or so.

For the practical purposes of the design and calibration, the equation for the fuel pin volume may be recast into a linear form for parameter fitting purposes:

$$V_p = \frac{\left(P_s V_{cs} - P_e V_{ce}\right)}{\left(P_e - P_s\right)} = C_1 x - C_0 \tag{8}$$

where

$$x = \frac{P_e}{\left(P_e - P_s\right)}, \; C_1 = V_{cs} - V_{ce}, \; and \; C_0 = V_{cs}. \tag{9}$$

If P_s is always the atmospheric pressure, P_a, and one uses the gauge pressure, $P_{eg} = P_e - P_a$, x can be rewritten as:

$$x = \frac{\left(P_{eg} + P_a\right)}{\left(P_{eg} + P_a - P_a\right)} = \frac{\left(P_{eg} + P_a\right)}{P_{eg}} = 1 + \frac{P_a}{P_{eg}}. \qquad \textbf{(10)}$$

Finally, the equation for the fuel pin volume becomes:

$$V_p = \frac{D_1}{P_{eg}} - D_0 \qquad \textbf{(11)}$$

where

$$D_1 = \left(V_{cs} - V_{ce}\right) P_a \;\; and \;\; D_0 = V_{ce} \qquad \textbf{(12)}$$

with P_s always equal to atmospheric pressure (same for calibration and use).

The constants D_0 and D_1 may be determined from the apparatus design or from a calibration technique.

1.3 Temperature Effects

The air being compressed shares a large surface area with the relatively very large surrounding heat sink of the measuring apparatus. Trials with fuel pin simulators of known volumes have confirmed that no correction for temperature increase due to compression is necessary provided that a few seconds are allowed for the pressure reading to stabilize. However, a correction may be necessary if significant temperature differences exist between the volume being measured and the connected volume within the measurement apparatus.

Because of the decay heating associated with the enclosed fuel pellets, the fuel pin may be at a different temperature than the bulk apparatus. In this case equation (1) can be easily modified by including a temperature term to compensate for the difference. The following analysis assumes that the apparatus is at one temperature and that the fuel pin plenum region is at a somewhat different temperature. In reality, a temperature gradient is likely to exist over the fuel pin and the apparatus, but since the temperature differences of interest are minor (<25ºC) and most of the pin volume (approximately 80%) is within the plenum region, average values will be used for the two temperatures. Rewriting equation (1) with temperature terms (same subscript meanings):

$$\frac{P_s V_p}{T_p} + \frac{P_s V_{cs}}{T_c} = \frac{P_e V_p}{T_p} + \frac{P_e V_{ce}}{T_c} \qquad \textbf{(13)}$$

Solving for the fuel pin volume gives:

$$V_p = \frac{T_p}{T_c} \frac{\left(P_s V_{cs} - P_e V_{ce}\right)}{\left(P_e - P_s\right)} \qquad \textbf{(14)}$$

So, one can make the measurement as above and, to a first approximation, correct for minor temperature differences by multiplying the constant temperature result by the absolute temperature ratio:

$$V_p^{\text{TemperatureCorrected}} = \frac{T_p}{T_c} V_p^{\text{ConstantTemperature}} \tag{15}$$

Because of the low decay heating of the MOX fuel at the time the volume measurements are made, such a correction would be minor and can be neglected.

2. APPARATUS DESIGN

2.1 Construction

The design of the apparatus includes a piston and cylinder so that a large volume change can be effected conveniently within a small space. Small-diameter holes drilled through a stainless steel block serve as connecting lines and a micro-pressure sensor provides pressure measurement. The sensor, piston and cylinder, and fuel pin mating port have been tightly integrated into one unit so that the tare volume is minimized. A photograph of the apparatus with a fuel pin in place is shown in Figure 2.

The cylinder, which is vented to atmosphere at the bottom of its stroke, is operated (pressurized) by pushing down on a lever arm. Vent holes in the cylinder, uncovered by the piston at maximum displacement, define a reproducible piston stroke. The pressure sensor, a 0 to 200 psig unit, is also referenced to atmosphere. The fuel pin, about 7.6 inches long, is held in place by the action of gravity on a holding lever arm. This makes fuel pin handling convenient in the hot cell.

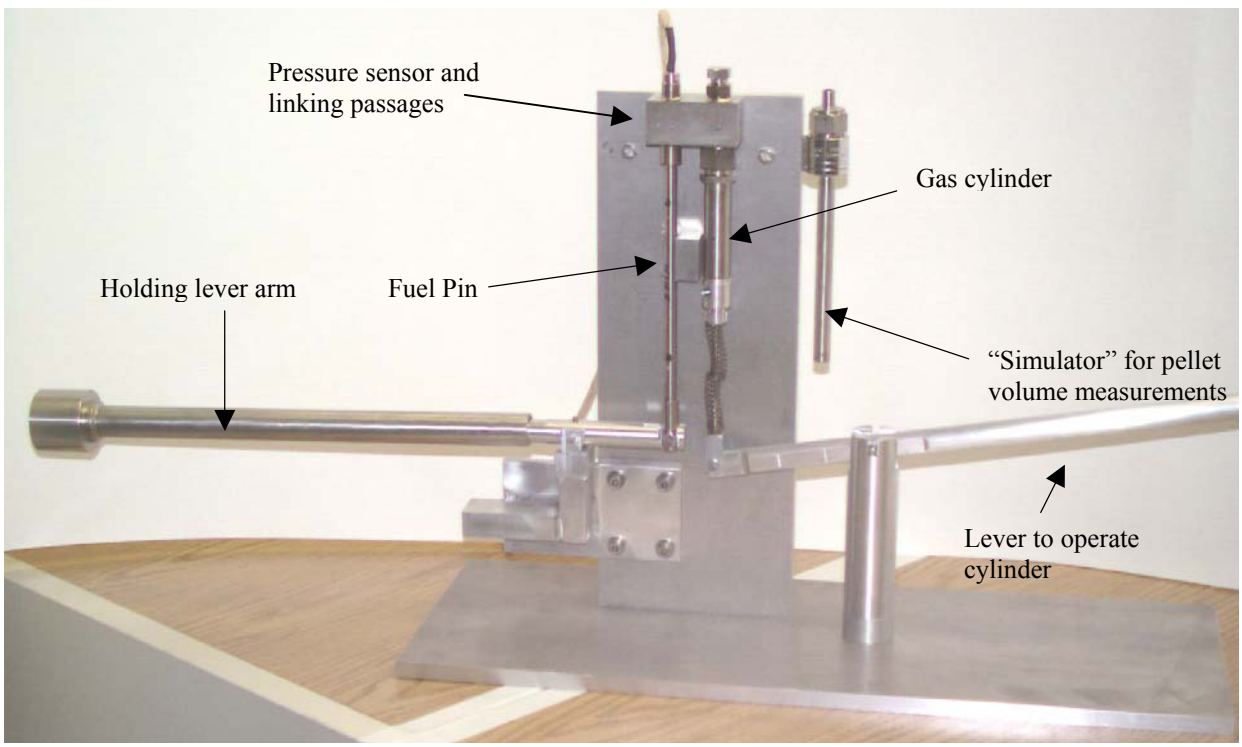

Figure 2. Photograph of Fuel Pin Volume Measuring Apparatus.

Figure 3 shows a cut away design view of the major components of the apparatus. By studying the schematic one can see how downward movement of the right hand lever compresses the air in the system and how the tight component integration keeps the tare volume to a minimum. The

fuel pin simulator, mounted on the right side of the apparatus for convenience, can be installed in place of the MOX fuel pin to determine fuel pellet volume. Fuel pellet volume is determined by simply subtracting the measured volume of the simulator with the pellet in the chamber from the measured volume of the empty simulator.

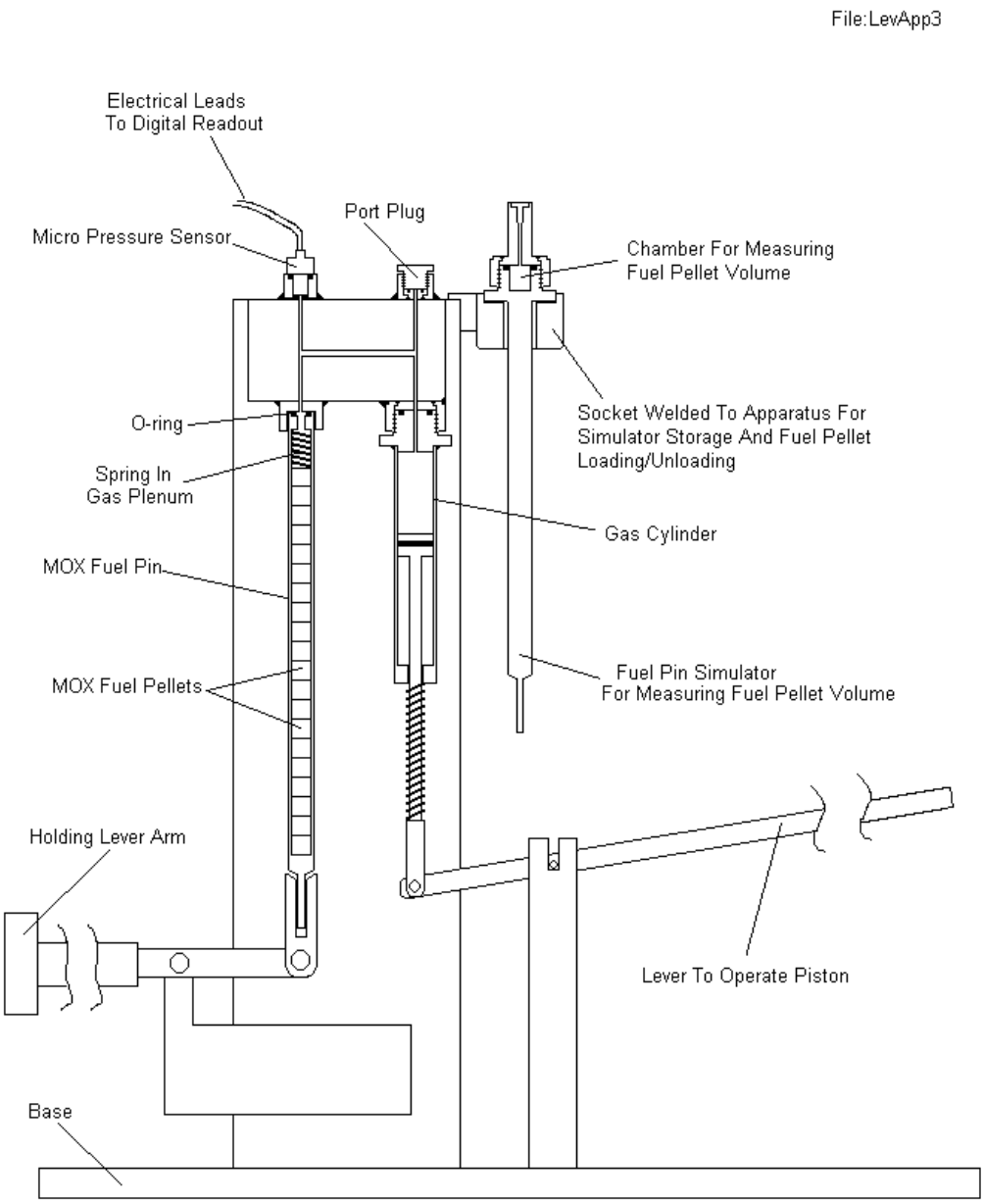

Figure 3. Cut away design view of the Fuel Pin Volume Measuring Apparatus.

Apparatus components subject to wear or radiation damage, such as the gas cylinder and micro-pressure sensor, are threaded into place with O-ring seals and can be remotely replaced in the hot cell.

With a 1.2 cm^3 fuel pin free volume, the device has an α of approximately 9 and a β of about 0.7 ($R \approx 0.5$). The overall uncertainty in volume measurements is approximately 1% as detailed in Section 2.3.

2.2 Pellet Volume

The FPVMA includes as an auxiliary fixture, a sealable capsule ("fuel pin simulator") that mimics a fuel pin for measuring the volume of full or partial fuel pellets (see Figures 2 and 3). This capsule mounts in the same way as the fuel pin and is pressurized in the same way. In use, the capsule volume is measured, a pellet inserted, the volume of the capsule with the pellet inside re-measured and the pellet volume determined by subtracting the second measurement from the first.

Because of the subtraction of the two volume measurements to get a smaller number, the potential uncertainty in the pellet volume measurement is larger than that of either of the single measurements. If we assume that the volume uncertainties in the empty and filled capsule measurements are uncorrelated, the uncertainty in the fuel pellet volume, ΔF, is related to the empty, ΔC_e, and filled, ΔC_f, capsule measurements by:

$$\Delta F = \sqrt{(\Delta C_e)^2 + (\Delta C_f)^2} \tag{16}$$

The relative uncertainty can be expressed as:

$$\frac{\Delta F}{F} = \frac{\sqrt{\left[C_e\left(\frac{\Delta C_e}{C_e}\right)\right]^2 + \left[C_f\left(\frac{\Delta C_f}{C_f}\right)\right]^2}}{F} \approx \frac{\eta}{F}\sqrt{C_e^2 + C_f^2} = \frac{\eta}{F}\sqrt{C_e^2 + (C_e - F)^2} \tag{17}$$

where η is the fractional measurement uncertainty (assumed the same for all the measurements within the calibration range).

Assuming that the capsule has about twice the volume of the fuel pellet or fragment to be measured ($C_e = 2F$), the relative uncertainty for a fuel pellet volume measurement is:

$$\frac{\Delta F}{F} \approx \eta\sqrt{5} \tag{18}$$

Thus, this method of measuring pellet volume increases the uncertainty by a factor of 2 or more. Since η is about 1%, the pellet volume measurement uncertainty is 2-3%. This is acceptable for

the purposes intended. The pellet density determinations will have similar uncertainty since the volume measurement uncertainty will dominate the overall uncertainty.

2.3 Calibration

A series of step-volume fuel pin simulators were prepared for apparatus calibration by drilling holes of different depths into the top ends of solid dummy fuel pins. The calibration pins simulate the actual drilled MOX fuel pins, so the volume includes both the volume to be measured ("free volume") and the tare volume associated with the drilling ("drill hole"). The holes drilled into the calibration standards are the same diameter as the hole drilled into the top of the irradiated MOX fuel pin to release the fission gases. Each calibration standard was first drilled 0.350 inches deep to simulate the hole drilled ("drill hole") through the MOX fuel pin top to penetrate the gas plenum. The holes in each calibration standard were then continued to different depths in order to provide calibration standards with volumes ("free volumes") ranging from approximately 0.5 to 1.5 cm^3 in 0.125 cm^3 increments.

It was difficult to dimensionally inspect the deep and small diameter holes to accurately calculate the "free volume" of the calibration standards because the drill holes exhibited a small taper and were not square on the bottom. The actual volumes of the calibration pins were determined by filling each pin with alcohol, computing a before and after weight, and then converting this alcohol mass to volume. The values are shown in Table 1 ("Calibration Volume" column). The average volume uncertainty in the standards is estimated to be approximately 0.5%.

The apparatus is calibrated for "free" volume. The free volume in the fuel pin includes the "plenum" volume plus the volume surrounding the fuel pellets: gas plenum ~ 1.03 cubic centimeters; pellet clearances ~ 0.20 cubic centimeters; total free volume ~ 1.23 cubic centimeters.

Calibration proceeds by inserting the calibration pins into the apparatus, measuring the individual pressures, and least squares fitting the data to equation 11. In this case, P_{eg} is the measured pressure for a particular calibration volume, V_p, and D_0 and D_1 are determined by minimizing the sum of the squares of $(V_p - V_{pfit})/ V_p$ for the volumes used. Table 1 details the method for a test. Figure 4 shows the curve fit.

For each trial in the table, the calibration pins were inserted in random order and each measurement included both the making and breaking of the pressure seal. No zeroing or other adjustments of the apparatus was done during the test period. A measurement was accepted if the pressure reading was stable for a few seconds (no leaks in the seal). Note that the standard deviation of the trials is well below 1%, indicating that the reproducibility of the apparatus is good. This uncertainty is also comparable to or much less than the other uncertainties in the system.

The maximum error in the curve fit to the calibration data is 0.8% in this run. It might be possible to reduce this error by weighting the volumes differently in the fitting (all volumes were given the same weight in this fit), but this error is comparable to other system uncertainties, so this option was not pursued.

Using the maximum curve fit error, 0.8%, the volume standards uncertainty, 0.5%, and twice the maximum trial standard deviation (2 times 0.3% for 95% certainty), 0.6%, the sum of squares uncertainty is approximately 1%. This satisfies the accuracy goal for the device. Under the best of circumstances, the uncertainty would be bounded by the volume standards, so in practice the measurement uncertainty should be in the 0.5 to 1% range.

Table 1 also shows the result of a pellet measuring test. Note that uncertainty in the pellet volume measurement is larger because of the need to take the difference of two measurements, as detailed in Section 2.2.

Determination of Fuel Pin Volume Measuring Apparatus Coefficients

Equation to fit $V_p = (D_1/P_{eg}) - D_0$ cm^3

Data taken on 11-Jul-02

D_0 0.9114 Fit Coefficient
D_1 149.1007 Fit Coefficient

Calibration Volume, V_{cal} (cm^3)	P_{eg} (PSI gauge) Trial 1	P_{eg} (PSI gauge) Trial 2	P_{eg} (PSI gauge) Trial 3	P_{eg} (PSI gauge) Trial 4	P_{eg} (PSI gauge) Trial 5	P_{eg} (PSI gauge) Average	Standard Deviation (Percent)	Calculated Volume, V_p (cm^3)	Percentage Difference $(V_{cal}-V_p)/V_{cal}$	Fractional Difference Squared $((V_{cal}-V_p)/V_{cal})^2$
0.499	105.7	105.5	106.1	105.9	106.2	105.9	0.27%	0.499	0.0%	1.44E-07
0.637	96.4	96.5	96.7	96.2	96.6	96.5	0.20%	0.635	0.3%	7.34E-06
0.762	88.9	89.2	89.1	89	89.1	89.1	0.13%	0.766	-0.5%	2.43E-05
0.891	82.7	82.4	82.3	82.7	82.5	82.5	0.22%	0.891	-0.1%	3.11E-07
1.033	76.7	76.9	76.8	76.6	76.7	76.7	0.15%	1.033	0.0%	2.04E-07
1.167	72.0	71.9	71.7	71.8	71.9	71.9	0.16%	1.159	0.6%	4.21E-05
1.292	67.5	67.4	67.5	67.4	67.6	67.5	0.12%	1.297	-0.4%	1.80E-05
1.426	64.1	63.7	63.6	63.8	63.9	63.8	0.30%	1.415	0.8%	6.33E-05
1.550	60.3	60.4	60.3	60.4	60.2	60.3	0.14%	1.561	-0.7%	5.25E-05

Each pressure measurement involved inserting and removing a calibration volume.
For each trial, the calibration volume order was random.

2.08E-04
Sum of Squares
Minimize this sum
by using EXCEL solver

TABLE 1
Results of calibration run

Use of Capsule to Measure a Simulated Pellet

Empty Capsule

P_{eg} (PSI gauge) Trial 1	P_{eg} (PSI gauge) Trial 2	P_{eg} (PSI gauge) Trial 3	P_{eg} (PSI gauge) Average	Calculated Volume, V_p (cm^3)
65.4	65.5	65.5	65.5	1.366

Capsule with simulated pellet

P_{eg} (PSI gauge) Trial 1	P_{eg} (PSI gauge) Trial 2	P_{eg} (PSI gauge) Trial 3	P_{eg} (PSI gauge) Average	Calculated Volume, V_p (cm^3)
84.4	84.4	84.5	84.4	0.854

Apparatus measured volume of simulated pellet 0.512 cm^3
Fabricated volume of simulated pellet 0.503 cm^3 (Dimensional inspection)
Difference 1.74%

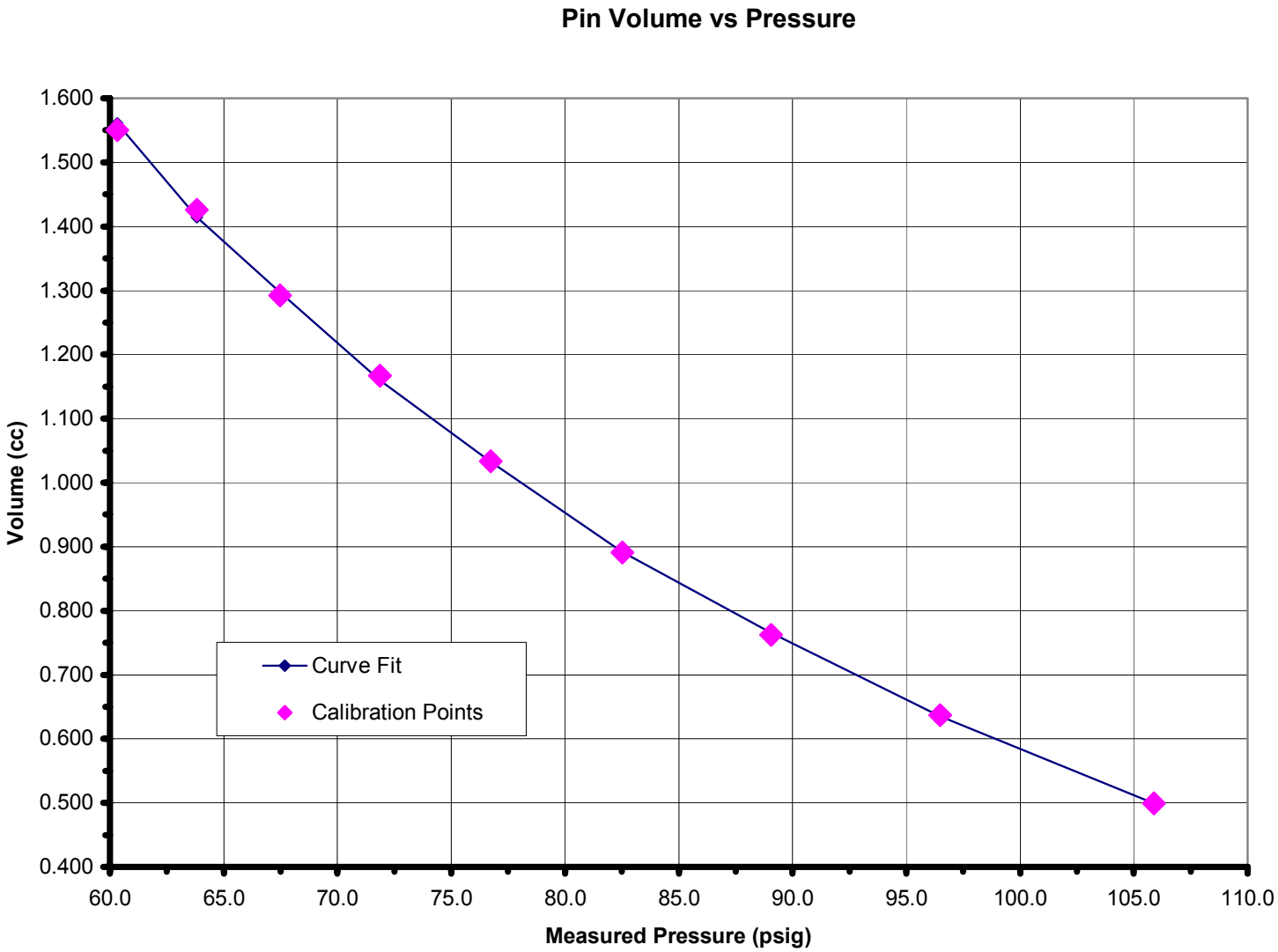

Figure 4. Calibration curve generated from Table 1.

3. REFERENCES

1. S.A. Hodge, *"Fission Gas Release and Pellet swelling Within the Capsule Assembly During Phase IV of the Average Power Test"*, ORNL/MD/LTR-184, Appendix A, July 2000.

2. M.Y. Chern, et. al., "*Small, Inexpensive Apparatus for the Determination of the Density of Powdered Materials*", Rev. Sci. Instrum. 61 (6), June 1990

4. DISTRIBUTION

1. P.T. Rhoads, U.S. Department of Energy, MD-3, 1000 Independence Avenue SW, Forrestal Building 6G-050, Washington DC 20585
2-6. R.C. Pedersen, Idaho National Engineering and Environmental Laboratory, EROB, 2525 Fremont Avenue, Idaho Falls, ID 83415-3419
7. P. Kasik, MPR Associates Inc., 320 King Street, Alexandria, VA 22314-3238
8. C.A. Baldwin
9. B.S. Cowell
10-14 S.A. Hodge
15-19 D.W. Heatherly
20. L.L. Horton
21. M.W. Kennard, Stoller Nuclear Fuel, 485 Washington Avenue, Pleasantville, NY 10570
22.-26. J.S. Tucker, Framatome Cogema Fuels, 3315 Old Forest Road, Lynchburg, Va 24506
27.-31. R.N. Morris
32. L.J. Ott
33. D.J. Spellman
34. K.R. Thoms
35. G.L. Yoder, Jr.
36. S.J. Zinkle
37. ORNL Laboratory Records (RC)