ORNL/TM - 2000/315

VACUUM SYSTEM MOCK-UP TESTING RESULTS

B. Damiano
R. E. Battle
M. E. Buchanan

Instrumentation and Controls Division
Oak Ridge National Laboratory*

Date Published - September 1999

*** Prepared by OAK RIDGE NATIONAL LABORATORY Oak Ridge, Tennessee 37831-6285 Managed by LOCKHEED MARTIN ENERGY RESEARCH CORP. For the U.S. DEPARTMENT OF ENERGY Under contract DE-AC05-96OR22464**

Table of Contents

List of Figures iii

List of Tables iv

1. INTRODUCTION 1

2. SYSTEM DESCRIPTION 2
- **2.1 Vacuum System Hardware Description** 2
- **1.2 Control System Description** 3

3. SYSTEM DEFICIENCIES AND THEIR CORRECTION 5
- **3.1 Flow Controller Instability** 5
- **3.2 Power Failure Test** 6
- **3.3 Flow Blockage and Blockage Removal** 7
  - **3.3.1 Unintentional Flow Blockages** 7
  - **3.3.2 Flow Blockage Tests** 8
- **3.4 Effect of System Leaks** 8

4. PREFILTER TESTS 9

5. OPERATING PROCEDURE INVESTIGATION 10
- **5.1 Operation using both Booster and Purge Flow** 10
  - **5.1.1 Purge Flow Started First, Followed by Booster Flow** 10
  - **5.1.2 Booster Flow Started First, Followed by Purge Flow** 11
- **5.2 Operation Using Purge Flow Only** 12
- **5.3 Operation using Booster Flow Only** 13
- **5. 4 Withdrawing all the ACB Charcoal in One Continuous Run** 14
- **5. 5 Comparison of Single and Multiple Run Operation** 15
- **5.6 Limestone and Charcoal Removal** 15
- **5.7 Recommended Operating Procedure** 17
- **5.8 Radon Trap Flow Test** 18

6. MISCELLANEOUS RESULTS 20

7. SUMMARY AND CONCLUSIONS 20

APPENDIX A 22

APPENDIX B 23

List of Figures

Figure 1. Diagram of the vacuum system mock up. 2
Figure 2. The Labview logic control panel. 4
Figure 3. The Labview process panel. 5
Figure 4. Charcoal/limestone loading of the ACB..... 16
Figure 5. Location of charcoal and limestone in the collector. 17
Figure 7. The radon trap test results. 19
Figure 6. Schematic diagram of the radon trap flow test setup..... 19
The spool piece, spool piece rack, and bottle station. 22
The collector and cyclone separator. 22
The vacuum motor. 22
The cold tap, ACB, and flow lines. 22

List of Tables

Table 1. Data from continuous runs lasting 20 s or greater. 14

Table 2. Short duration tests with 10 inches of limestone on top of 6 inches of charcoal..... 16

1. INTRODUCTION

This document summarizes the results of the vacuum system mock-up testing performed between June and September of 1998. The tests were performed to accomplish the following goals:

1. Exercise the system hardware and control system. Develop confidence that the system
will work adequately and reliably. Identify and correct system deficiencies.

2. Determine the effects of low-probability occurrences such as flow blockages and power failures. Evaluate ways to recover from such events.

3. Evaluate the effectiveness of system prefilters; select a prefilter.

4. Evaluate various operating procedures and determine a procedure for the charcoal removal operation.

5. Develop operator experience.

6. Determine an acceptable leak rate of the test system.

The vacuum system mock-up has been operated approximately 300 times. The system hardware and control system have proven to be very reliable; the mock-up testing has created a high level of confidence that the system is designed properly and will operate properly when installed at the MSRE.

A number of potential problems were identified and corrected during the testing. These problems included flow controller instability, the effects of system leaks, and flow blockage. The response of the system during these events was recorded and methods to recover from each were evaluated.

Several operating procedures have been investigated. All the procedures used in the mock-up testing have resulted in charcoal removal, however, each operating procedure has its advantages and disadvantages.

The vacuum system mock-up is described in the next section. System deficiencies and their correction are described in Section 3. Section 4 describes the prefilter tests. Section 5 presents the relative merits of the various operating procedures investigated during the mock-up testing and contains a recommended operating procedure for charcoal removal. Section 6 describes miscellaneous results and Section 7 presents conclusions drawn from the vacuum system mock-up tests.

2. SYSTEM DESCRIPTION

2.1 Vacuum System Hardware Description

A diagram of the vacuum system mock-up is shown in Figure 1. Pictures of the vacuum system mock up components are shown in Appendix A.
The initial mock-up equipment consisted of Spool Pieces 2A (purge gas injection), Spool

Piece 3 (booster gas injection), remotely operated ball valves SV-3A, SV-3B, SV-4A, SV-4B, a simulated auxiliary charcoal bed (ACB), a cyclone separator with

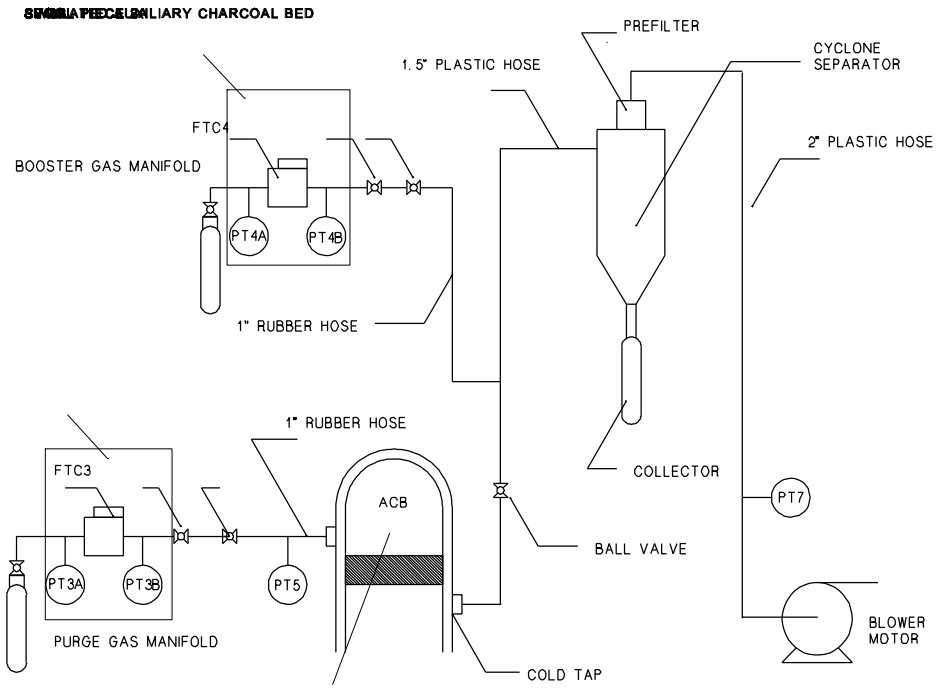

collector, and a Rotron Model DR 707 blower motor. Each spool piece contains a Tescom Model 64-3663TRL39 pressure reducing regulator, a Generant Model VRVI-750-SS-T-65 over pressure relief valve, a Tylan Model FC-2926KZ flow controller, and two Sensotec Model 415, 0 –150 psig pressure transducers, one upstream of the flow controller and the other downstream. The spool pieces and their associated remotely operated valves were mounted on separate spool piece stands that also served as bottle stations. The regulator outlet pressure was set at 55 psig. The outlet from each spool piece stand was connected to the system by using 1-inch pneumatic hose (0.75 inch ID) with Chicago couplings. A 1-inch ID plastic hose with cam-lok fittings connected the outlet of the cold tap to the cyclone separator inlet. This hose was changed to a 1.25-inch and finally to a 1.5-inch ID plastic hose. A prefilter is located in the cyclone separator immediately upstream of the separator outlet. A 2-inch ID plastic hose with cam-lok fittings connected the cyclone

separator outlet to the blower motor inlet. A by pass at the blower motor inlet was throttled to obtain an inlet suction pressure of 70 inches water vacuum. The blower motor discharge was routed outside the building.

1.2 Control System Description

The evacuation system is controlled by a combination of hardware and software. The hardware controllers include flow controllers that control the purge and booster gas flows, a keylock switch in series with an emergency shutdown switch that control power to the valve solenoids and to the blower control circuits. The output of these switches is input to the computer. The computer contains logic controlling the blower motor and the solenoid valves. The keylock switch ensures that the system cannot be operated without the key, and the emergency shutdown switch closes all solenoid valves and stops the blower motor independent of the computer.

The computer controls the solenoid valves and blower as implemented by operator action, displays measured parameters to the operator, and records the measured parameters to a file. The logic used to control the solenoid valves is depicted in Fig. 2. The computer screen graphic is in color, but shown in black and white in Fig. 2. The discussion about the logic is in terms of power flow. When a button or indicator is green (white box in Fig. 2), it is open and will not pass "power"; when it is red (black box in Fig. 2), it is closed and will pass "power." When a solenoid is green, it is de-energized; when it is red, it is energized. The blower operates in the following manner:

1. **The operator closes the hardware key switch and emergency switch, and the "Lock & Emergency" indicator on the computer graphic panel changes to red.**

2. **The operator presses the on/off "Emergency Stop" switch on the computer logic screen.**

3. **Press the momentary switch "Reset Power," and the "bus bar" is energized as indicated by the circular indicator light, which changes to red and the text changes to "Energized."**

4. **Pressing the "Blower On/Off" switch followed by the momentary switch "Reset Blower" on the computer graphic starts the blower. The blower will start only if the energize/de-energize light is red. The blower stops if this light changes to green.**

5. **The booster gas solenoid valves are controlled similarly except there is a single on/off button for both valves.**

6. **The purge gas starts in the same way as the booster gas except they are closed automatically by a timer. The operator sets the time for the valves to be open.**

After this time expires, as indicated by the "Run time (s)" indicator, the valves close.

7 The operator must close the booster gas solenoids and stop the blower manually.
8 Data are recorded to file as long as the "bus bar" indicator is red ("energized").

Alarms in the logic include the pressure at PT-5, the inlet to the ACB. If PT-5

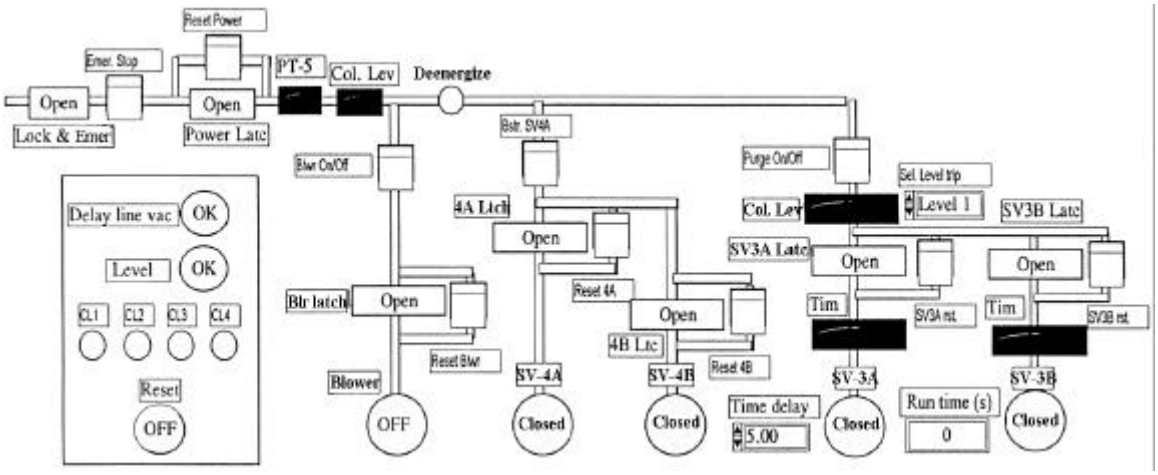

exceeds 30 psia, the system alarms, and the operator can decide by observing system operation whether to continue operation or to stop. The collector level alarms indicate that uranium-laden charcoal has covered the detector. There are alarms on each of the collector-level detectors that indicate when each level is reached.

A graphic of the system is shown in Fig. 3. It includes indicators that show which valves are open and closed, it shows the blower status, and it includes displays of the measured parameters. The measured parameters are the following:

PT-3A	Purge gas pressure (psig)
PT-3B	Purge gas pressure (psig)
PT-4A	Booster gas pressure (psig)
PT-4B	Booster gas pressure (psig)
PT-5	ACB inlet pressure (psia)
PT-7	Blower inlet vacuum (inches of water vacuum)
PT-7	Blower inlet (psia)
FTC-3	Purge gas flow (ft^3/min)
FTC-3 SP	Purge gas flow set point (ft^3/min) indicator not control
FTC-4	Booster gas flow (ft^3/min)
FTC-4 SP	Booster gas flow set point (ft^3/min) indicated not controlled
LT-1	Collector level 1 (volts)
LT-2	Collector level 2 (volts)
LT-3	Collector level 3 (volts)
LT-4	Collector level 4 (volts)

The measured and calculated parameters are recorded to file every second while the "bus bar" light shown in Fig. 2 is "Energized." The flow set point indicators

indicate the set point as adjusted on the RO-28 panel. The set points are not adjusted on the software screen. The RO-28 has one indicator, which indicates in

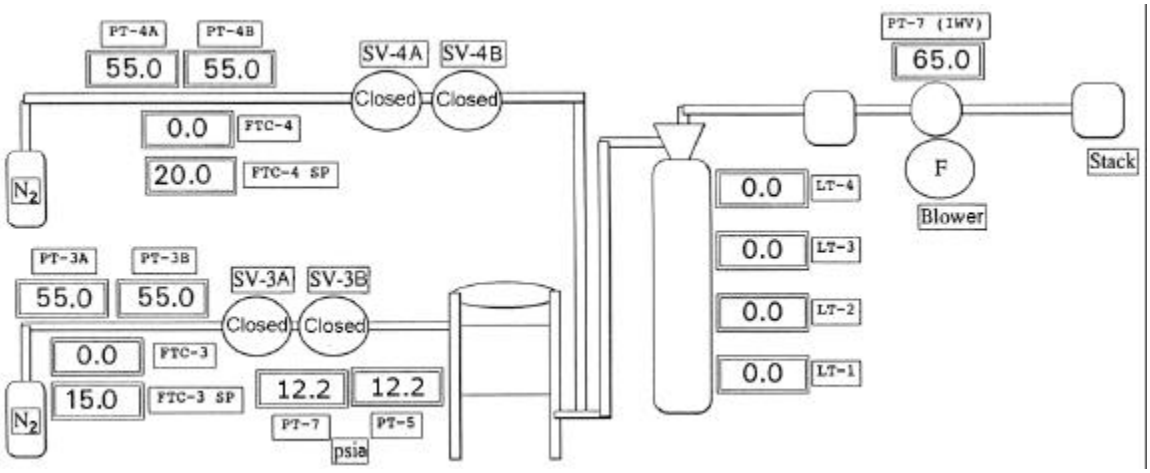

per cent, for the two flows and set points. The computer indicates flow simultaneously in ft^3/min.

The control system will be revised slightly at the MSRE to add control for additional valves and to provide a switch to select manual control or computer control. The additional valves include those needed for the two blower motors and for HEPA filter valves. The mode select switch will not affect logic in the computer, but will be an external switch that will enable or disable the computer control.

3. SYSTEM DEFICIENCIES AND THEIR CORRECTION

Sections 3, 4, 5, and 6 describe the most significant tests performed with the vacuum system mockup and present the test results. The conditions of each test run, test run results, and comments and observations made during the test runs are recorded in the vacuum system test log (Appendix B).

3.1 Flow Controller Instability

It was discovered that the Tylan flow controllers become dynamically unstable if the valves are opened in such a way that there is no pressure differential across the flow controller when flow begins. This flow instability is a normal characteristic of the flow controller and the manufacturer's instructions mention avoiding operating the flow controller with no pressure differential across the controller.

Unstable operation can occur if, taking spool piece 3 as an example, valve SV-4A is opened, valve SV-4B is closed, the flow controller is set to some non-zero flow rate, and the switch on the flow controller is set to the on position. Under this condition, the flow controller will attempt to match the flow set point, which causes the valve in the flow controller to fully open. The pressures on each side of the flow controller

are now equal and the controller experiences dynamic instability when valve SV-4B is opened to start flow.

A pressure differential across the flow controller can be maintained by turning the switch on the flow controller to the off position after setting the flow set point. Turning the switch off closes the valve in the flow controller, ensuring that there will be a pressure differential across the flow controller at the beginning of flow. The proper valve sequence beginning with valves SV-4A and SV-4B closed and the flow controller switch in the off position is as follows:

7. Turn on the flow controller and set the flow controller set point.

8. Turn off the flow controller.

9. Open valve SV-4A.

10. Open valve SV-4B.

11. The flow is initiated by turning the switch on the flow controller to the on position.

3.2 Power Failure Test

A test was performed to determine the effects of a power failure during the vacuuming operation and to determine the proper recovery procedure. The system was operated normally using both booster and purge gas. At approximately halfway through the purge gas flow, a power failure was simulated by tripping the manual emergency stop switch. This trip interrupted power to SV-3A, SV-3B, SV-4A, SV-4B, FTC-3 and FTC-4, which caused all of the solenoid operated valves to close. The vacuum run, which was removing charcoal in a normal fashion, immediately stopped, leaving a significant amount of charcoal in the vacuum hose connecting the ACB to the cyclone separator. The majority of this charcoal slid back through the vacuum hose into the pipe exiting the cold tap assembly.

An attempt was made to recover from the results of the simulated power failure by performing another normal vacuum run using both booster and purge gas flow. The charcoal was removed from the vacuum hose and additional charcoal was removed from the ACB. Thus, it appears that a power failure during a vacuum run will result in charcoal being left in the vacuum hose with the majority of the charcoal being located in the pipe exiting the cold tap assembly. Performing a normal run will remove this charcoal and put the vacuum system back in normal condition.

3.3 Flow Blockage and Blockage Removal

Flow blockages occurred occasionally throughout the testing. The first flow blockages were not anticipated, but provided valuable insight into how and where blockages occurred, what the indications of a blockage are, and what system modifications could be made to reduce the probability of a flow blockage. The later flow blockages were caused

intentionally to verify the effectiveness of earlier system modifications to prevent flow blockage and to investigate a procedure for blockage removal.

The strategy for flow blockage is of course to minimize its probability, however, it is recognized that the charcoal may contain clumps and, thus, the system may be subject to flow blockages. If a flow blockage occurs, the system is designed so that the most likely blockage location is at the hole cut through the side of the ACB by the cold tap cutting tool. This design goal is reached by ensuring that the smallest flow restriction occurs at the hole in the ACB (the elliptical hole in the ACB has a major diameter of 1.15 inches and a minor diameter of 0.94 inches). The advantage of a flow blockage occurring at the hole in the ACB is that an attempt to remove the blockage can be made by using the cold tap cutting tool. However, our experience removing a blockage with the cutting tool was that the blockage was only partially moved out of the hole and was immediately forced back into the hole blocking charcoal removal when the evacuation flow restarted. A blockage anywhere else in the vacuum system will not be accessible and would be difficult to remove.

Flow blockages have only occurred when the charcoal contained clumps.

3.3.1 Unintentional Flow Blockages

The earliest flow blockages were unanticipated and occurred during the initial "shake-down" runs. It was found that a flow blockage could occur in the ball valve installed in the exit pipe of the cold tap assembly. The blockages can be surprisingly hard to remove; shaking or banging the valve did not remove the blockage. The first blockage in the ball valve was removed only by disassembling the valve and chipping the blockage away.

The flow blockage in the ball valve occurred because there were charcoal clumps in the initial charcoal loading and because the flow path through the valve had a diameter of 0.75 inches, considerably less than the minor diameter of the hole in the ACB. The ball valve was replaced with a full-flow ball valve and plugging never occurred in the ball valve again.

Additional flow blockages occurred at the vacuum hose connection at the cyclone separator. Inspection showed a situation similar to that of the ball valve; the internal diameter of 0.75 inches of the hose coupling created a flow restriction. The 1 inch vacuum hose was replaced with a 1.25 inch vacuum hose to increase the coupling size and reduce the probability of a flow blockage. The booster gas connection at the cold tap assembly was also redesigned. In the initial design the booster gas entered the cold tap assembly perpendicular to the purge gas flow. In the new design the booster gas enters the cold tap assembly at an angle of approximately 60 degrees relative to the flow. This redesign reduces the momentum loss of the booster gas flow and should result in less disruption of the purge gas/charcoal stream.

Instrument readings during a flow blockage are easily interpreted. The measured flow in the affected line is far below the flow setpoint and the pressure upstream of the blockage is elevated.

3.3.2 Flow Blockage Tests

Flow blockage tests were performed by adding charcoal clumps to the ACB charcoal loading and attempting to remove them in the usual manner. These clumps were intended to cause a blockage at the hole in the ACB. The first test did cause a blockage, but the blockage occurred at the vacuum hose coupling at the exit of the cold tap assembly. In this blockage, a charcoal clump with an approximately square shape became lodged in the hose coupling. The distance across the corners of the charcoal clump was approximately 1.25 inches. To avoid similar future blockages, the vacuum hose size was again increased from 1.25 inches to 1.50 inches. Vacuuming test results indicate that sufficient flow velocity can be developed in a vacuum hose of this size.

After the 1.5-inch hose was connected to the cold tap assembly, approximately 40 clumps were added to the charcoal and limestone mixture. The clumps were made from a glue and charcoal mixture and were sized so that if they lined up with the hole in the ACB they would fit through, but some of the clumps had a dimension that was larger than the minor diameter of the hole in the ACB. The clumps were firm and difficult to break up. Few if any of these clumps made it through the hole in the ACB. Attempts to remove a blockage caused by the clumps with the tool that cut the hole in the ACB failed. The clumps were not broken up by the tool; it is speculated that the tool pushed them back into the ACB but that subsequent flow forced them to re-plug the hole. The charcoal/clump mixture could not be removed with the normal evacuation blower, purge gas, and booster gas. All the blockages occurred in the ACB and not in the lines to the cyclone separator.

Previous tests with clumps resulted in blockages in the exit other than in the hole in the ACB. Modifications of the hose sizes and coupling devices should allow any clump that passes through the ACB cold tap to go all the way to the cyclone separator. A blockage could occur only if a long thin clump that fit through the cold tap passed through the hole in the ACB and then rotated in the line. Its length could be such that it would not pass through the lines and hoses to the cyclone separator.

3.4 Effect of System Leaks

The effect of leaks in the purge line and in the connection between the cyclone separator and the collector were investigated. The results show that a purge line leak does not necessarily degrade system performance but is undesirable and that a collector leak must be avoided.

The purge line leak was simulated by removing the filler cap from the ACB. The system was operated using only the blower motor and the booster gas. Charcoal was removed from the ACB. Although charcoal was removed, operating with a purge gas line leak are inadvisable because it mixes oxygen with fine charcoal dust and because a flow blockage

downstream of the leak may result in charcoal dust being blown through the leak into the air. It is unlikely that a significant leak could exist undetected in the vacuum system.

The collector seal is critical for proper system operation. If this seal is poor, air will enter the flow stream through the cyclone separator. This unanticipated flow disrupts the flow in the separator and causes the charcoal to become suspended. The charcoal remains in the separator until the purge flow, booster flow, and blower motor are turned off; the charcoal then falls from the separator into the collector. The result of the charcoal being suspended in the separator is an unusually high prefilter loading.

4. PREFILTER TESTS

Two prefilters were tested; the first was an oil-coated fibrous filter and the second was a miniature HEPA filter. The effectiveness of the filters was determined by weighing each filter before use, installing the filter and then running the vacuum system to remove one charcoal loading from the ACB, and then weighing the filter again to determine the amount of charcoal captured by the filter. The pressure drop between PI-5 and PI-7 was monitored to determine if the prefilters caused significant pressure drops. System performance with a prefilter made from a piece of high-flow laboratory filter paper was also investigated.

Three oil-coated fibrous filters were tested. The first filter collected 4.2 grams of charcoal and the second filter collected 3.7 grams of charcoal. No significant dust was seen in the exhaust during the runs and no significant pressure drop occurred across either filter. The filters were badly discolored by charcoal dust. During the test with the third fibrous filter, a collector leak occurred, suspending the charcoal in the cyclone separator. The third fibrous filter collected 27 grams of charcoal.

The HEPA filter collected 4 grams of charcoal during the single run it was tested. No significant dust was seen in the exhaust during the run and no significant pressure drop occurred across the filter. The exterior of the filter was covered by charcoal dust.

The HEPA filter was left in the outlet of the cyclone separator for approximately 60 runs. The pressure drop across the filter increased to approximately 2 psi. This pressure drop was measured from the inlet to the ACB (PT-5) and the inlet to the blower (PT-7). The filter was removed and the bag covering the filter was cleaned. After cleaning the filter cover bag, the pressure drop was only a few tenths of a psi.

The laboratory filter paper plugged almost immediately when used as a prefilter. A pressure drop of approximately 10 psi was developed across the filter paper. No charcoal was removed.

Prefilters located immediately downstream of the cyclone separator have a much smaller surface area than the HEPA filter further downstream. If for some reason

excessive charcoal bypasses the cyclone separator, the prefilter is much more likely to become clogged such that flow can be blocked. Flow blockage in the prefilter did not occur in our tests, but this issue should be considered. The pressure drop across the prefilter cannot be measured, but the pressure drop across the HEPA filter is measured. If the HEPA filter is becoming blocked, the blockage will be indicated by the pressure drop across the filter.

5. OPERATING PROCEDURE INVESTIGATION

Several potential operating procedures and their characteristics are summarized in each subsection.

5.1 Operation using both Booster and Purge Flow

The procedures in this subsection use both booster and purge flow. The differences between procedures involve the order in which the gas flows are started.

5.1.1 Purge Flow Started First, Followed by Booster Flow

<u>Procedure</u>

12. Set the setpoint of FTC-3 (purge flow controller). Switch controller valve off.

13. Set the setpoint of FTC-4 (booster flow controller). Switch controller valve off.

14. Set flow time for purge flow.

15. Start the blower motor and allow system pressures to reach equilibrium.

16. Open valves SV-3A and SV-3B.

17. Open valves SV-4A and SV-4B.

18. Start the purge flow by switching FTC-3 on.

19. Start the booster flow by switching FTC-4 on.

20. After valves SV-3A and SV-3B automatically close, allow booster flow to reach equilibrium as measured by pressure indicators PI-5 and PI-7.

21. Manually close valves SV-4A and SV-4B.

22. Shut off the vacuum pump.

Advantages

No charcoal will be removed from the ACB until the purge gas is started. There is a high probability that the removed charcoal will come from the section of the ACB between the purge gas inlet and the cold tap.

The booster flow will ensure that the vacuum hose is swept clean at the end of the run.

The flow controllers are stable when the valves are operated in the recommended sequence.

The charcoal can be removed in one run if desired.

Disadvantages

The cyclone separator will experience a flow transient; the transient flow will carry charcoal.

5.1.2 Booster Flow Started First, Followed by Purge Flow

Procedure

23. Set the setpoint of FTC-3. Switch controller valve off.

24. Set the setpoint of FTC-4. Switch controller valve off.

25. Set flow time for purge flow.

26. Start the blower motor and allow system pressures to reach equilibrium.

27. Open valves SV-3A and SV-3B

28. Open valves SV-4A and SV-4B

29. Start the booster flow by switching FTC-4 on. Allow the flow to reach equilibrium.

30. Start the purge flow by switching FTC-3 on.

31. After valves SV-3A and SV-3B automatically close, allow booster flow to reach equilibrium as measured by pressure indicators PI-5 and PI-7.

32. Manually close valves SV-4A and SV-4B.

33. Shut off the vacuum pump.

Advantages

The cyclone separator experiences less transient flow compared to the procedure described in subsection 5.1.1.

The booster flow ensures that the vacuum hose is swept clean at the end of the run.

The valve sequence makes flow controller instability unlikely.

The charcoal can be removed in one run if desired.

Disadvantages

Charcoal will be removed from the ACB before the purge gas is started. Depending on the transient severity during the booster gas startup, there may be a significant amount of charcoal removed. There is a possibility that the removed charcoal may come from the section of the ACB below the cold tap, because most of the mass flow during the transient will originate from the portion of the ACB below the cold tap.

5.2 Operation Using Purge Flow Only

Procedure

34. Set the setpoint of FTC-3. Switch controller valve off.

35. Set the setpoint of FTC-4 to zero. Switch controller valve off.

36. Set flow time for purge flow.

37. Start the blower motor and allow system pressures to reach equilibrium.

38. Open valves SV-3A and SV-3B.

39. Start the purge flow by switching FTC-3 on.

1. After valves SV-3A and SV-3B automatically close, allow system to reach equilibrium as measured by pressure indicators PI-5 and PI-7.

2. Shut off the vacuum pump.

Advantages

No charcoal will be removed from the ACB until the purge gas is started. There is a high probability that the removed charcoal will come from the section of the ACB between the

line 561 inlet and the cold tap. The valve sequence makes flow controller instability unlikely. Charcoal can be removed in one run if desired.

Disadvantages

The lack of booster flow leaves charcoal in the vacuum hose at the end of the run unless all the charcoal is removed from the ACB.

There will be less flow to carry the charcoal through the vacuum hose. The gas velocity in the cyclone separator will operate further from its design point.

The cyclone separator experiences more of a flow transient; the transient flow will carry charcoal.

5.3 Operation using Booster Flow Only

Procedure

40. Set the setpoint of FTC-4 Switch controller valve off.

41. Set the setpoint of FTC-3 to zero. Switch controller valve off.

42. Start the blower motor and allow system pressures to reach equilibrium.

43. Open valves SV-4A and SV-4B.

44. Start the booster flow by switching FTC-4 on.

45. Manually time the booster flow; when the allotted time has passed manually close valves SV-4A and SV-4B.

46. Allow system to reach equilibrium as measured by pressure indicators PI-5 and PI-7

47. Shut off the vacuum pump.

Advantages

The booster flow ensures that the vacuum hose is swept clean at the end of the run.

The valve sequence makes flow controller instability unlikely.

Less flow to hold up for radon decay than the cases that also use purge flow.

Disadvantages

Charcoal will be removed from the ACB during the transient when the booster gas is started. The amount of charcoal removed will depend on the transient severity. There is a possibility that the removed charcoal may come from the section of the ACB below the cold tap, because most of the mass flow during the transient will originate from the portion of the ACB below the cold tap.

It may require many runs to remove all the charcoal from the ACB.

There will be less flow to carry the charcoal through the vacuum hose. The cyclone separator will operate farther from its design point.

The cyclone separator will experience a relatively severe transient; the transient flow will transport charcoal.

5. 4 Withdrawing all the ACB Charcoal in One Continuous Run

Tests were conducted to determine the run length required to remove all the charcoal from the ACB in one continuous run. Several time periods were selected and tested?**20 s, 25 s, and 30 s. The material used in the tests described here was a mixture of charcoal and limestone. The results of these tests follow:**

Table 1. Data from continuous runs lasting 20 s or greater.

Run No.	Purge flow (SCFM)	Booster flow (SCFM)	Run time (s)	Charcoal added to Collector (in)	Total in ACB (in)
1a	15	20	30	35	35
1b	15	20	10	_	35 _
1c	15	20	10	_	35 ¼
2a	15	20	20	35 ½	35 ½
2b	15	20	20	1 ¼	36 ¾
3a	15	20	30	34 ½	34 ½
3b	15	20	30	_	35 _
4a	15	20	30	37 ¼	37 ¼
4b	15	20	30	0	37 ¼

One continuous run collects almost all the charcoal from the ACB, but a subsequent run collects a small amount of dust and a few particles. There is some variability in the amount of charcoal measured in the collector between runs. For the tests in Table 1, the ACB was refilled from the collector without adding more charcoal. However, the measured amount of charcoal varied between runs. This is at least partially caused by the compaction of the charcoal. For example, the collector charcoal level was measured to be 36 inches. The collector was removed to examine the connections to the cyclone separator and reattached. The level then was measured to be 35 ½ inches.

The way in which the charcoal uncovers the hole in the ACB may be another reason that the amounts of charcoal collected vary. Although we could not observe the

charcoal as it exited the ACB, we used a boroscope to observe the charcoal remaining in the ACB after a run. The charcoal sloped from the side opposite the cold tap down to the cold tap. The way in which the charcoal exits the ACB may affect how steep this slope is. During operation, charcoal is removed as long as the cold tap in the ACB is covered. However, when it is uncovered, much of the purge gas flows through the hole in the ACB without carrying charcoal with it. This hole may be uncovered sooner in some tests than in others affecting how much charcoal is removed from the ACB. However, because the cold tap is approximately 6" below the bottom of the uranium-laden charcoal, this variation in the amount of charcoal should still result in complete collection of the uranium-laden charcoal.

5. 5 Comparison of Single and Multiple Run Operation

There are advantages and disadvantages to both single and multiple run operation. Removing all the charcoal in one run is appealing because it minimizes the number of transients the system experiences, minimizes the number of opportunities for operator and equipment error, and once the charcoal is moving, it keeps moving until the operation is complete. The disadvantage of a single run is that the consequences of any unsuspected occurrence are not minimized by a short run. For example, if charcoal is removed from below the cold tap, (a very unlikely prospect), the collector can be overfilled in a long single run. This overfilling is less likely to occur if multiple short runs are used.

The advantage of multiple short runs is that the charcoal removal process can be monitored more closely, thoroughly, and without the time pressures that would be present in a single long run. The multiple runs make equipment malfunction more likely, but this is a relatively minor concern considering the equipment performance record compiled during vacuum system testing.

5.6 Limestone and Charcoal Removal

Tests were run with 10 inches of limestone on top of 6 inches of charcoal to observe how the collector was filled. The setting for one test were 15 SCFM of purge gas, 20 SCFM of booster gas, and runtime was 20 s. This was followed with a second run of 5 s and a third of 10 s with the same flows. A qualitative description of the order in which the limestone and charcoal were loaded into the collector is shown in Fig. 4. The bottom 14 inches of the collector was mostly charcoal. The middle 17 inches from the 14 inche level to 31 inche level on the collector was mixed limestone and charcoal, and the top 5 inches contained mixed charcoal and limestone. In this case the top 5 inches was a little whiter than the bottom 14 inches. The ACB was filled the same as above, but six short duration tests were done instead. The collector fill for these tests is shown in Table 2. A sketch showing how the collector filled for these tests is shown in Fig. 5. (Approximately 4 ½ inches of charcoal was not replaced in the ACB for this test.) The limestone and charcoal were mixed in the bottom of the collector. In the middle of the collector, there was mostly limestone with some charcoal, and at the top of the collector there was mostly charcoal with

only a little limestone. For the several short duration tests the limestone was more concentrated in the middle than for the one long run. In the long run, the limestone was distributed more evenly in the middle and in the top.

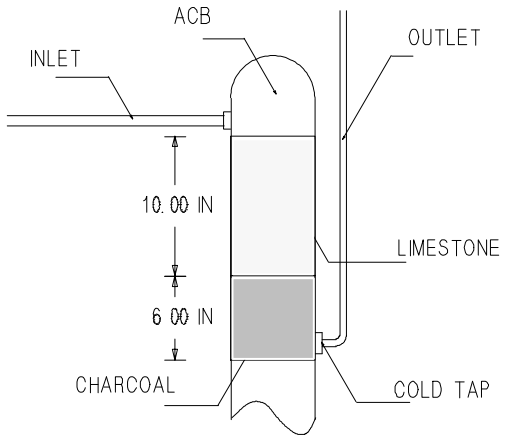

Table 2. Short duration tests with 10 inches of limestone on top of 6 inches of charcoal.

Run No.	Purge flow (SCFM)	Booster flow (SCFM)	Run time (s)	Charcoal added to Collector (in)	Total in ACB (in)
1a	15	20	5	9 ½	9 ½
1b	15	20	5	7 _	17 _
1c	15	20	5	7 _	24 ¼
1d	15	20	5	4 ¼	28 ½
1e	15	20	10	1	29 ½
1f	15	20	10	¼	29 ¾

5.7 Recommended Operating Procedure

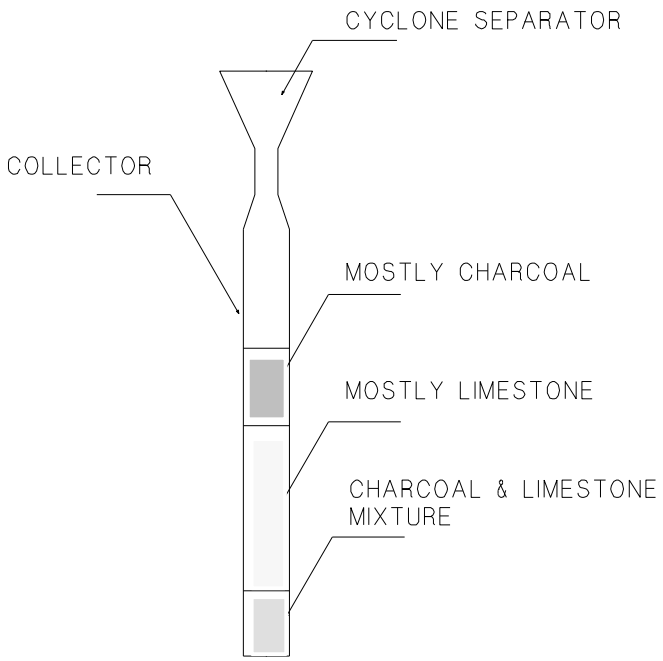

Consideration of the advantages of the various operating procedures examined during vacuum system testing and consideration of the advantages and disadvantages of single or multiple run operation lead to the following recommended vacuum system operating procedure.

We recommend a single run of 30 seconds purge flow duration. The recommended operating procedure uses both booster and purge gas flow. The purge gas flow is started before the booster gas flow to prevent charcoal from being removed from the ACB before the purge gas flow begins. The complete procedure is as follows.

48. Close valves on the gas bottles.

49. Set pressure reducing regulators for 0 psi outlet pressure.

50. Turn off system power.

51. Turn flow controller valve switch to the off position.

52. Turn on system power.

53. Open valves on gas bottles.

54. Set the outlet pressure on both pressure reducing regulators to 55 psig.

55. Turn the controller valve switch of FTC-3 to the on position. Set the setpoint of FTC-3 to 15 SCFM.

56. Turn the controller valve switch of FTC-4 to the on position. Set the setpoint of FTC-4 to 20 SCFM. Switch FTC-4 controller valve switch off.

57. Set flow time for purge flow to 30 seconds.

58. Start the blower motor and allow system pressures to reach equilibrium. Note that it is impossible to know the equilibrium pressure in advance of operation because the actual vacuum curve and the system leak rate are unknown.

59. Open valves SV-4A and SV-4B.

60. Open valves SV-3A and SV-3B.

61. Immediately start the booster flow by switching FTC-4 controller valve on.

62. After valves SV-3A and SV-3B automatically close, allow booster flow to continue for 10 seconds to sweep charcoal from the vacuum hoses.

63. Close valves SV-4A and SV-4B.

64. Shut off the vacuum pump.

5.8 Radon Trap Flow Test

A test was performed to determine if the radon trap, which is located between the vacuum motor and the HEPA filter, will cause an unacceptably large pressure drop. The test system consisted of one EG&G Rotron model 505 regenerative blower, a flow meter, the radon trap (fully loaded with the charcoal trap media), a pressure transducer, and a throttle valve to regulate the flow. The schematic diagram of the test setup is shown in Figure 6. The test consisted of adjusting the throttle valve to achieve a desired flow and recording the pressure at the inlet to the charcoal trap. A comparison of the test results with manufacturer's data is shown in Figure 7.

The test results show that the radon trap reduces the head for a given flow rate. This head reduction is negligible at low flow rates but becomes significant (~ 25 inches of water) for flow rates greater than 100 SCFM. The amount of head reduction seen at the operating point, approximately 4 inches of water, will not adversely affect the performance of the vacuum system. Thus, it can be concluded from this test that the radon trap does not cause sufficient pressure drop to affect vacuum system operation.

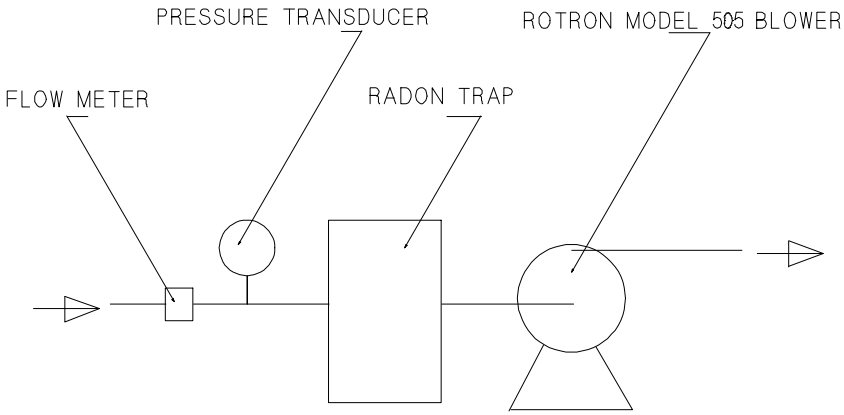
PRESSURE TRANSDUCER
ROTRON MODEL 505 BLOWER
FLOW METER
RADON TRAP

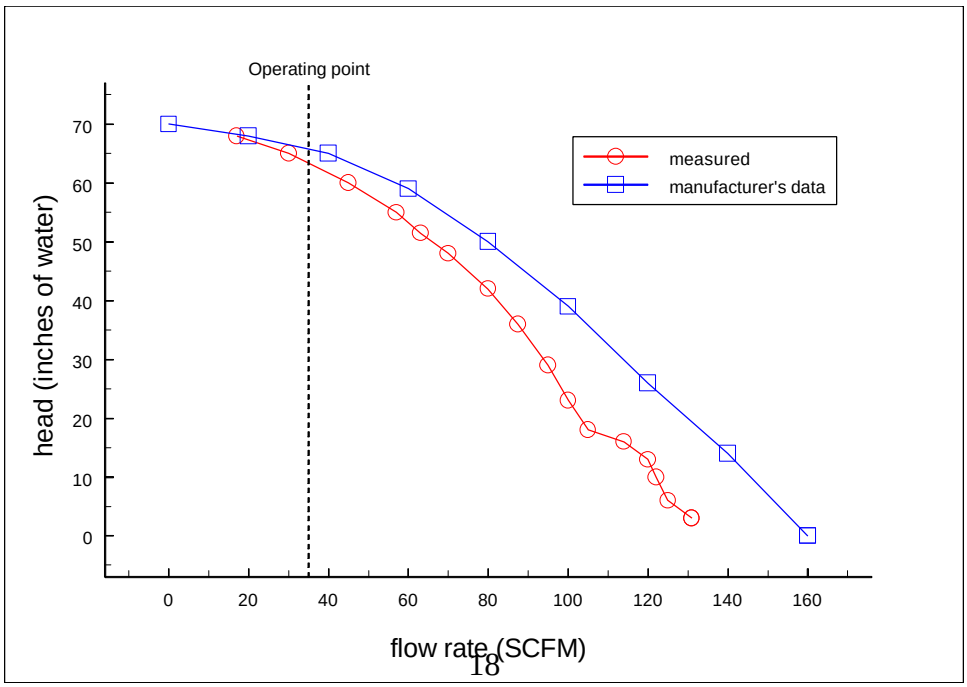
Operating point
measured
manufacturer's data
head (inches of water)
flow rate (SCFM)
0
10
20
30
40
50
60
70
0
20
40
60
80
100
120
140
160

6. MISCELLANEOUS RESULTS

This section lists miscellaneous results obtained during the vacuum system mock up tests.

65. The system appears to be well designed and works well. No equipment problems have been experienced during the vacuum testing.

66. The Labview-based operating system has been reliable.

67. There will be virtually no pressure differential between PI-5 and PI-7 when the ACB is empty. The difference between these pressure indications can be used to indicate when all the charcoal has been removed from the ACB.

68. The charcoal can be effectively removed with much lower flow velocities than originally predicted. Initial calculations indicated that flow velocities of approximately 100 ft/sec would be required to remove the charcoal. Satisfactory results have been obtained with flow velocities as low as 18 ft/sec. This result allows the use of vacuum hose sizes larger than originally specified.

69. The minimum flow rate at which charcoal can be reliably removed is 7 SCFM nitrogen purge flow. This flow rate corresponds to a flow velocity in the vacuum hose of 15 ft/sec

70. The maximum flow rate through the spool pieces appears to be 25 SCFM. The flow is limited by the mass flow rate that can pass through the pressure reducing regulators.

71. Charcoal is removed from the ACB during the booster gas start-up transient.

72. The pressure reducing regulator should be set to 55 psig. Lower pressures can be used, but these lower pressures result in longer transients during gas flow startup.

73. The vacuum system mock up leak rate was measured at 1.75 standard cubic feet per hour. The system worked well with this rate of leakage.

7. SUMMARY AND CONCLUSIONS

The most significant conclusion that can be drawn from the vacuum system mock up testing is that the vacuum system works as designed and can be used to move the charcoal from the ACB to the collector. The charcoal must be granular or powdery, and must not contain large clumps. If clumps are present, the charcoal may still be removed from the ACB, but the amount of effort required for its removal will be greatly increased. Other conclusions are listed below.

The vacuum system operating procedure recommended in Section 5 should be used during the charcoal removal operation. This procedure has worked well during mock-up testing and minimizes the possibility of experiencing flow controller instability. The pressure differential between PI-5 and PI-7 becomes negligible when the ACB is empty.

The system is well designed and constructed. It operates reliably. The gas supply system provides sufficient and well controlled gas flow at a maintainable pressure. The vacuum system has ample capacity even with the radon trap present. The instrumentation is adequate and the measurements are clearly displayed. The Labview-based control system is intuitive, works reliably, and is recommended for use during the charcoal removal operation.

Flow blockage is a real possibility. T he system has been modified so that if flow blockage occurs, it will occur at the hole in the ACB. Flow blockages will be difficult to remove. Plugging is indicated by flow not reaching the flow controller setpoint and by a high pressure reading at the PI-5, PI-3B, or PI-4B.

Either a fibrous filter or a HEPA filter are acceptable choices for the system prefilter.

Leakage at the seal between the cyclone separator and the collector must be avoided. Such leakage causes the charcoal to become suspended in the cyclone separator, reducing separator efficiency and loading the prefilter. Leakage at other locations does not have as severe effects on the vacuuming operation but should be avoided to minimize the probability of charcoal dust escaping from the vacuum system.

APPENDIX A
VACUUM SYSTEM MOCK UP COMPONENT PICTURES

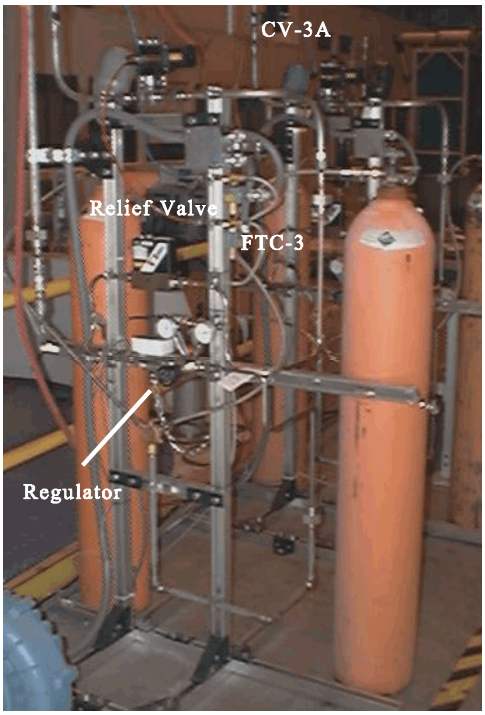

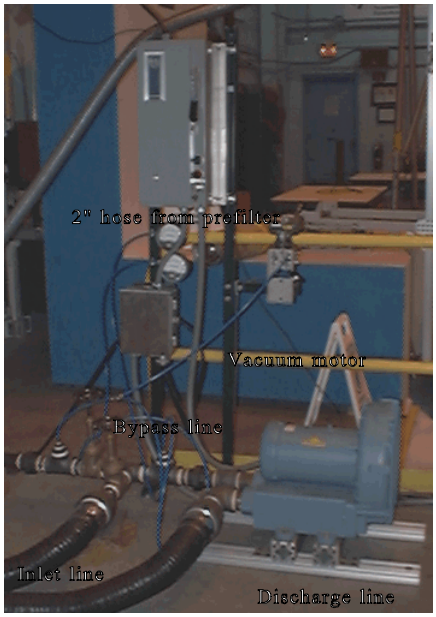

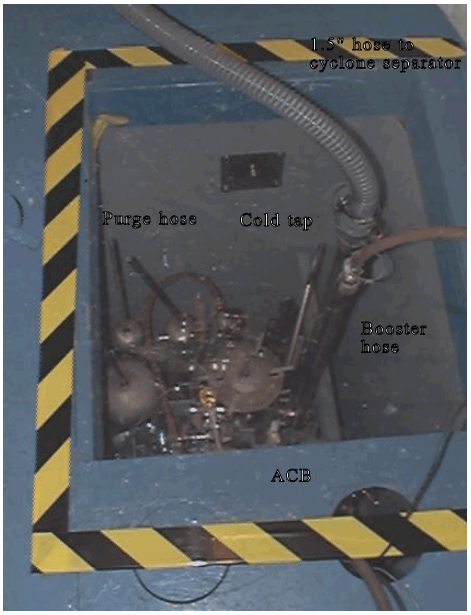

APPENDIX B
VACUUM SYSTEM TEST LOG

Vacuum Test Data Sheet

Date: 6/26/98

Run	Purge Flow		Booster Flow		Charcoal Height	File Name	Comm
	Flow SP	Duration	Flow SP	Duration			
1	20	5	0	0	11	VDR626981.txt	
2	20	5	0	0	17¾	VDR626981.txt	
3	20	5	0	0	21½	VDR626981.txt	
4	20	5	0	0	27¼	VDR626981.txt	
5	20	5	0	0	31	VDR626981.txt	
6	20	5	0	0	36½	VDR626981.txt	
7	20	20	0	0	37½	VDR626981.txt	AC
8	15	5	20	NA	11½	VDR626982.txt	
9	15	5	20	NA	22½	VDR626982.txt	
10	15	5	20	NA	31¾	VDR626982.txt	
11	15	5	20	NA	34¾	VDR626982.txt	
12	15	5	20	NA	35¾	VDR626982.txt	
13	15	15	20	NA	36½	VDR626982.txt	AC
14	15	5	30	NA	11.25	VDR626983.txt	Only got to 20 S inlet pressure (
15	15	5	30	NA	22¾		
16	15	5	30	NA	33¼		

17	15	10	30	NA	35	VDR626983.txt	AC

Vacuum Test Data Sheet

Date: 6/30/98

Run	Purge Flow		Booster Flow		Charcoal Height	File Name	Comm
	Flow SP	Duration	Flow SP	Duration			
1	15	5	0	0	5½	VDR630982.txt	
2	15	5	0	0	12	VDR630982.txt	Runs 1-6 all r
3	15	5	0	0	22½	VDR630982.txt	used
4	15	5	0	0	32¼	VDR630982.txt	
5	15	5	0	0	35	VDR630982.txt	
6	15	15	0	0	36½	VDR630982.txt	AC
7	0	0	20	NA		VDR630983.txt	Folded booste
8	15	5	0	NA	6½		
9	15	5	0	NA	11¼		
10	15	5	0	NA	19		
11	15	5	0	NA	31¼		
12	15	5	0	NA	34½		
13	15	15	0	NA	36	VDR630986.txt	AC
14	15	5	0	NA	0	VDR630987.txt	Plugged at inlet removed from
15	0	NA	20	NA	12		
16	15	5	0	NA	22		

17	15	5	0	NA	33¾		
18	15	5	0	NA	36		Plugged a
19	15	5	0	0	36¼		Plugged a
20	0	NA	20			VDR630988.txt	Got
21	0	NA	20				

Vacuum Test Data Sheet

Date: 7/1/98

Run	Purge Flow		Booster Flow		Charcoal Height	File Name	Comm
	Flow SP	Duration	Flow SP	Duration			
1	5	15	0	NA	7¼	VDR71982.txt	No
2	2.5	15	0	NA	9½	VDR71982.txt	Charcoal
3	1	30	0	NA	9¾	VDR71982.txt	Charcoal
4	2	20	0	NA	10	VDR71982.txt	Charcoal
5	2.5	20	0	NA	12	VDR71982.txt	Charcoal
6	2.5	30	0	NA	12¼	VDR71982.txt	Charcoal
7	2.5	30	0	NA	17½	VDR71982.txt	Leaves some separato
8	2.5	30	0	NA	17½	VDR71982.txt	Cleared out sep (no
9	2.5	30	0	NA	17½	VDR71982.txt	
10	0	NA	20	10s?	26	VDR71982.txt	Blew
11	5	15	0	NA	35	VDR71982.txt	No

12	**5**	**15**	**0**	**NA**	**36¼**	**VDR71982.txt**	**AE**

Purge flow rates <5 SCFM will not reliably move charcoal

Vacuum Test Data Sheet
(Modified Vacuum System)
Date: 8/3/98

Run	Purge Flow		Booster Flow		Charcoal Height	File Name	Comm
	Flow SP	Duration	Flow SP	Duration			
1	15	5	0	0	8¾	VDR83982.txt	1¼” hose & cold s
2	15	5	0	0	17½	VDR83982.txt	Still is of “bayon re
3	15	5	0	0	31"	VDR83982.txt	New charc
4	15	5	0	0	37½	VDR83982.txt	
5	15	15	0	0	38¾	VDR83982.txt	AC

Vacuum Test Data Sheet

Date:8/4/98

Run	Purge Flow		Booster Flow		Charcoal Height	File Name	Comm
	Flow SP	Duration	Flow SP	Duration			
1	5	15	0	NA	2¾	VDR84982.txt	
2	5	15	0	NA	6"		Flo
3	10	10	0	NA	23½		
4	7.5	10	0	NA	35		
5	7.5	15	0	NA	36¼		
6	7.5	10	10		37_	VDR84982.txt	ABC emp
7	7.5	10	0	NA	4½	VDR84985.txt	
8	7.5	10	0	NA	13½	VDR84985.txt	
9	7.5	10	0	NA	26	VDR84985.txt	
10	7.5	10	0	NA	34½	VDR84985.txt	
11	7.5	10	0	NA	35	VDR84985.txt	
12	7.5	10	10	NA	36½	VDR84985.txt	ACB em
13	0	NA	10	NA		VDR84985.txt	

Appears that 7.5 SCFM purge flow is minimum acceptable flow rate.

Vacuum Test Data Sheet

Date: 8/5/98

Run	Purge Flow		Booster Flow		Charcoal Height	File Name	Comm
	Flow SP	Duration	Flow SP	Duration			
1	15	5	15	NA	21½	VDR85981.txt	Booster sta
2	15	5	15	NA	35	VDR85981.txt	
3	0	NA	15	NA	35½	VDR85981.txt	A(

Vacuum Test Data Sheet

Date:8/6/98

Run	Purge Flow		Booster Flow		Charcoal Height	File Name	Comm
	Flow SP	Duration	Flow SP	Duration			
1	0	NA	20	10	3"	VDR86981.txt	Attempt to remo
2	0	NA	20	10	5½”	VDR86981.txt	Charcoal is rer initial boo
3	0	NA	20	10	8"	VDR86981.txt	
4	0	NA	20	5	10½	VDR86981.txt	
5	0	NA	20	5	13	VDR86981.txt	
6	0	NA	20	5	15½	VDR86981.txt	
7	0	NA	20	5	18¼	VDR86981.txt	
8	0	NA	20	5	21	VDR86981.txt	
9	0	NA	20	5	24¼	VDR86981.txt	
10	0	NA	20	5	27	VDR86981.txt	
11	0	NA	20	5	29	VDR86981.txt	
12	0	NA	20	5	32	VDR86981.txt	
13	0	0	20	5	33½	VDR86981.txt	
14	0	0	20	5	34½	VDR86981.txt	
15	0	0	20	5	35¼	VDR86981.txt	
16	0	0	20	5	35¾	VDR86981.txt	
17	0	0	20	5	35_	VDR86981.txt	
18	0	0	20	5	36	VDR86981.txt	Charcoal was 24 cold tap hole is 2

							plug thus, the cha cold tap hole.

Vacuum Test Data Sheet

Date: 8/6/98 continued

Run	Purge Flow		Booster Flow		Charcoal Height	File Name	Comm
	Flow SP	Duration	Flow SP	Duration			
19	Leak	NA	20	5	3¾		
20	Leak	NA	20	5	8		
21	Leak	NA	20	10	11_		
22	Leak	NA	20	10	15¾		
23	Leak	NA	20	10	19		PT-
24	Leak	NA	20	10	23		
25	15	5	20	NA	17¾	VDR86985.txt	
26	15	5	20	NA	32	VDR86985.txt	Chat
27	15	5	20	NA	35½	VDR86985.txt	Chat

Steps 19-21 Procedure: These test attempted to simulate a leak in the purge line upstream of the ACB. FTC-3 open) and SP-3 inlet pressure was set approximately to atmospheric pressure. The blower was started and rea the purge valves were opened establishing the "leak". The booster flow was started and ran for the indicated t

Steps 22-24 Procedure: Same as 19-21 except "leak" started before blower.

Vacuum Test Data Sheet

Date: 8/7/98

Run	Purge Flow		Booster Flow		Charcoal Height	File Name	Comments &
	Flow SP	Duration	Flow SP	Duration			
1	0	NA	20	5	0	VDR87982.txt	Purge line disconnected to sim vacuum motor
2	0	NA	20	5	0	VDR87982.txt	same at (1)
3	0	NA	0	0	0	VDR87982.txt	Vacuum motor only purge lin suction at open purge line.
4	0	NA	0	NA	0	VDR87982.txt	Same at (3)
5	0	NA	20	-5	8"	VDR87982.txt	Purge line disconnected. Vacu
6	0	NA	20	10	17"	VDR87982.txt	
7	0	NA	20	10	26½	VDR87982.txt	
8	0	NA	20	10	33¼	VDR87982.txt	Vacuum motor removed some gas flow started.
9	0	NA	20	10	34¾	VDR87982.txt	Significant suction felt at the c
10	15	10	20	NA	37"	VDR87982.txt	Purge on first, booster flow un ACB empty.
11	15	10	20	NA	24¼	VDR87983.txt	Booster flow "chattered" didn
12	15	10	20	NA	37¼	VDR87983.txt	Worked OK.
13	15	10	20	NA	30½	VDR87984.txt	
14	15	10	20	NA	38½	VDR87984.txt	ACB empty.

15	15	15	20	NA	38"	VDR87984.txt	ACB empty.

Vacuum Test Data Sheet

Date: 8/11/98

Run	Purge Flow		Booster Flow		Charcoal Height	File Name	Comm
	Flow SP	Duration	Flow SP	Duration			
1	35	10	35	NA	31½”	VDR811981.txt	FTC-4-24 SCF
2	25	10	25	NA	33"	VDR811981.txt	
3	25	10	25	NA	34"	VDR811981.txt	
4	25	10	0	NA	34¾”	VDR811981.txt	
5	15	10	NA	NA	35"	VDR811982.txt	A
6	15	10	25	NA	28½	VDR811982.txt	
7	15	10	25	NA	32	VDR811982.txt	
8	15	10	0	NA	33½	VDR811982.txt	
9	15	10	0	NA	34¼	VDR811982.txt	No pressure drop appears to be em
10	15	15	0	NA	34½	VDR811982.txt	A
11	15	15	20	NA	25	VDR811983.txt	Little flow of cha after purge flow t
12	15	15	20	NA	26	VDR811983.txt	Vacuum only: ge vacuum. Possible
13	15	10	20	NA	26	VDR811983.txt	Booster flow turn come close to equ flow turned on.
14	0	NA	0	NA	26	VDR811983.txt	Adjusted

Vacuum Test Data Sheet

Date: 8/12/98

Run	Purge Flow		Booster Flow		Charcoal Height	File Name	Comme
	Flow SP	Duration	Flow SP	Duration			
1	15	10	0	NA	24½	VDR812982.txt	Filter test; separator entered collector aft
2	10	10	0	NA	33	VDR812983.txt	
3	7.5	10	0	NA	33	VDR812983.txt	
4	7.5	10	0	NA	33	VDR812983.txt	
5	10	10	0	NA	34	VDR812983.txt	
6	15	10	0	NA	17¼”	VDR812984.txt	Filter test
7	15	10	0	NA	34	VDR812984.txt	Filter test
8	15	10	0	NA	28_	VDR812984.txt	Tightened connectio
9	15	10	0	NA	34¼	VDR812985.txt	
10	15	10	0	NA	35¾	VDR812985.txt	
11	15	15	20	NA	33	VDR812986.txt	Booster started first
12	15	10	0	NA	34½	VDR812986.txt	
13	15	10	20	NA	35¼	VDR812986.txt	
14	15	10	20		31¼”	VDR812986.txt	
15	15	10	20		34	VDR812986.txt	
16	15	10	20		25"	VDR812986.txt	Left collector with le up in separator unti stopped. Got ~ 46" v

Run 1-5: 28.11 grams captured by prefilter; 0.6 grams on outlet filter; 20 grams on inlet filter.

Vacuum Test Data Sheet

Date: 8/13/98

Run	Purge Flow		Booster Flow		Charcoal Height	File Name	Comm
	Flow SP	Duration	Flow SP	Duration			
1	15	15	20	Started at same time as purge	34½	VDR813981.txt	worked
2	15	15	20	Started at same time as purge	36	VDR813981.txt	worked
3	15	15	20	Started at same time as purge	35½	VDR813982.txt	worked
4	15	10	20	Started at same time as purge	36½	VDR813982.txt	worked

Run 1&2: 4.02 grams charcoal on prefilter.

Run 3&4: 3.77 grams charcoal on prefilter.

Vacuum Test Data Sheet
(Paper Filter Test)
Date: 9/1/98

Run	Purge Flow		Booster Flow		Charcoal Height	File Name	Comm
	Flow SP	Duration	Flow SP	Duration			
1	0	NA	10	NA	0	VDR91981.txt	Big _P between F at the collector se
2	15	5	0	NA	0	VDR91981.txt	no

Vacuum Test Data Sheet

Date: 9/2/98

Run	Purge Flow		Booster Flow		Charcoal Height	File Name	Commen
	Flow SP	Duration	Flow SP	Duration			
1	NA	NA	NA	NA	NA	VDR92982.txt	Leak c
2	15	5	NA	NA	14½	VDR92983.txt	7¼" initial charcoal h test
3	15	5	NA	NA	18¼	VDR92983.txt	
4	15	5	NA	NA	23	VDR92983.txt	
5	15	5	NA	NA	28	VDR92983.txt	
6	15	5	NA	NA	33¼	VDR92983.txt	
7	15	5	NA	NA	35	VDR92983.txt	
8	15	15	20	NA	36½	VDR92983.txt	ACE
9	NA	NA	NA	NA	NA	VDR92983.txt	Leak c
10	NA	NA	20	NA	NA	VDR92984.txt	Pressure drop test acr PT7-12.6 PSIA; pt5-1
11	15	10	20	NA	19½		Booster ramped from purge flow 3.5" befor
12	15	10	20	NA	33¼		
13	15	10	20	NA	36	VDR92985.txt	

Vacuum Test Data Sheet

Date: 9/3/98

Run	Purge Flow		Booster Flow		Charcoal Height	File Name	Commer
	Flow SP	Duration	Flow SP	Duration			
1	20	5	25	NA	~	VDR93981.txt	Pressure set at 45 PSI seconds to simulate a
2	20	5	25	NA	12	VDR93981.txt	Recovered from shut appear slower with lo
3	20	5	got to 15 25	NA	19¾		
4	20	5	got to 15 25	NA	27		
5	20	5	got to 15 25	NA	37½		Set regulator
6	NA	NA		NA			Pressure drop measu

Run 3-5: Bottles getting low.

Vacuum Test Data Sheet

Date: 9/14/98

Run	Purge Flow		Booster Flow		Charcoal Height	File Name	Comment
	Flow SP	Duration	Flow SP	Duration			
1	15	5	20				Inserted clumps that sho not work - leak in collect
2	15	5	20				Apparent blockage in th
3	15	5	20			VDR914982.txt	Cleared with bit 9" ACE blocked The clumps inse were oblong . The long d through the short diame clumps put in the ACB. after starting.

Vacuum Test Data Sheet
(No prefilter installed)
Date: 9/15/98

Run	Purge Flow		Booster Flow		Charcoal Height	File Name	Comm
	Flow SP	Duration	Flow SP	Duration			
1	15	5s	20		14" -4.5 (9.5)	VDR915983.txt	60 PSIG on regul tap was cleared w has 10" of limest 6" charcoal on b black (charcoal) f The 4" on botton previous run. Th much more limes
2	15	5	20		21_” -4.5	VDR915983.txt	
3	15	5	20		28¾ -4.5	VDR915983.txt	
4	15	5	20		33 -4.5	VDR915983.txt	
5	15	10	20		34 -4.5	VDR915983.txt	
6					34¼ -4.5	VDR915983.txt	

Filled section of ACB (pipe with equivalent diameter) with 6" of charcoal and poured that into ACB. Then fille limestone and poured that into ACB.

Vacuum Test Data Sheet

Date: 9/15/98

Run	Purge Flow		Booster Flow		Charcoal Height	File Name	Comm
	Flow SP	Duration	Flow SP	Duration			
1	15	5	20		11"	VDR91584.txt	No prefilter insta
2	15	10/5	20		18¾”		Set for 10s run a
3	0/15	0/10	20		31"		Start booster gas OK. Then starte
4	15	10	20		31.5"		Did not get back into ACB.

Vacuum Test Data Sheet

Date: 9/15/98

Run	Purge Flow		Booster Flow		Charcoal Height	File Name	Comm
	Flow SP	Duration	Flow SP	Duration			
1	15	20s	20		36"	VDR916981.txt	One run to fill co Richard and Mik charcoal on botto on top in the ACI at once.
9/16/98					35½	VDR916982.txt	Collector was tak compacted to 35½
2	15	5	20		36¾	VDR916983.txt	
3	15	10	20		37¼	VDR916983.txt	
4	15	25	20		35¼	VDR916983.txt	Long run to see i one run. The prev was poured back removed only 35½ charcoal packs.
5	15	10	20		35½	VDR916983.txt	

NOTE: At 14" charcoal was pretty black; at 31" charcoal was white mixed with black; at 36" charcoal was wh blacker then middle.

Vacuum Test Data Sheet

Date: 9/16/98

Run	Purge Flow		Booster Flow		Charcoal Height	File Name	Comments 8
	Flow SP	Duration	Flow SP	Duration			
1	5	10	0	0	0"	VDR916983.txt	Run 1 - Line out of ACB = 1.5 5cfm. Did not remove charcoa Run 4 - This moved charcoal Run 8 - This did not remove a Run 9 - This removed a final 1 Run 10 - Refill ACB. Make a completely empty trap. Run 11 - Collected a small am some dust. Run 12 - It collected 7¼" (not dust. Run 13 - Refill Run 14 - This run has ~ 2psi d by the HEPA filter collecting filter was cleaned by vacuumi drop was only a few tenths of Run 17 and 18 - One run to re Note that we got out over 2" n previous run. That charcoal w ACB. There is some variabilit charcoal removed. There was and booster gas. There was 0.5 gas only.
2	7	10	0	0	2"	VDR916983.txt	
3	7	10	0	0	3½	VDR916983.txt	
4	10	10	0	0	15	VDR916983.txt	
5	6	25	0	0	27¼	VDR916983.txt	
6	5	25	0	0	27¼	VDR916983.txt	
7	5	25	20	(25 + 5) 30	33½	VDR916983.txt	
8	5	15	20		33½	VDR916983.txt	
9	15	15	20		34½	VDR916983.txt	
10	15	30s	20		0-35	VDR916984.txt	
11	15	10	20		35_	VDR916984.txt	
12	15	10	20		35½	VDR916984.txt	
13	15	10	20			VDR916984.txt	
14	15	20	20		34½	VDR916984.txt	
15	15	30	20		34½		
16	15	30	20		35_		
17	15	30	20		37¼		
18	15	30	20		37¼		

Vacuum Test Data Sheet

Date: 9/30/98

Run	Purge Flow		Booster Flow		Charcoal Height	File Name	Comm
	Flow SP	Duration	Flow SP	Duration			
1	15	10	20	NA	13"	VDR93081.txt	Test of additiona 55 gal. drum to a below charcoal.
2	15	30	20	NA	31"	VDR93081.txt	Charcoal was suc during both runs below hole in AC
3	15	30	20	NA	31"	VDR101981.txt	Cleaned out hose ACB - hose full o mixture - hose re during run - char
4	15	30	20	NA	29"	VDR101981.txt	

Vacuum Test Data Sheet

Date: 10/1/98

Run	Purge Flow		Booster Flow		Charcoal Height	File Name	Comments &
	Flow SP	Duration	Flow SP	Duration			
1	15	30	20	NA	28"	VDR101981.txt	Clump test - one ½" clump pla
2	15	30	20	NA	32"	VDR101981.txt	ACB empty - no blockage clu
3	15	30	20	NA	28"	VDR101981.txt	Clump test, two ½" clumps pl
4	15	30	20	NA	29"	VDR101981.txt	ACB empty - no blockage
5	15	40	20	NA	33¾"	VDR101981.txt	Clump test, four ½" clumps pl blockage
6	15	40	20	NA	17	VDR101981.txt	Clump test, eight ½" clumps p
7	15	30	20	NA	19	VDR101981.txt	Tried to recover from plug by came through but then replug
8	15	30	20	NA	19	VDR101981.txt	Turned on booster first, remai
9	15	30	20	NA	19	VDR101981.txt	Tried normal start up, remain
10	15	30	20	NA	19	VDR101981.txt	Started purge with no vacuum remained plugged. Inspected a of cold tap.