# A Nuclear-Fossil Combined-Cycle Power Plant for Base-Load and Peak Electricity

**Charles W. Forsberg and James C. Conklin**

**Oak Ridge National Laboratory***
**P.O. Box 2008; Oak Ridge, TN 37831-6165**
**Tel: (865) 574-6783; e-mail: forsbergcw@ornl.gov**

**American Nuclear Society 2007 Annual Meeting**
**Boston, Massachusetts**
**June 24–28, 2007**

*Managed by UT-Battelle, LLC, for the U.S. Department of Energy under contract DE-AC05-00OR22725. The submitted manuscript has been authored by a contractor of the U.S. Government under contract DE-AC05-00OR22725. Accordingly, the U.S. Government retains a nonexclusive, royalty-free license to publish or reproduce the published form of this contribution, or allow others to do so, for U.S. Government purposes. File name: ANS07 Combined Cycle

# The Challenge of Electricity Production:

## Matching Production with Demand

# Electricity Demand Varies with Time of Day, Weekly, and Seasonally

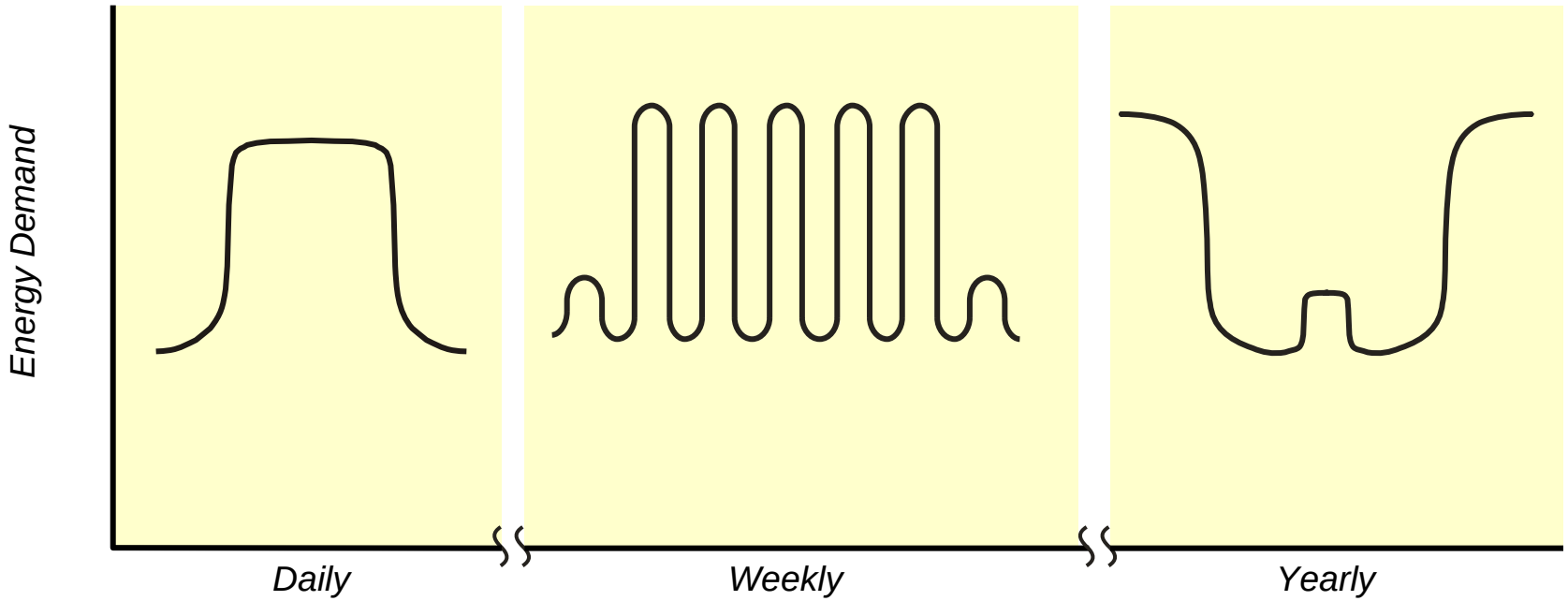

# The Price (and Cost) of Electricity at Times of Peak Demand is High

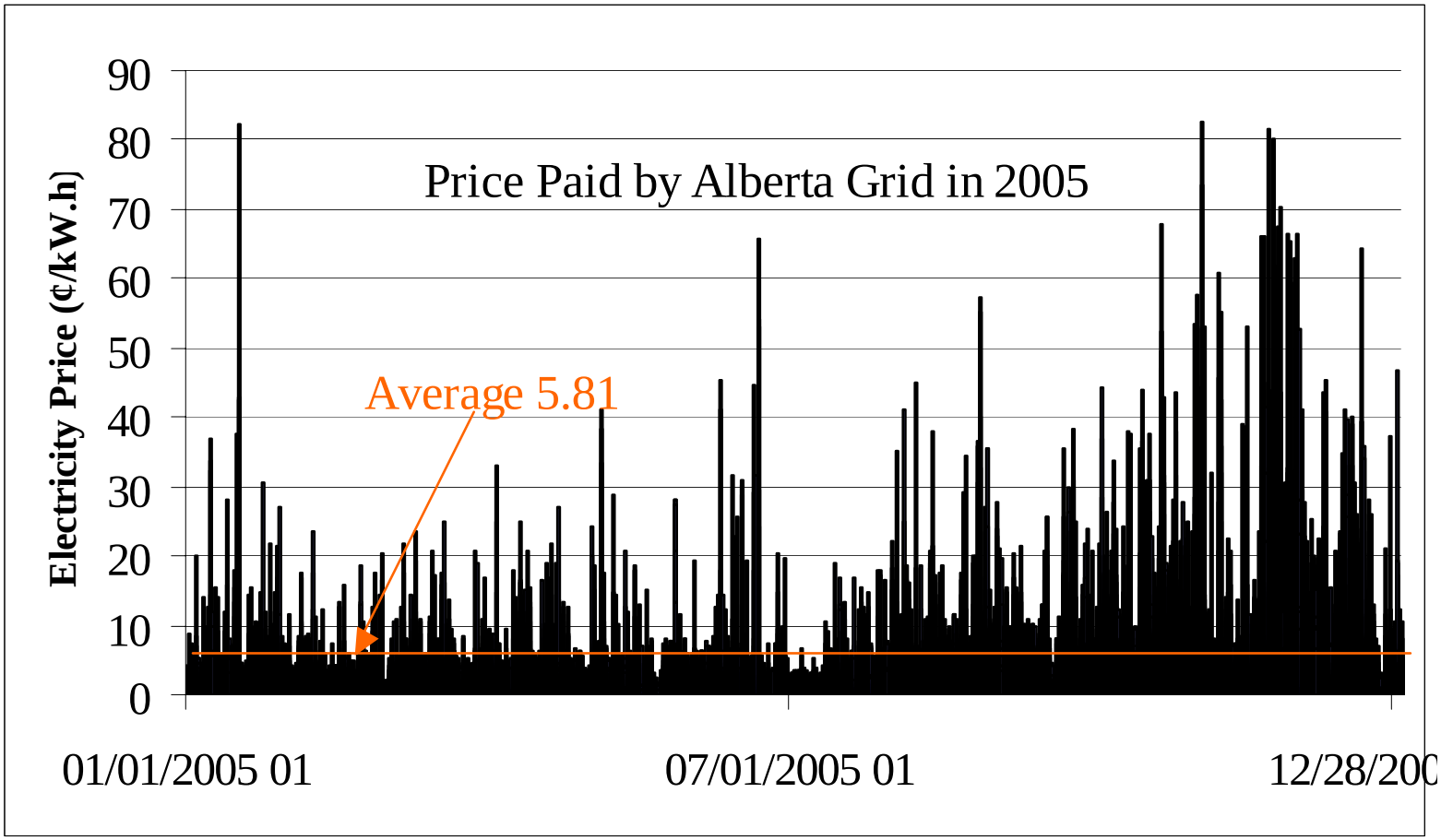

# Different Electricity Sources have Different Characteristics

| Energy Source | Capital Cost | Operating Cost |
|---|---|---|
| Nuclear and Renewables | High | Low |
| Fossil | Low | High |

**"Base-Load" Operations are Required for Low-Cost Nuclear and Renewable Electricity**

# Fossil Fuels are Used to Match Electricity Demand with Production

- **Fossil fuels are <u>inexpensive to store</u> (coal piles, oil tanks, etc.)**
- **Systems to convert fossil fuels to electricity have relatively <u>low capital costs</u>**

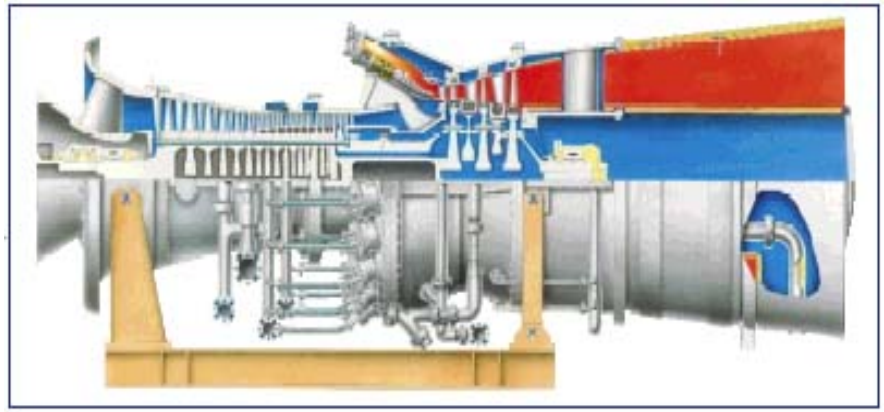

- **Carbon dioxide sequestration is likely to be very expensive for peak-load fossil-fueled plants**
- **If fossil fuel consumption is limited by greenhouse or other constraints, what are the alternatives for peak power production?**

# Changing Load Characteristics are Creating a Power Quality Challenge

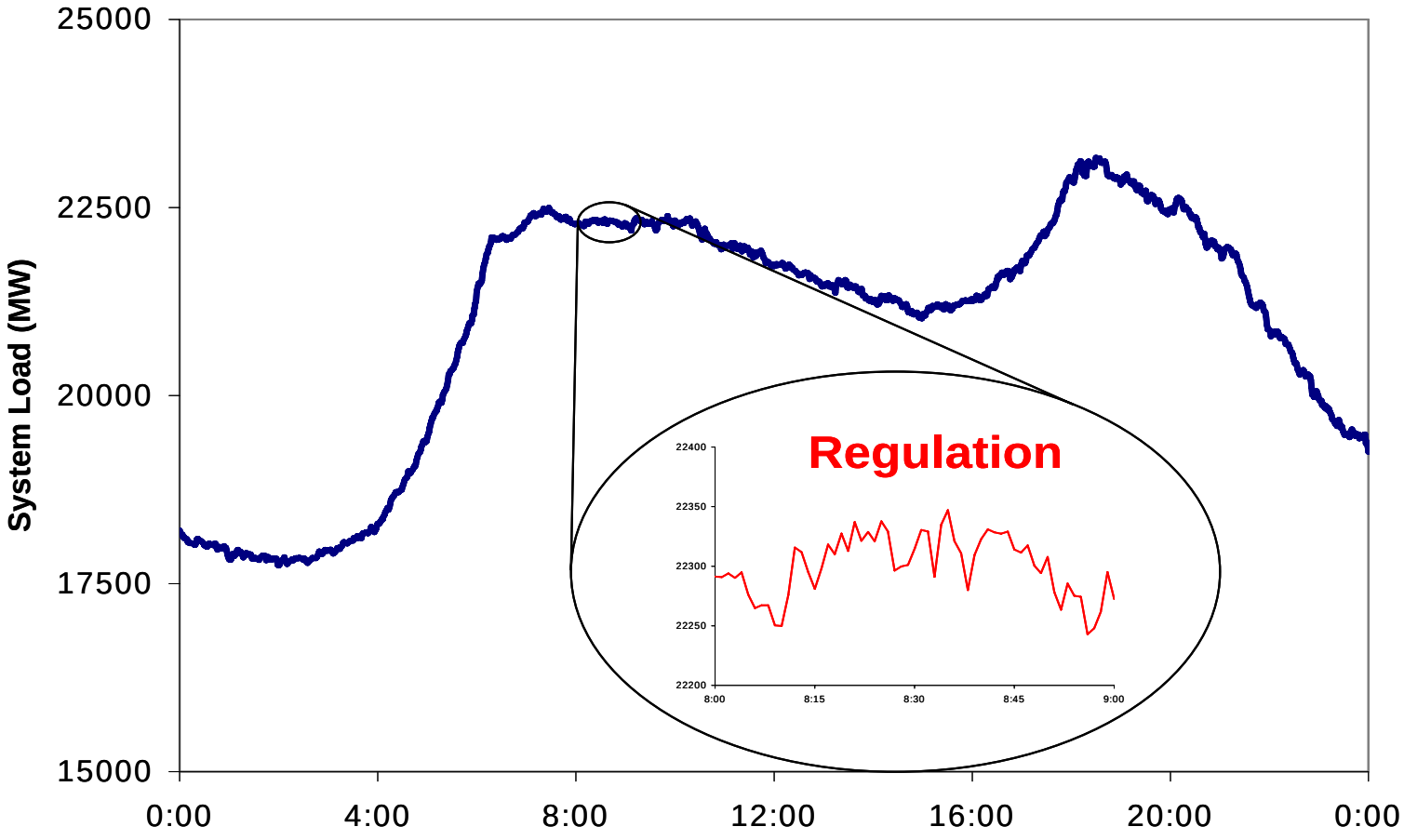


ERCOT (Texas)

# The Special Problems with Small Electric Grids

# Large-Grid Reliability is High Because of Averaging of Generation and Demand

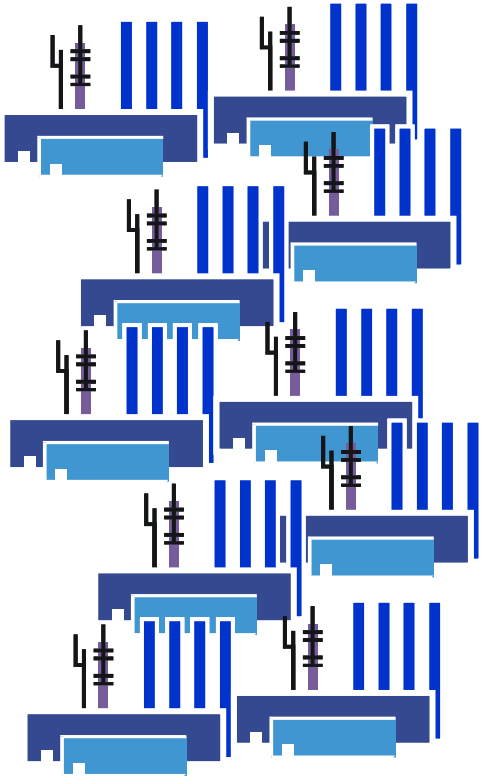

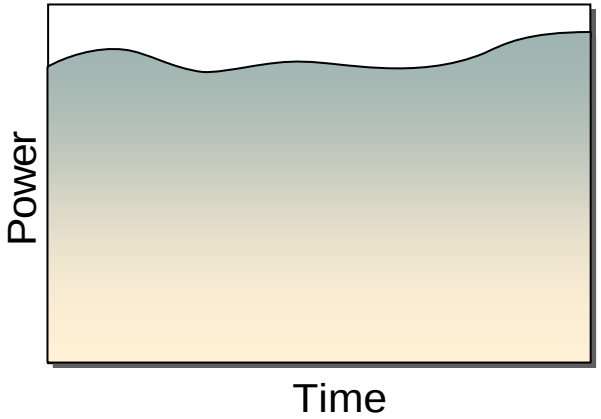

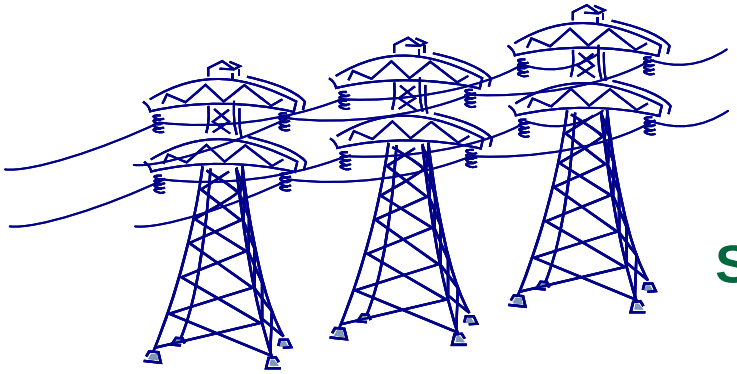

**Many Power Plants**

**No Single Customer Represents a Significant Fraction of the Load**

# Small-Grid Reliability is Lower Because of Less Averaging of Generation and Demand

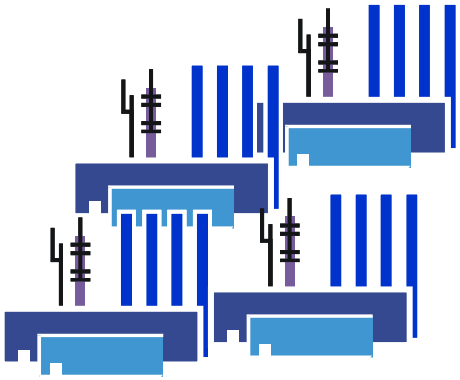

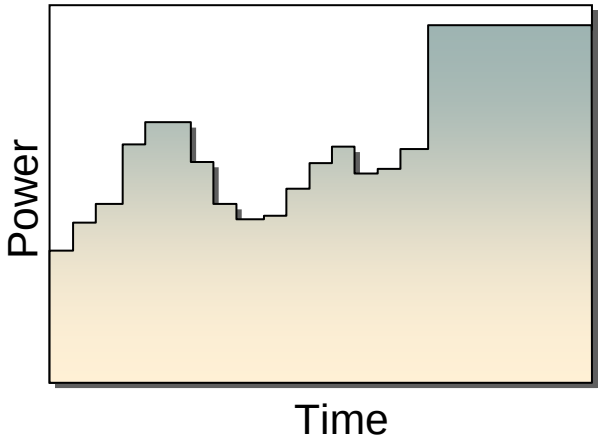

**Large Customers Represent a Significant Fraction of the Load**

**Limited Number of Power Plants**

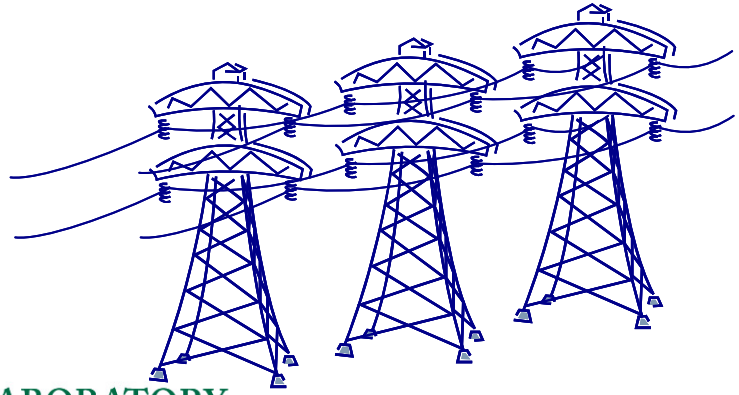

# The Nuclear-Fossil Combined-Cycle Plant

# Nuclear-Fossil Combined-Cycle Power Plant

**(Base-Load Nuclear; Nuclear and Fossil for Peak Electricity Production)**

***Gas Turbine Cycle***

***Steam Turbine Cycle***

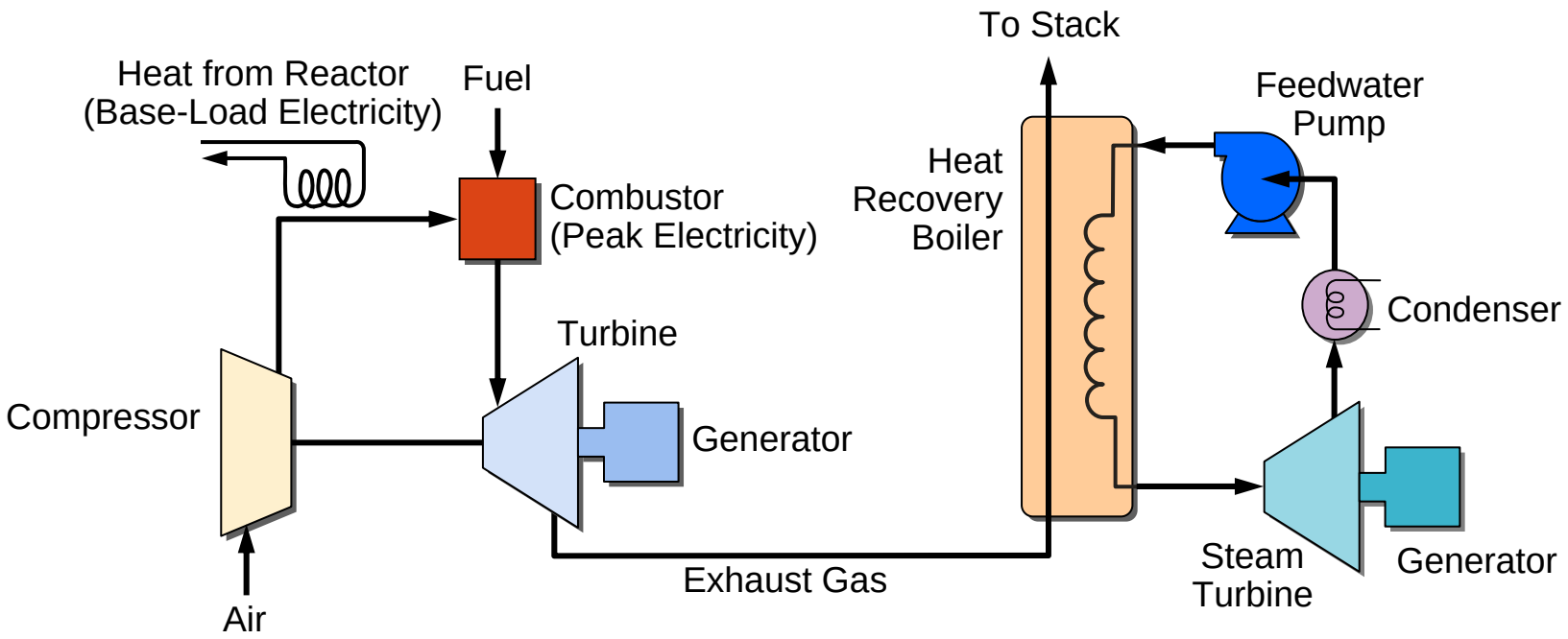

# Combined Cycle: Base-Load Electricity

- **Compress air**
- **Heat air**
  - **Nuclear heat (helium or liquid-salt intermediate loop from reactor to power cycle)**
  - **700 to 800°C**
- **No fossil fuel in combustor**
  - **Temperature 700 to 800°C**
- **Hot air through Brayton turbine that generates electricity**
- **Exhaust gas to heat recovery boiler**
- **Steam from boiler for electricity production**

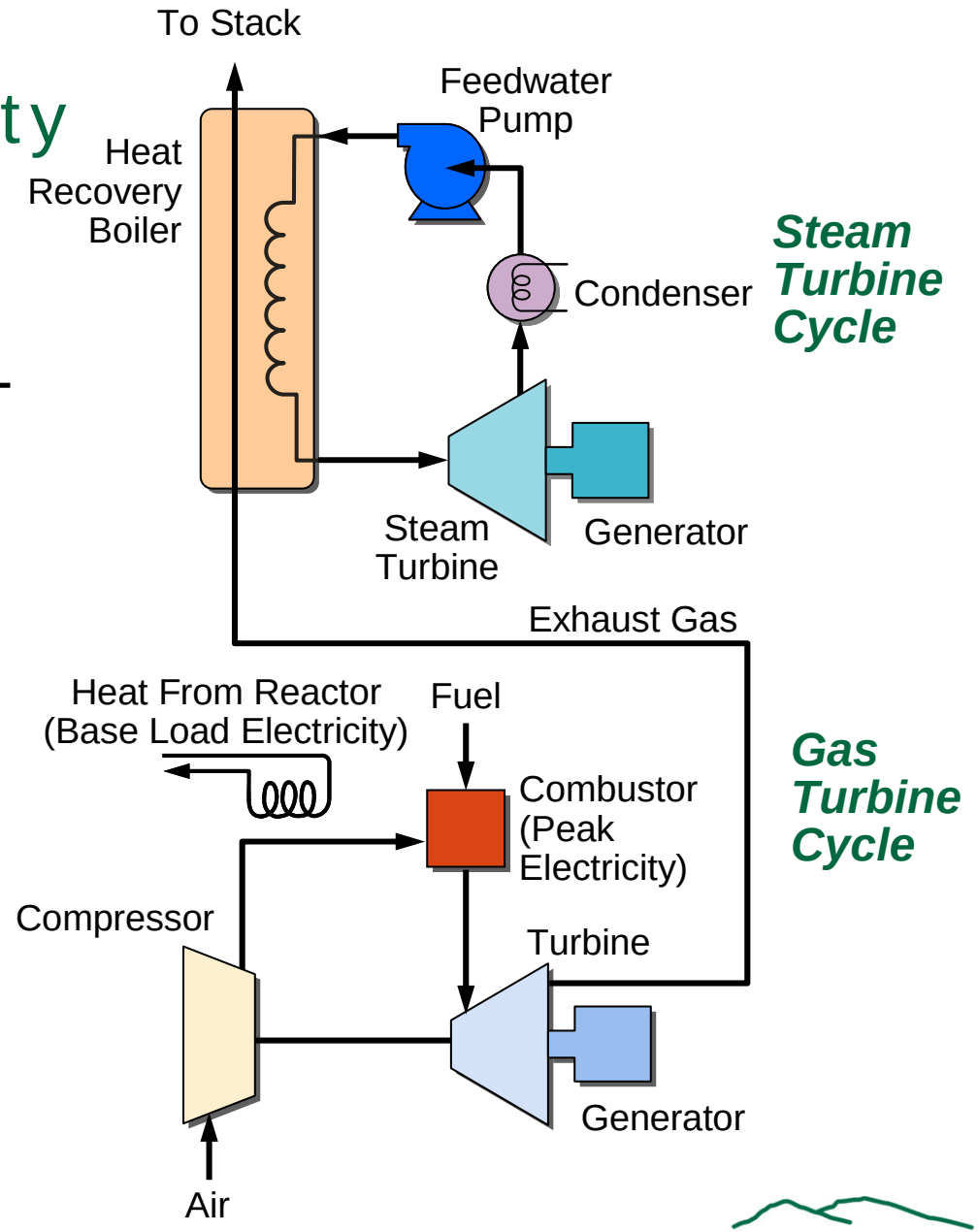

# Combined Cycle: Peak Electricity

- **Compress air**
- **Heat air**
  - **Nuclear heat (helium or liquid-salt intermediate loop from reactor to power cycle)**
  - **700 to 800°C**
- **Fossil fuel to combustor**
  - **Temperature to 1300°C**
- **Hot air through Brayton turbine that generates electricity**
- **Exhaust gas to heat recovery boiler**
- **Steam from boiler for electricity production**

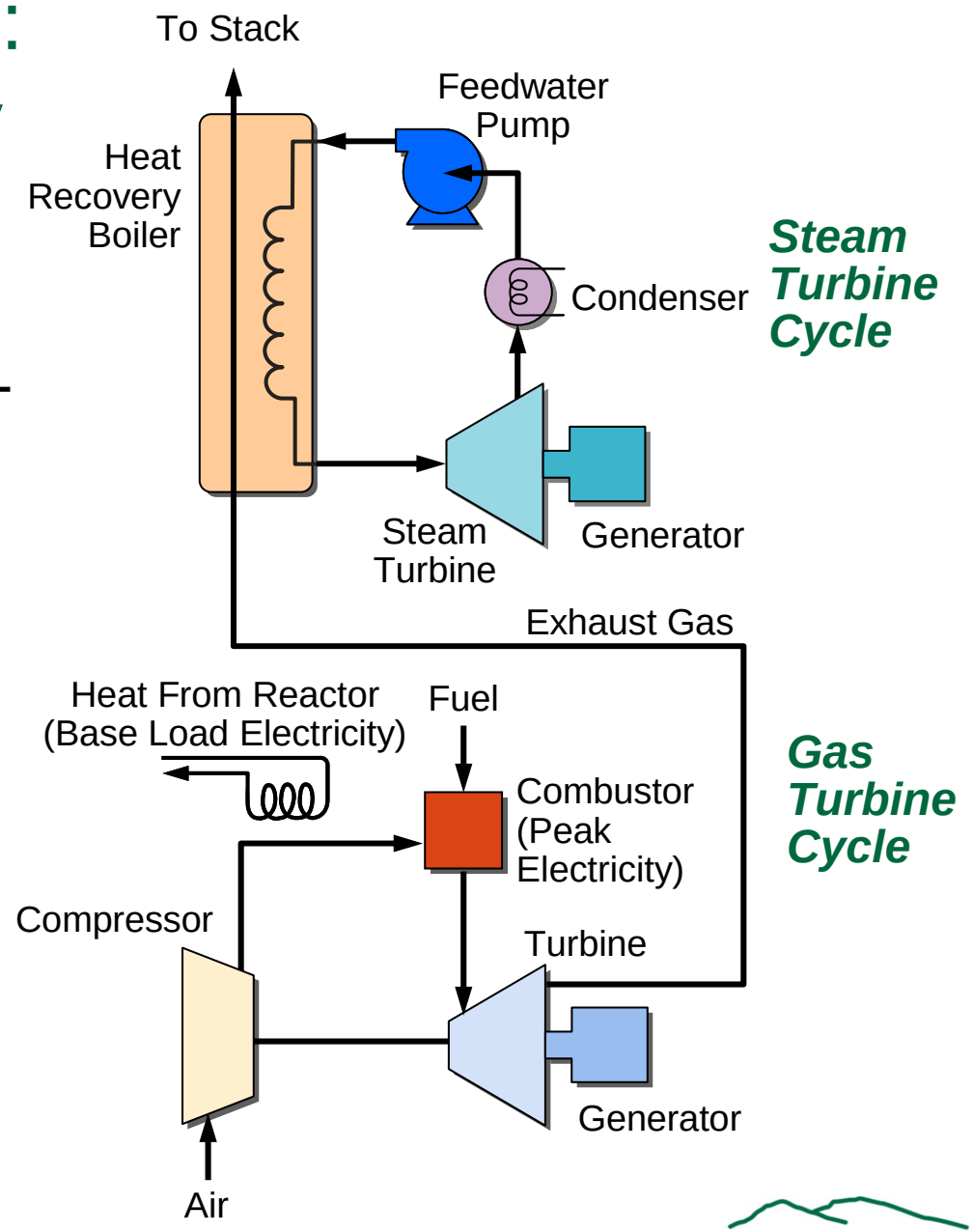

# Nuclear-Fossil Combined Cycle

- **Base load electricity with nuclear heat only**
- **Peak load with nuclear and fossil heat**
  - **Reduce use of expensive natural gas**
    - **Lower-cost nuclear heat to raise air temperature to >700°C**
    - **Natural gas only for high-temperature heat**
  - **Minimize release of $CO_2$**
- **Match demand and electrical generation**

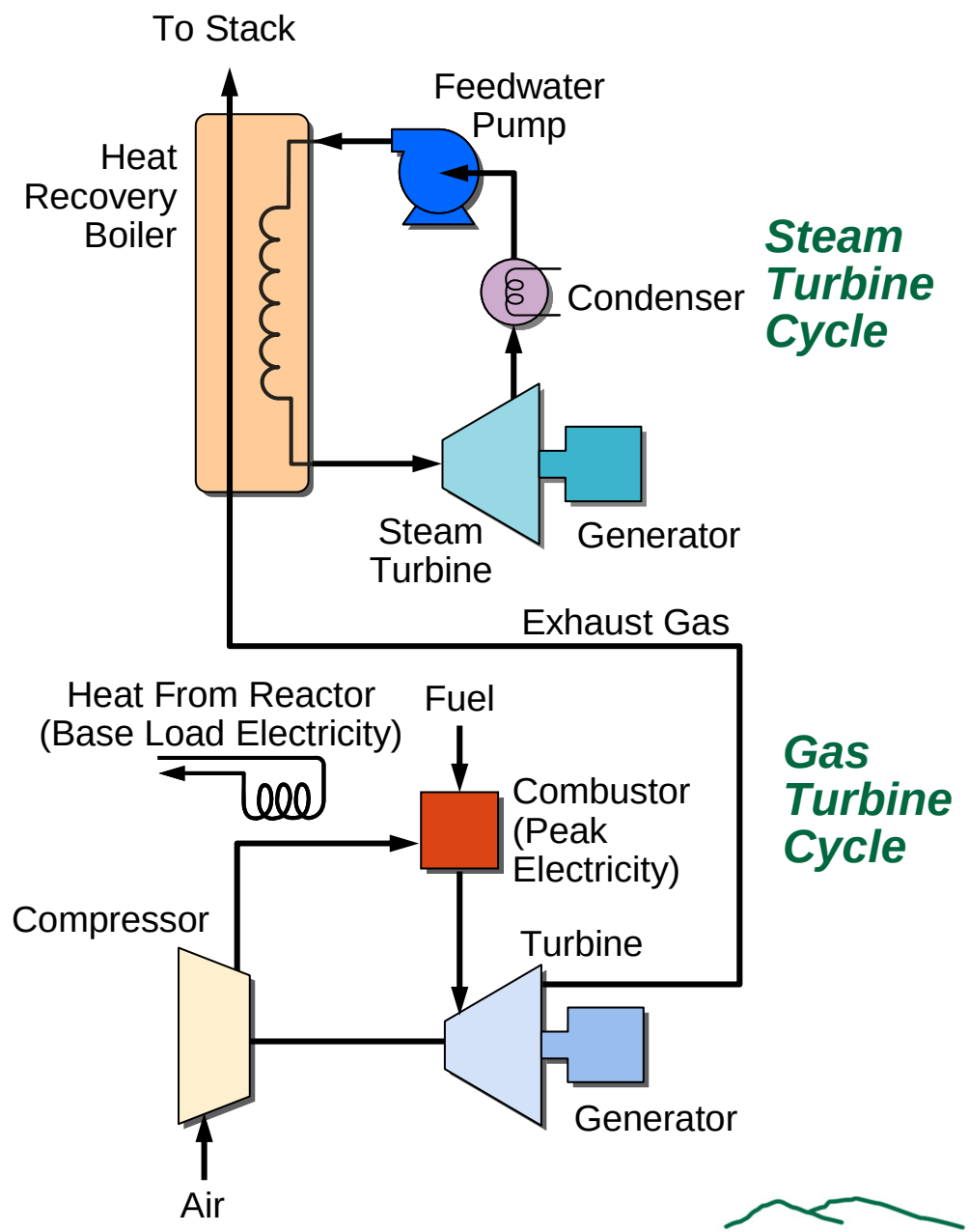

# Nuclear-Hydrogen Combined Cycle

- **Base-load electricity with nuclear heat**
- **Peak-load electricity with nuclear and hydrogen heat**
  - **Longer term option**
  - **Can meet peak electricity demands in a carbon-dioxide-constrained world**
  - **Nuclear heat to minimize use of expensive hydrogen**

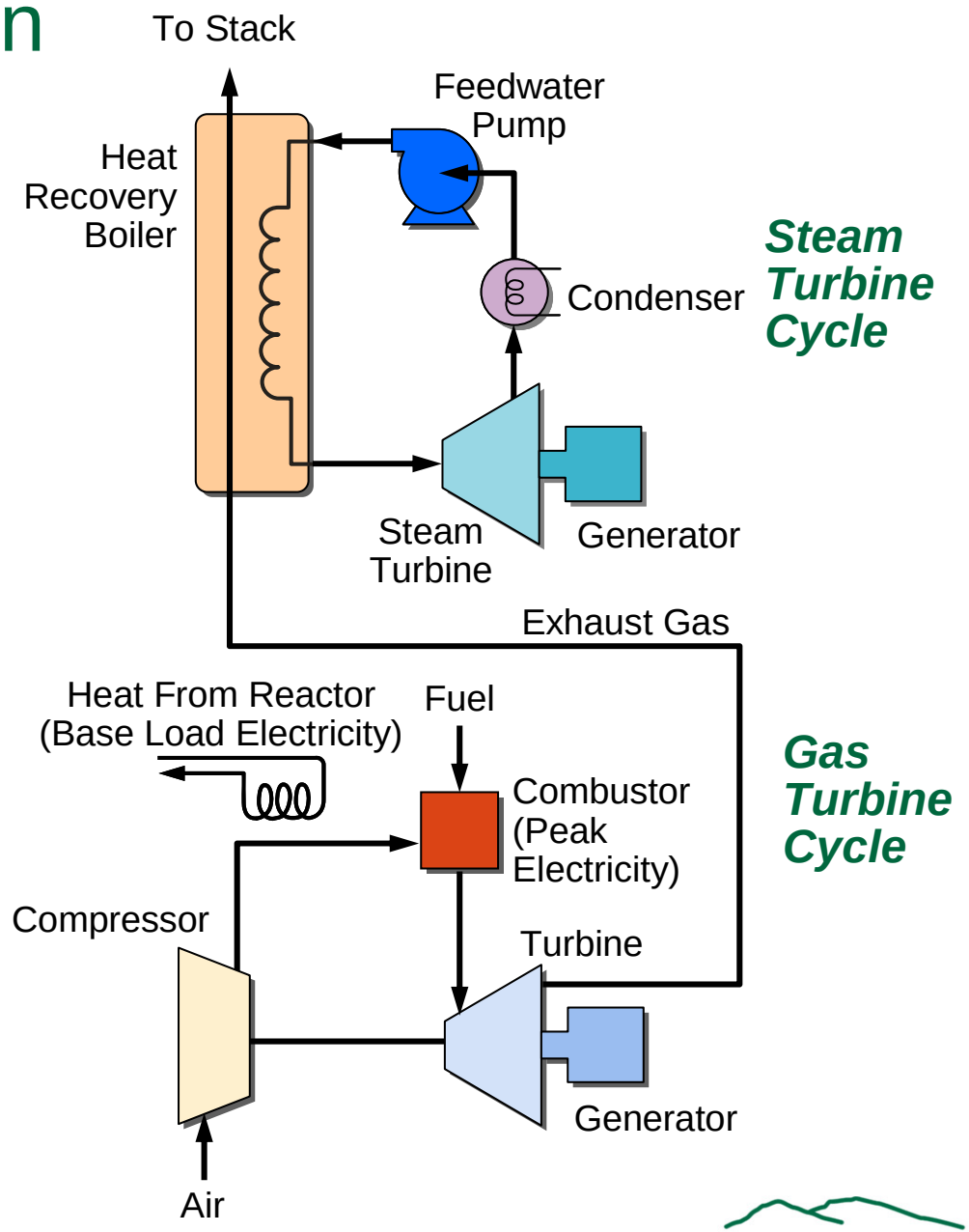

# A Nuclear-Fossil Combined Cycle can Match Variable Electric Power Demands

- **Variable power output, from base load to maximum peak load**
- **High-temperature nuclear heat raises air temperature above the fuel auto-ignition temperature**
  - **No need to match air-to-fuel ratio**
  - **No power generation constraint on output**

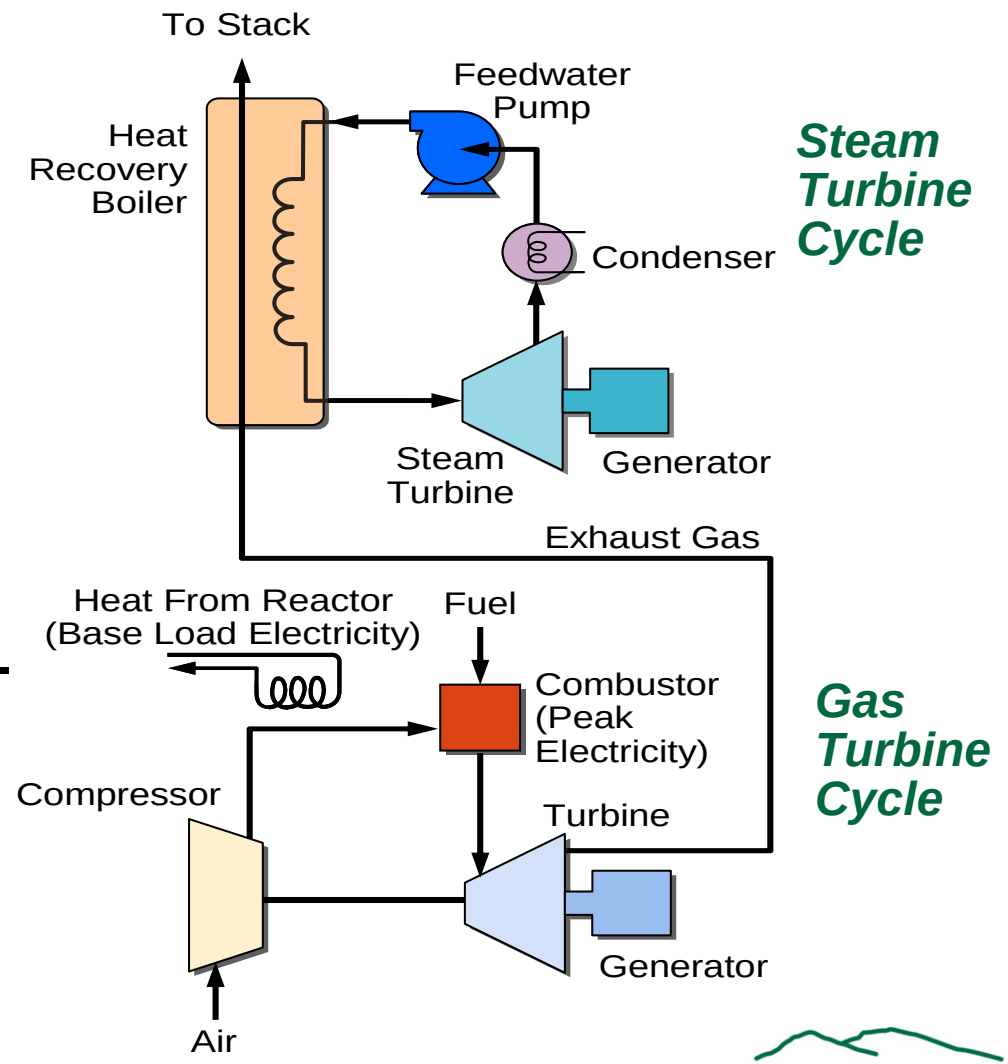

# Examples of Real Electric Utility Markets

Highly Variable Demand

No Flat Electric Loads

# Seattle: Marginal Price of Electricity vs Hours per Year

## (Low-Cost Renewable Hydro in the Spring)

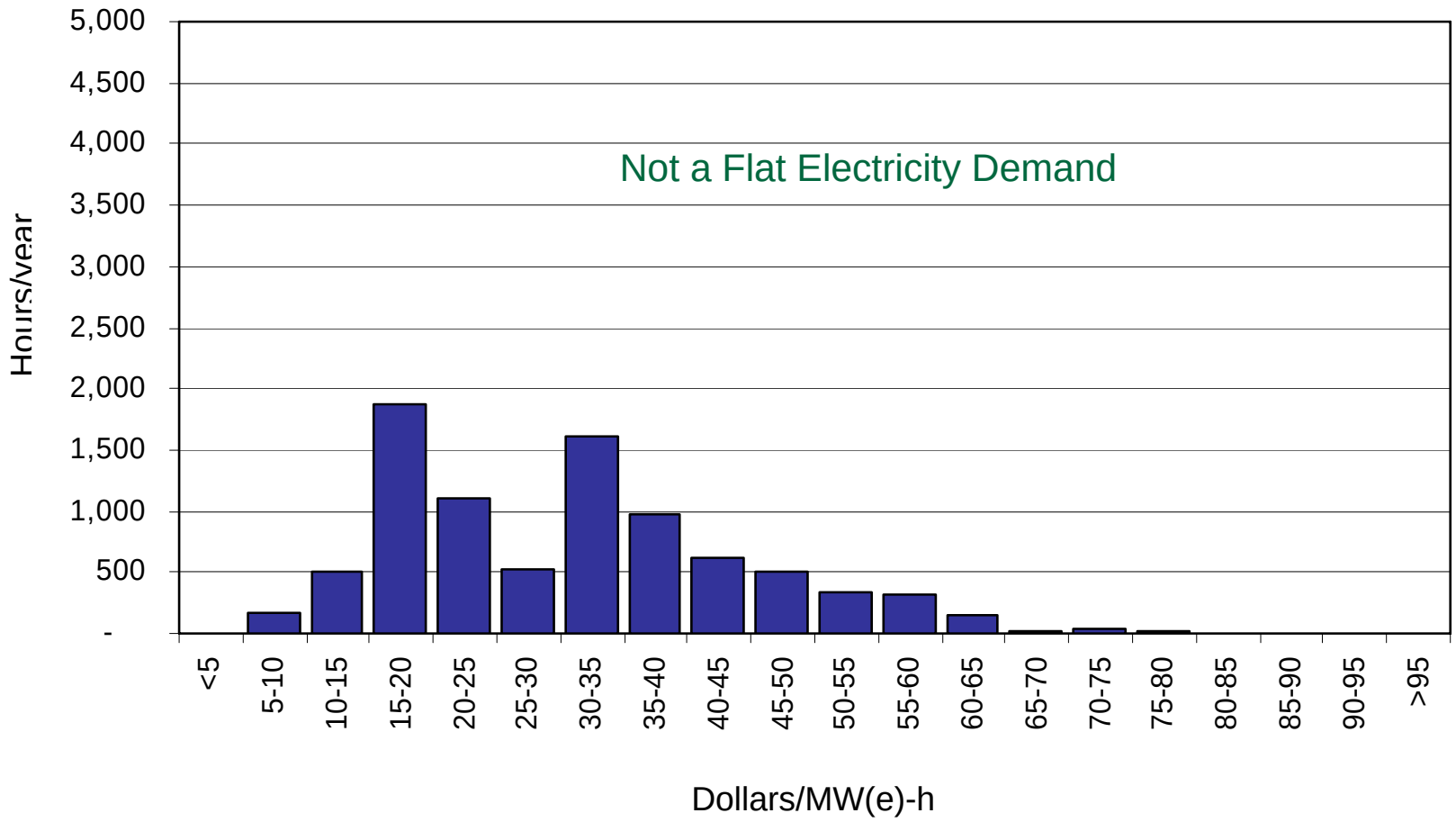

# Southern: Marginal Price of Electricity vs Hours/Year

## (Balanced Home/Commercial/Industrial Load)

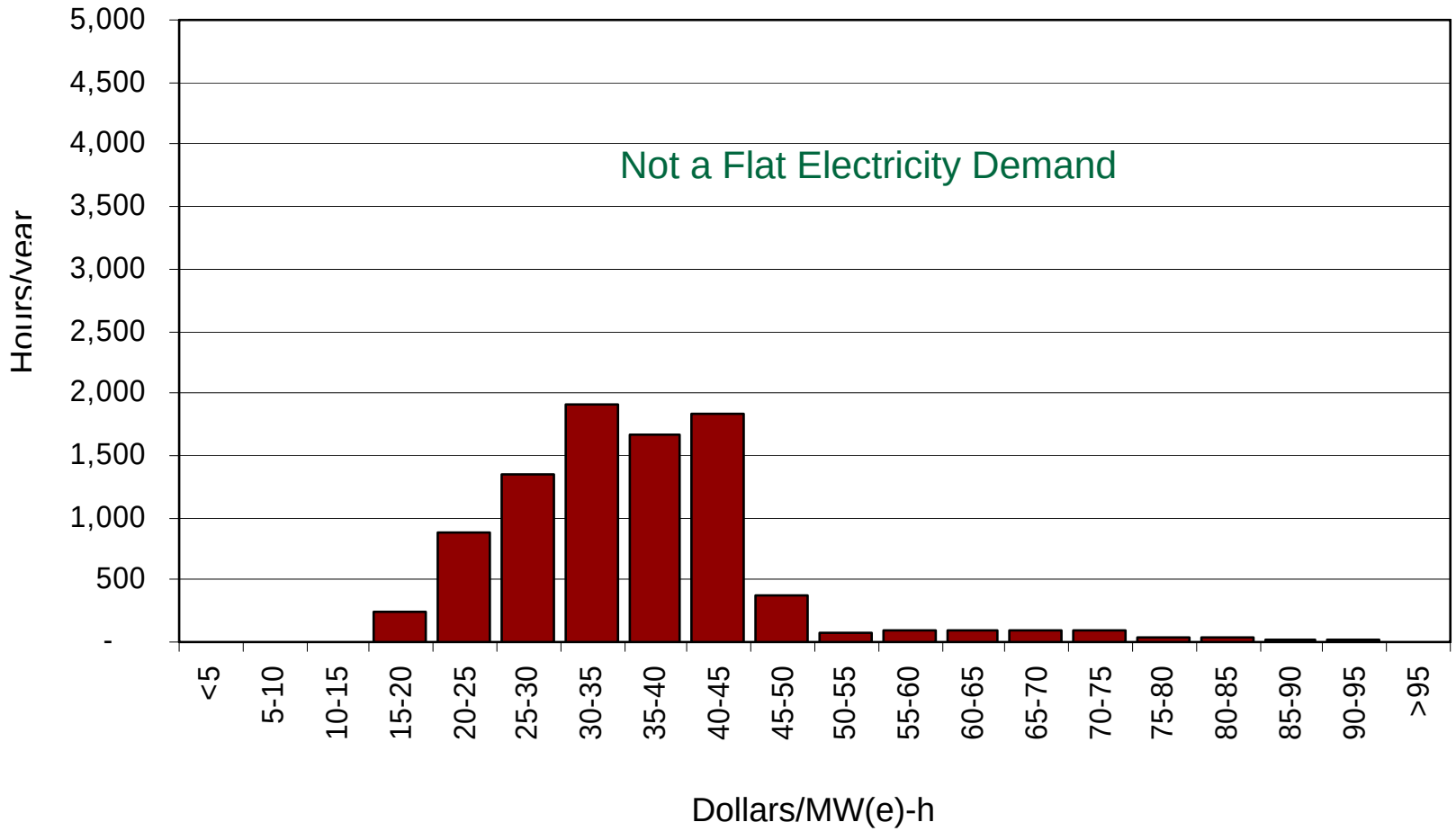

# Arizona Public Service: Marginal Price of Electricity vs Hours/Year

## (Base-Load Nuclear/Fossil and a Hot Summer)

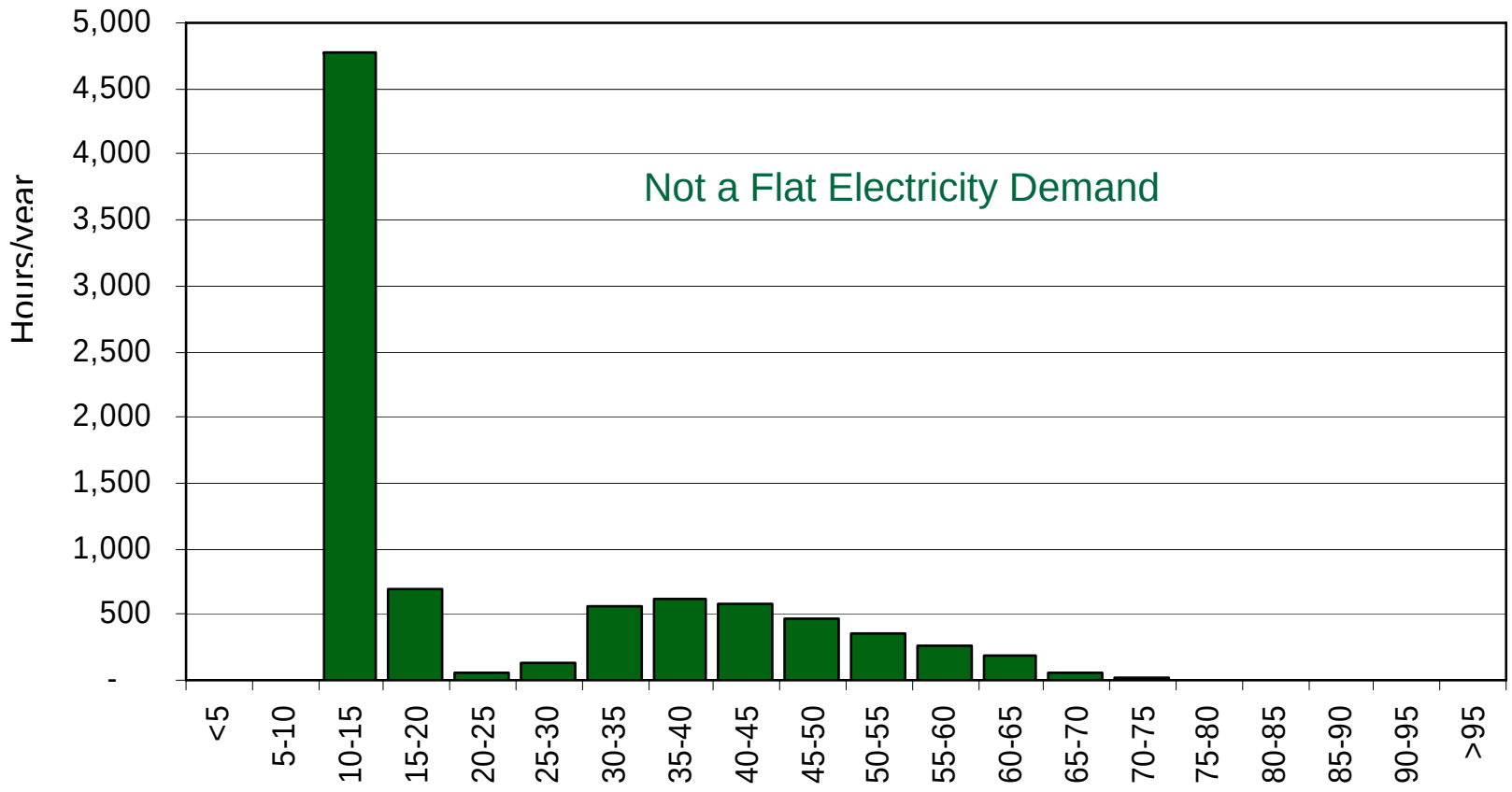

# Los Angeles Department of Water and Power: Marginal Electric Price vs Hours/Year

(Massive Daily Swing: Low Demand for 5 Hours per Day)

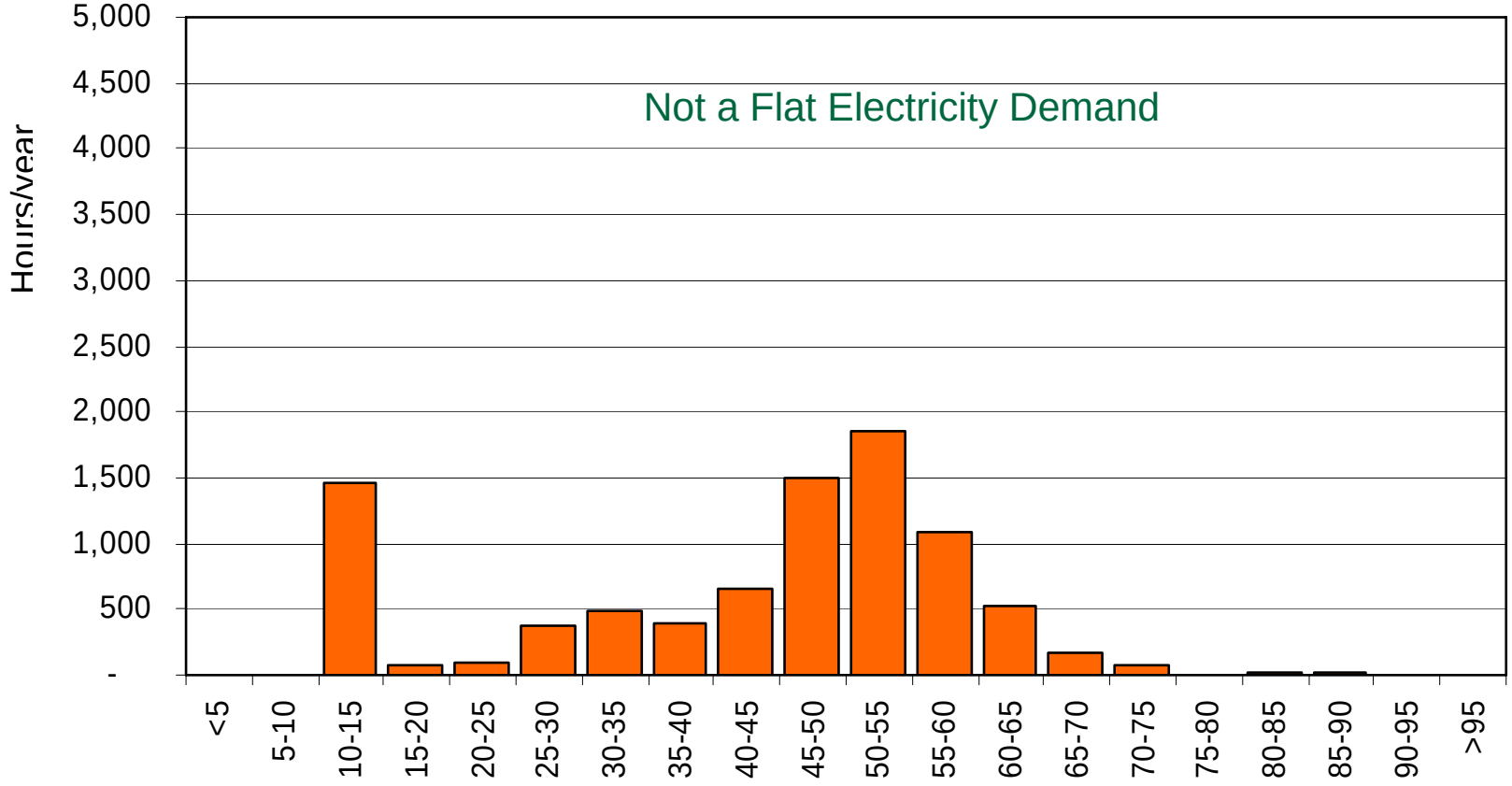


FY 2004 FERC Marginal Price

# Nuclear-Fossil Combined Cycle can have Short Response Times (Milliseconds?)

- **Normal power systems are slow to speed up**
- **Very rapid response for spinning reserve and frequency control**
  - **Nuclear heats air above the fuel auto-ignition temperature: any fuel-air ratio works**
  - **No compressor inertia to slow the response to changing electric demand**
- **Addresses the small-grid challenge**

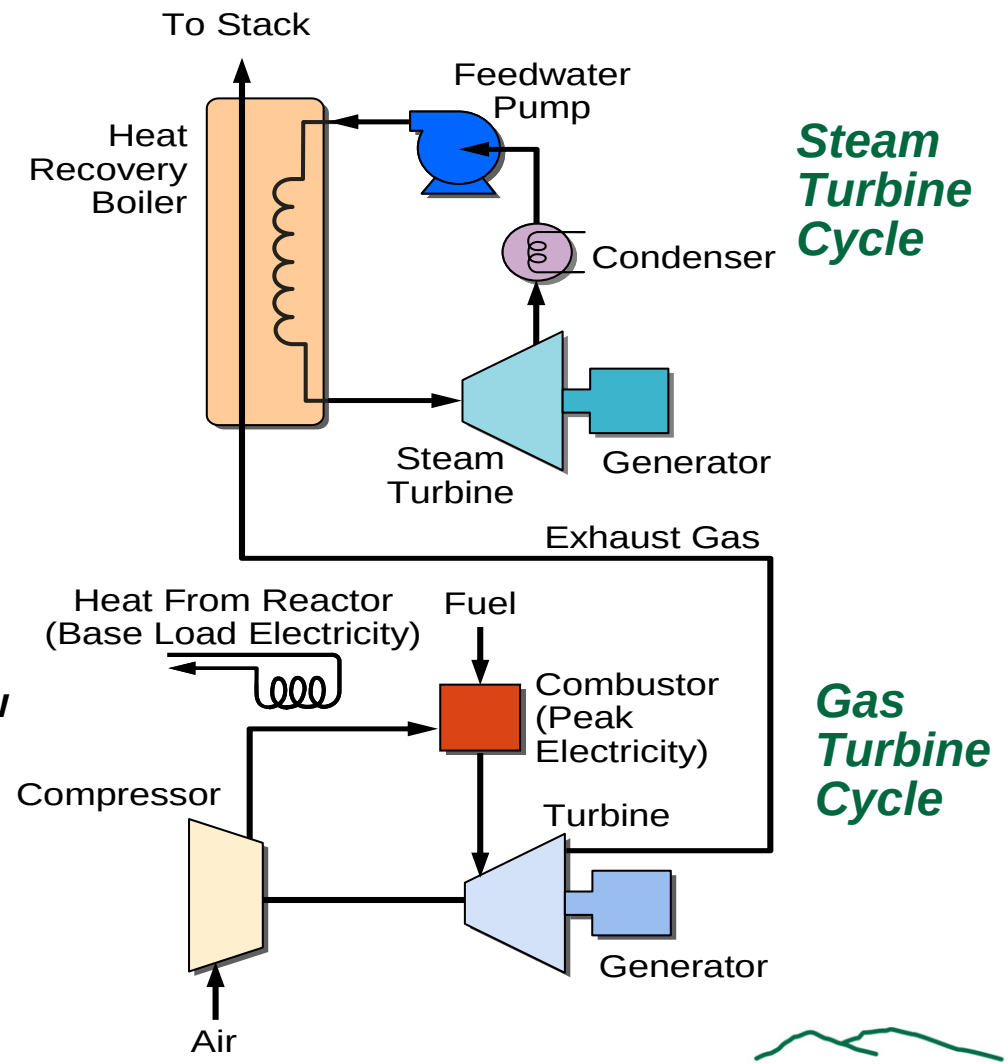

# The Combined Cycle Coupled to the Advanced High-Temperature Reactor

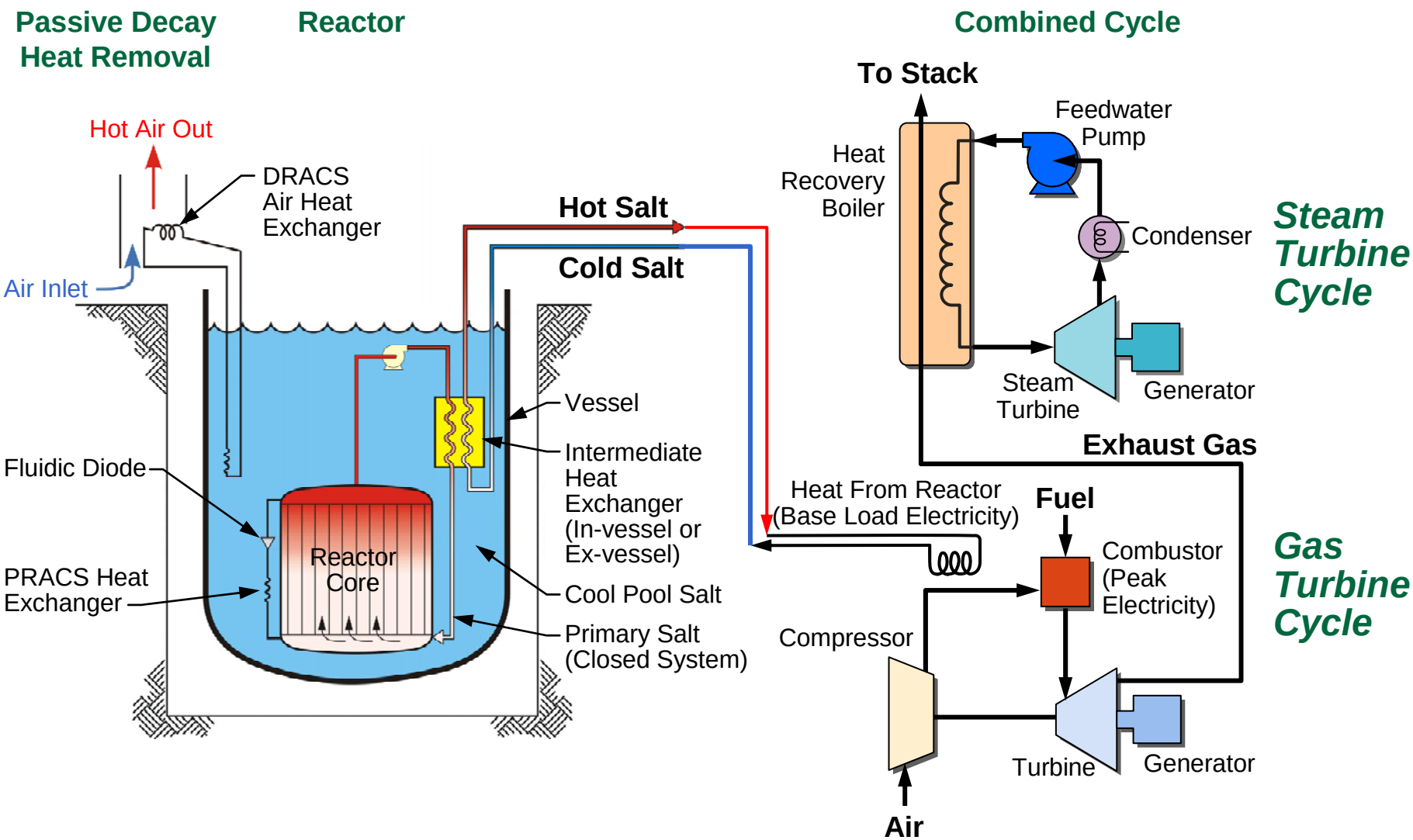

# Example: Nuclear-Fossil Combined Cycle

- **Simple cycle option**
- **Brayton turbine: similar to GE Model MS7001FA**
- **Nuclear heat**
  - **175 MW(t)**
  - **800°C**
  - **68.5 MW(e)**
- **Fossil (max output)**
  - **323 MW(t)**
  - **1300°C**
  - **208 MW(e)**

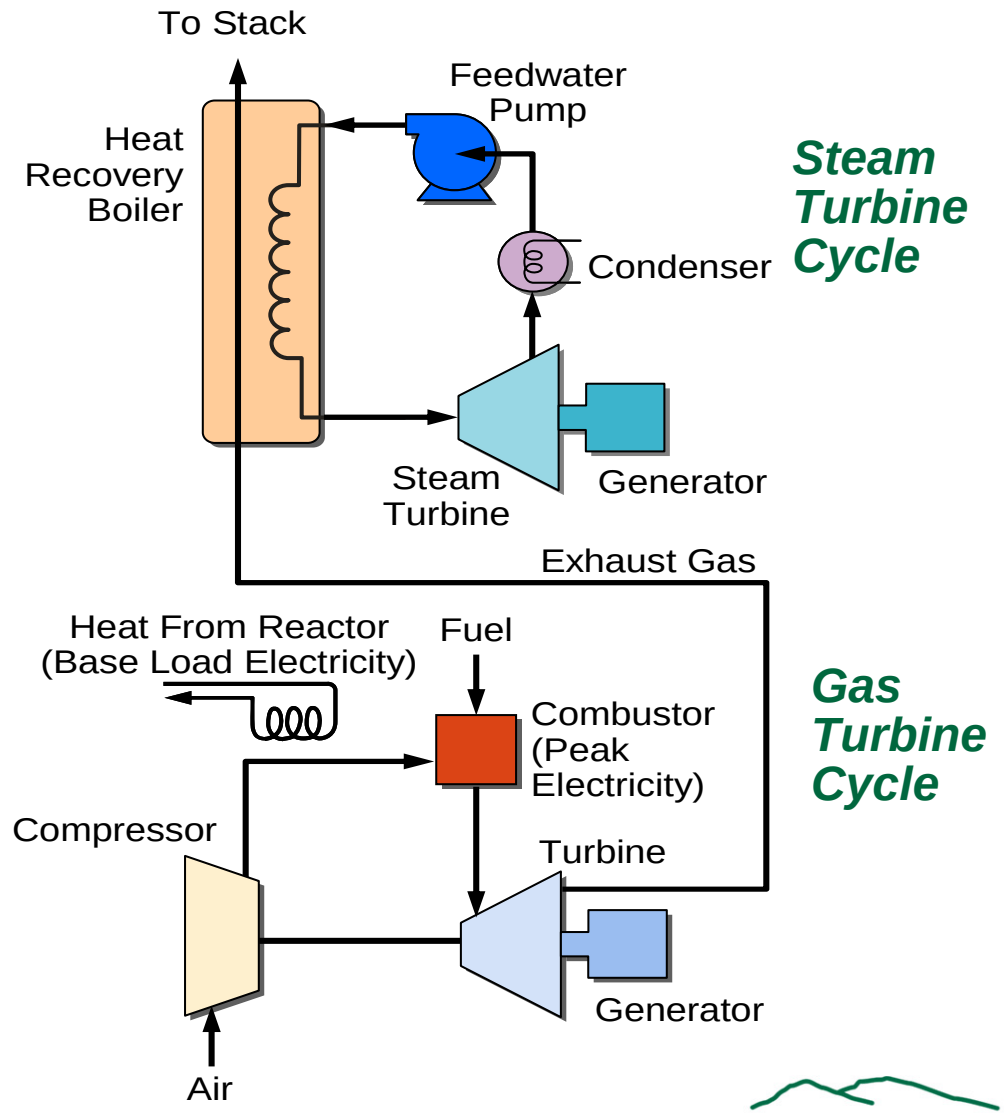

# Previous Experience Exists with Nuclear-Heated Air Brayton Cycles

- **Aircraft Nuclear Propulsion Program**
  - **Jet bomber**
  - **Unlimited range**
- **Accomplishments**
  - **2.5 MW(t) and 882°C achieved in Aircraft Reactor Test**
  - **Jet engine development including heat exchanger**
  - **Full design of reactor**
  - **Cancelled because of accident risk and reactor shielding weight**
- **Previous experience base that demonstrates technical feasibility**

ORNL Aircraft Reactor Experiment

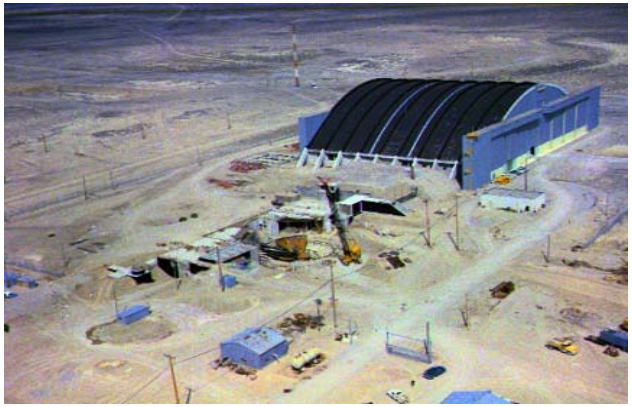

INL Shielded Aircraft Hanger

# Previous Experience Exists with Nuclear-Fossil Power Systems

- **Nuclear steam production with oil-fired super heaters**
- **Benefits**
  - **Higher efficiency**
  - **Avoid wet steam in turbine**
- **Previous experience**
  - **Indian Point I**
  - **Garigliano, Italy**
  - **Lingen, Germany**

# Research and Development Needs

- **Analysis of alternative power cycles (limited studies to date)**
  - **Many variants exist**
    - **Steam injection after compressor**
    - **Nuclear feedwater heating (rather than from hot Brayton-cycle exhaust)**
  - **Cycle choices have major impacts**
    - **Base-load efficiency**
    - **Fraction of nuclear versus fossil heat input**
- **Development of the heat exchanger and intermediate loop between the reactor and the combined-cycle plant**
- **Assessment, optimization, and development of rapid-response Brayton cycle**
  - **All existing air Brayton-cycle machine designs have constraints**
    - **Need to control air-to-fuel ratio for flame stability**
    - **Slow compressor acceleration under increased load**
  - **With the historic Brayton-cycle constraints removed, what really limits variable-power performance?**
- **System optimization, economic assessments, and market assessments**

# Conclusions

- **The mismatch between electricity generation and demand is a a major grid operating challenge today**
  - **Fossil fuels are used for variable loads but there may be restrictions on fossil fuel use**
  - **Problems in matching generation and load in small electrical grids**
  - **Need for fast-response spinning reserve and frequency control**
- **Nuclear-fossil combined-cycle option addresses the challenge**
- **This option requires a high-temperature reactor so that the air after nuclear heating is above the auto-ignition temperature**
  - **Eliminates constraints of matching fuel-to-air ratio in fossil Brayton cycles**
- **Nuclear-fossil combined cycle is in an early stage of development**
  - **Need to understand design options and trade-offs that strongly impact base-load efficiency (preheat boiler water with nuclear heat, steam injection, etc.)**
  - **Significant technical challenges remain**

# Biography: Charles Forsberg

Dr. Charles Forsberg is a Corporate Fellow at Oak Ridge National Laboratory, a Fellow of the American Nuclear Society, and recipient of the 2005 Robert E. Wilson Award from the American Institute of Chemical Engineers for outstanding chemical engineering contributions to nuclear energy, including his work in hydrogen production and nuclear-renewable energy futures. He received the American Nuclear Society special award for innovative nuclear reactor design and the Oak Ridge National Laboratory Engineer of the Year Award.

Dr. Forsberg earned his bachelor's degree in chemical engineering from the University of Minnesota and his doctorate in Nuclear Engineering from MIT. After working for Bechtel Corporation, he joined the staff of Oak Ridge National Laboratory, where he is presently the Senior Reactor Technical Advisor. Dr. Forsberg has been awarded 10 patents and has published over 200 papers in advanced energy systems, waste management, and hydrogen futures.

# A Nuclear-Fossil Combined-Cycle Power Plant for Base-Load and Peak Electricity

The nuclear-fossil combined-cycle power plant couples a high-temperature nuclear reactor (such as the Advanced High-Temperature Reactor) to an open-air Brayton combined-cycle plant with a design similar to that of the combined-cycle plants that burn natural gas to produce electricity. Nuclear heat is used for base-load power production, and nuclear heat with supplemental natural gas or jet fuel is used to meet peak electricity demands. For base-load operation, (1) the air is compressed, (2) the compressed air is heated by a heat exchanger with heat from a high-temperature reactor, (3) the hot gases exit a turbine that produces electricity, (4) a steam heat recovery boiler further cools the gases that go to the stack, and (5) the steam produces more electricity. If peak power is to be produced, natural gas, jet fuel, or hydrogen (long-term option) is added to the hot gas after the nuclear heat exchanger to increase the peak gas temperature and thus increase power levels in the plant.

This combination has several advantages: (1) higher efficiency, (2) unique capabilities for small electrical grids (see below), (3) reduced carbon dioxide emissions via the use of using nuclear heat to preheat air for peak power production, and (4) potentially improved economics achieved by combining low-cost base-load nuclear heat production that allows full utilization of the nuclear heat source with peak power production using low-capital-cost combined-cycle systems. If there are constraints on the use of fossil fuels, there is the longer term option of using hydrogen rather than fossil fuels with the nuclear system designed to minimize the use of expensive hydrogen.

Compared with traditional combined-cycle plants, this plant has two radically different characteristics that together offer the unique possibility of using high-temperature reactors to address the frequency control and spinning reserve challenges associated with small electrical grids. *The requirement to solve these challenges is the ability to vary electrical power output very rapidly to match production with demand.* No existing nuclear reactor or fossil plant has this capability. This may be a unique mission for high-temperature reactors to address a major challenge.

*Infinitely variable power output*. The air temperature after the nuclear heat exchanger is between 700 and 800°C, above the auto-ignition temperature of natural gas or jet fuel. The natural gas burns. Any power level from base-load nuclear to full nuclear-fossil power output can be produced. In conventional gas turbines, a precise ratio of air to fuel is required to maintain flame stability and heat the natural gas or jet fuel to a temperature sufficiently hot that it burns. Power outputs over only a limited range are possible. The nuclear-fossil combined cycle avoids this problem.

*Millisecond response time*. The rate of change in electrical output of a steam-electric plant is relatively slow because it takes time to turn up the flame or reactor, speed up the boiler feed pump, transfer heat from the flame through the boiler tubes or from the uranium dioxide through clad to increase steam production, and transport of steam to the turbine. Traditional Brayton power cycles have similar constraints. To boost power levels, the compressor must speed up to provide more air; only when more air is sent to the combustion chamber can more fuel be added. This is the reason for slow acceleration in jet aircraft. Time is required to speed up the air compressor. In contrast, in the nuclear-fossil combined cycle, the nuclear base load implies that the air compressor is operating at full speed with constant power input and constant air flow, with no acceleration of the compressor required when there is a change in power demand. Fuel can be injected as fast as the fuel valves open, with the initial power increase in milliseconds as the hot gas reaches the first turbine blades. No existing utility power system has the potential to so rapidly increase power levels.

There are major challenges and questions, however, this technology potentially implies that high-temperature reactors (such as the Advanced High-Temperature Reactor) have unique capabilities of variable power production with rapid response for meeting the needs for frequency control and spinning reserve. This would assist large electrical grids and be a major revolution for small grids where the grid size makes it difficult to ensure reliable electric generation and quality electricity.