Analyses of U.S. and R. F. Depleted-Uranium Concrete/Steel Transport and Storage Cask for Spent Nuclear Fuel

Leslie R. Dole
dolelr@ornl.gov

Juan J. Ferrada
ferradajj@ornl.gov

Oak Ridge National Laboratory

Sergey G. Ermichev (Сергей Ермичев)
esgr@rol.ru

Institute of Experimental Physics (VNIIEF)

Sarov, Nizhni Novgorod Region, Russia

2006 International High-Level Radioactive Waste Management Conference
American Nuclear Society
Las Vegas, Nevada
April 30–May 4, 2006

BACKGROUND

- **Combinations of gamma adsorbing DU and neutron absorbing hydrated binders are shown to effectively reduce the size and weight of casks**

- **DUCRETE will become one of the materials of choice for advanced spent nuclear fuel (SNF) casks**
  - Requires the demonstration of low-cost fabrication processes
  - Requires the demonstration of long-term durability under expected service conditions

Several DUCRETE™ Demonstration Programs have been Successfully Completed

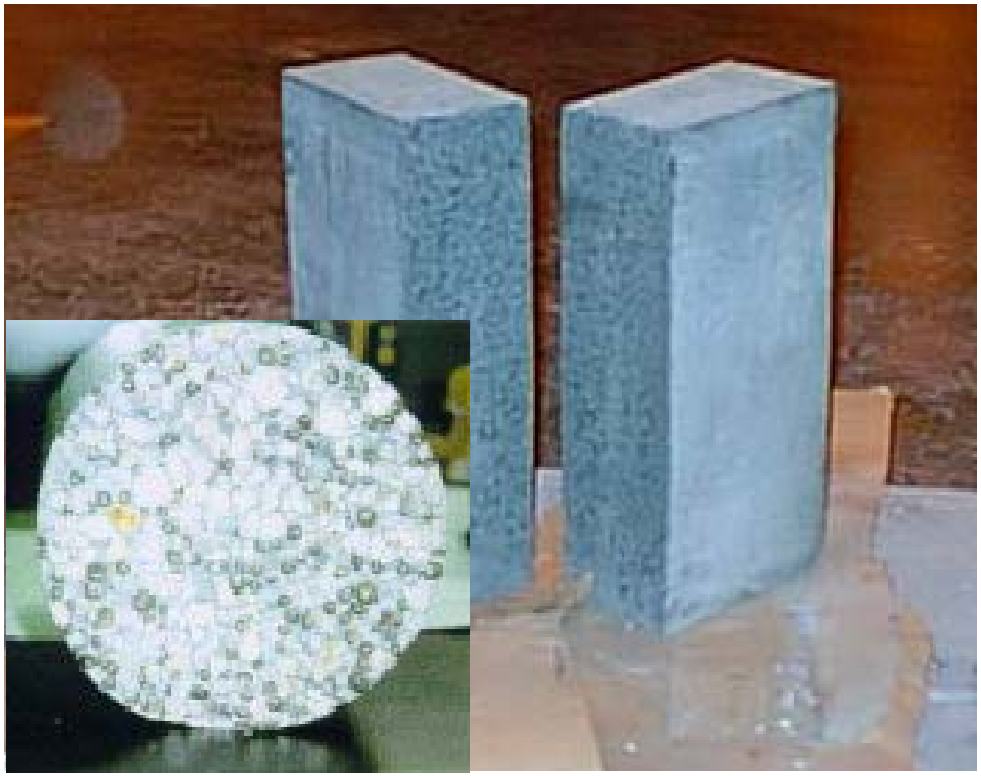

Test block sectioned after curing

30-gal-drum overpack

DUAGG DU Aggregates are Stabilized with Basalt Sintering Agent

Original DUAGG briquettes were pressed, solidified by liquid-phase sintering, then crushed, and gap-graded for use in high-strength DUCRETE at 5000 to 6000 psi (35–42MPa)

RF process crushes green pellets before sintering producing angular sintered aggregate that resulted in a RF DUCRETE with up to 9,000 psi (66MPa)

DUCRETE™ Storage Casks are Smaller and Lighter than Casks Constructed of Ordinary Concrete

For equivalent shielding capability, the DUCRETE™ casks are lighter and smaller in diameter than casks made from ordinary heavy-concrete

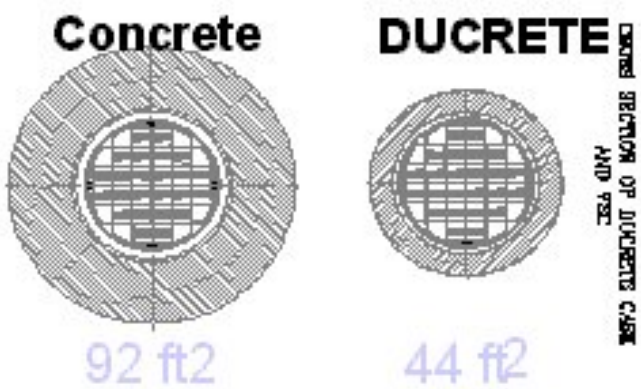

Comparison of conventional 24-PWR Sierra and DUCRETE™ spent fuel dry-storage casks/silos

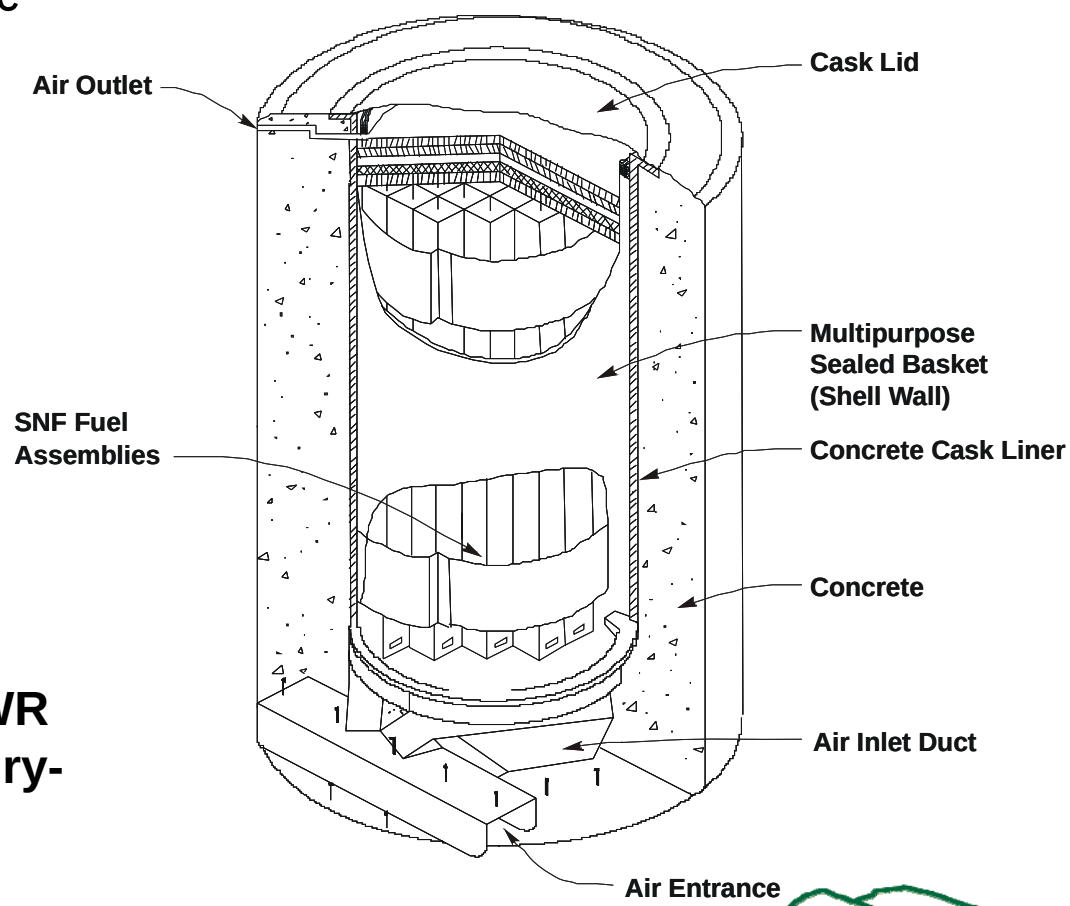

20cm (<8”) DUCRETE Thickness

(Source: 32 PWR, 4%, 60000 MWd/MTU, 5 years out)

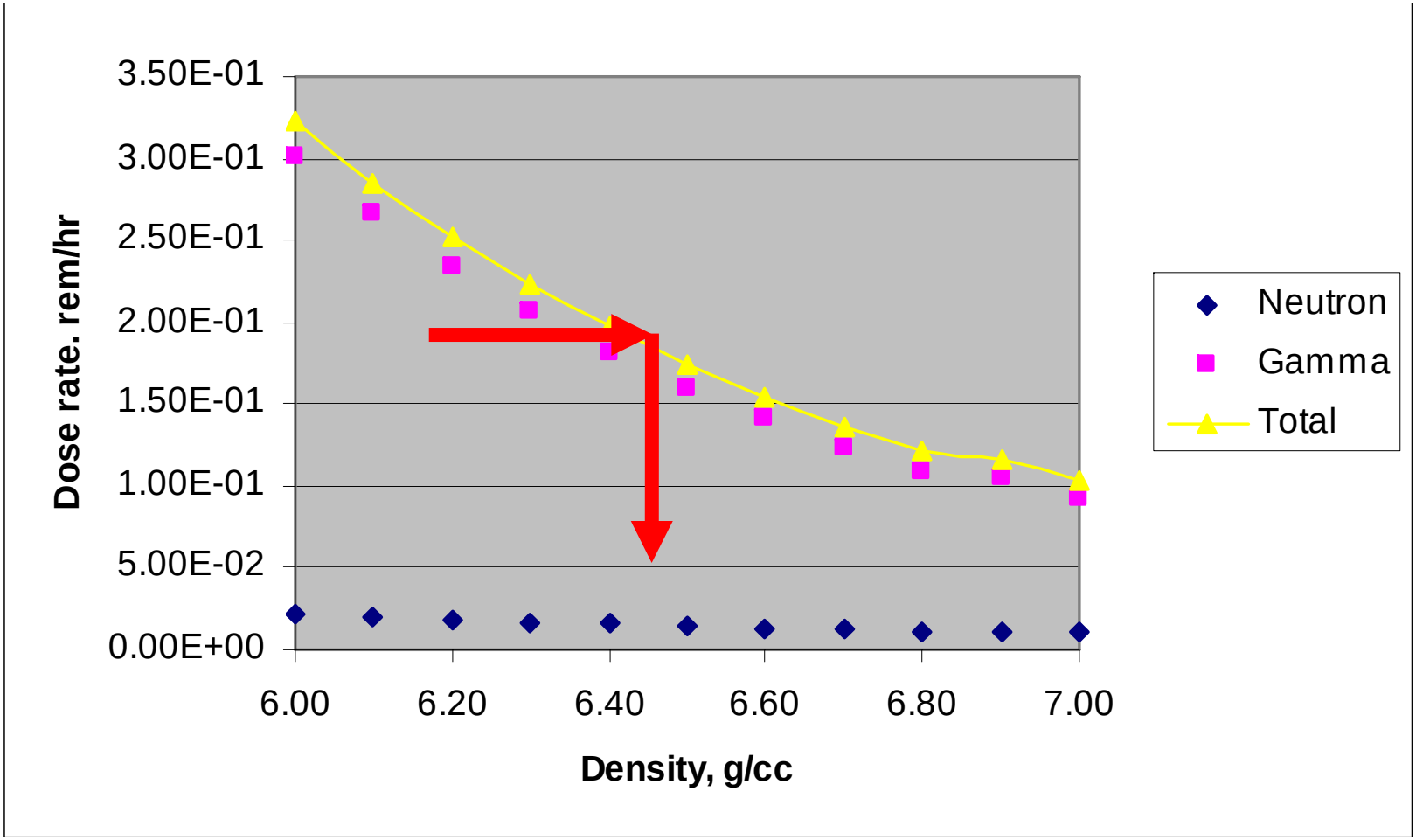

Surface dose vs. material density

SAS2 Source Term and Input Deck

- **Standard 24 or 32 PWR fuel assemblies**
- **Burnup: 40000–60000 MWd/MTU**
- **Initial fuel enrichment 4.0%**
- **Compose SAS2 input deck based on the fuel assembly history:**
  - **3 years in reactor core**
  - **5 years cooling after**

Increasing the Number of Spent Fuel Assemblies in various storage casks

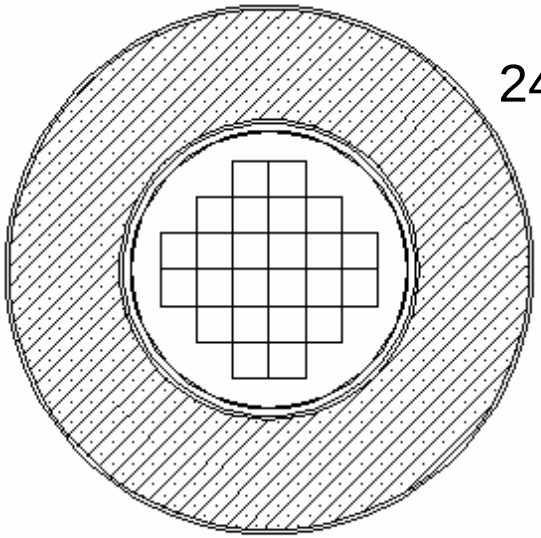

24 PWR

(a): 24 PWR SNF assemblies
Weight (with SNF) = 154 tons
Outside radius = 169 cm
Footprint = 8.97 m2
Inside cavity radius = 87.9 cm
Shielding thickness = 71 cm

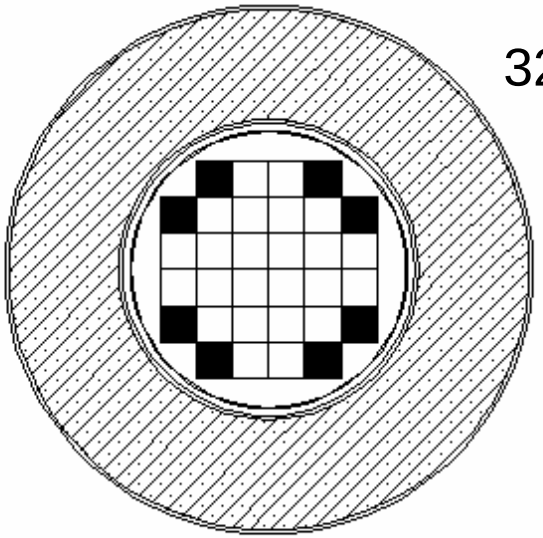

32 PWR

(b): 32 PWR SNF assemblies
Weight (with SNF) = 156 tons
Outside radius = 169 cm
Footprint = 8.97 m2
Inside cavity radius = 87.9 cm
Shielding thickness = 71 cm

Conventional Concrete Spent Nuclear Fuel (SNF) casks

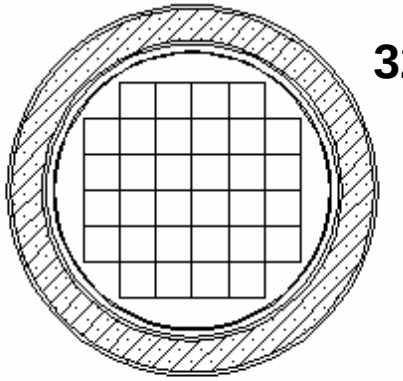

32 PWR

(c): 32 PWR SNF assemblies
Weight (with SNF) = 127 tons
Outside radius = 119 cm
Footprint = 4.42 m2
Inside cavity radius = 87.9 cm
Shielding thickness = 20 cm

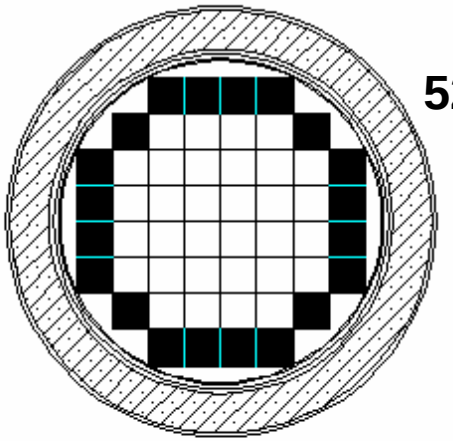

52 PWR

(d): 52 PWR SNF assemblies
Weight (with SNF) = 177 tons
Outside radius = 137 cm
Footprint = 5.94 m2
Inside cavity radius = 103 cm
Shielding thickness = 25 cm

DUCRETE SNF casks

Conservative Estimates of Assemblies

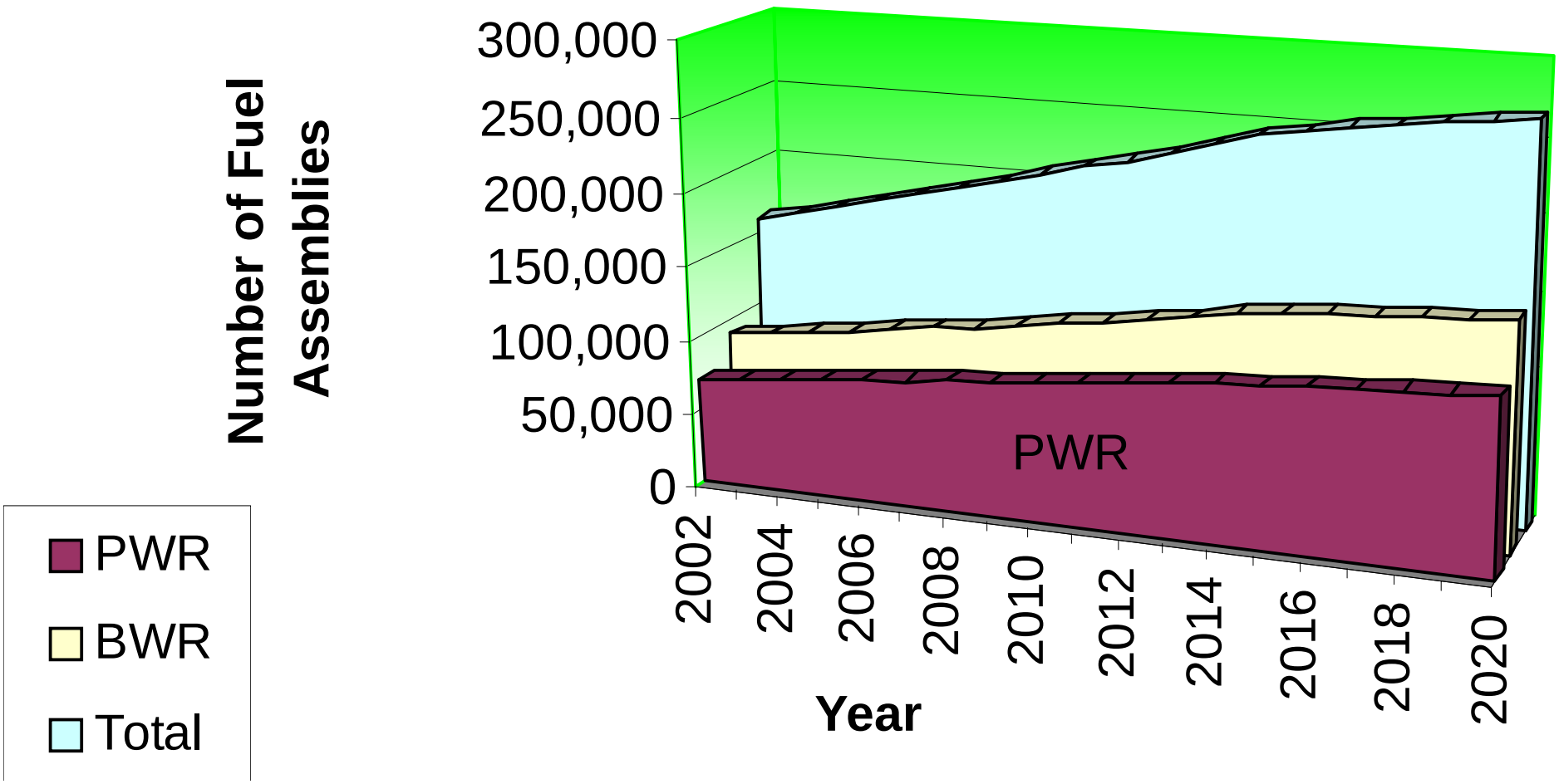

Yearly Rate of Spent Fuel Casks

(24 PWR & 61 BWR)

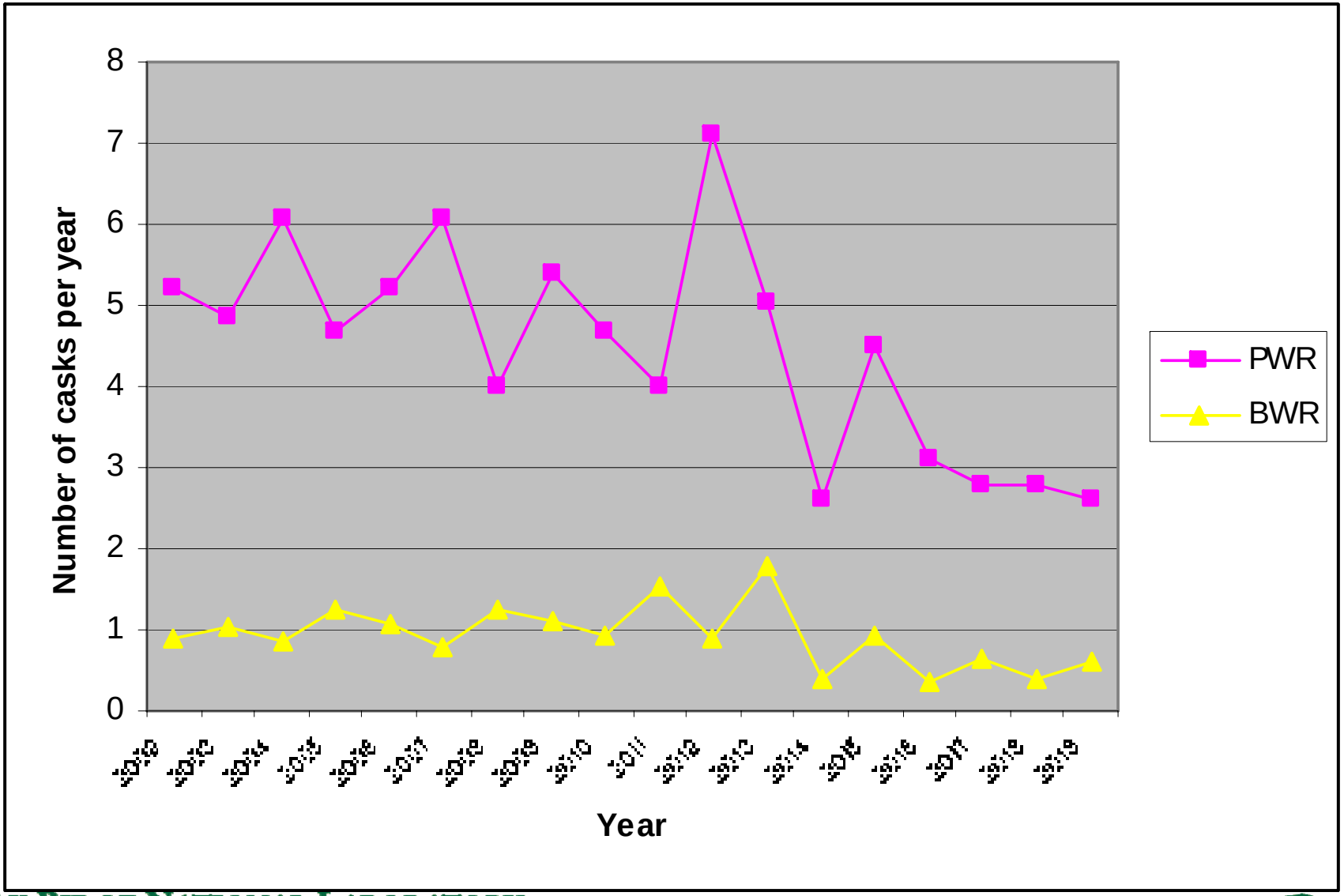

Hypothetical Number of Storage Casks for the Accumulated PWR and BWR Assemblies (24 & 61)

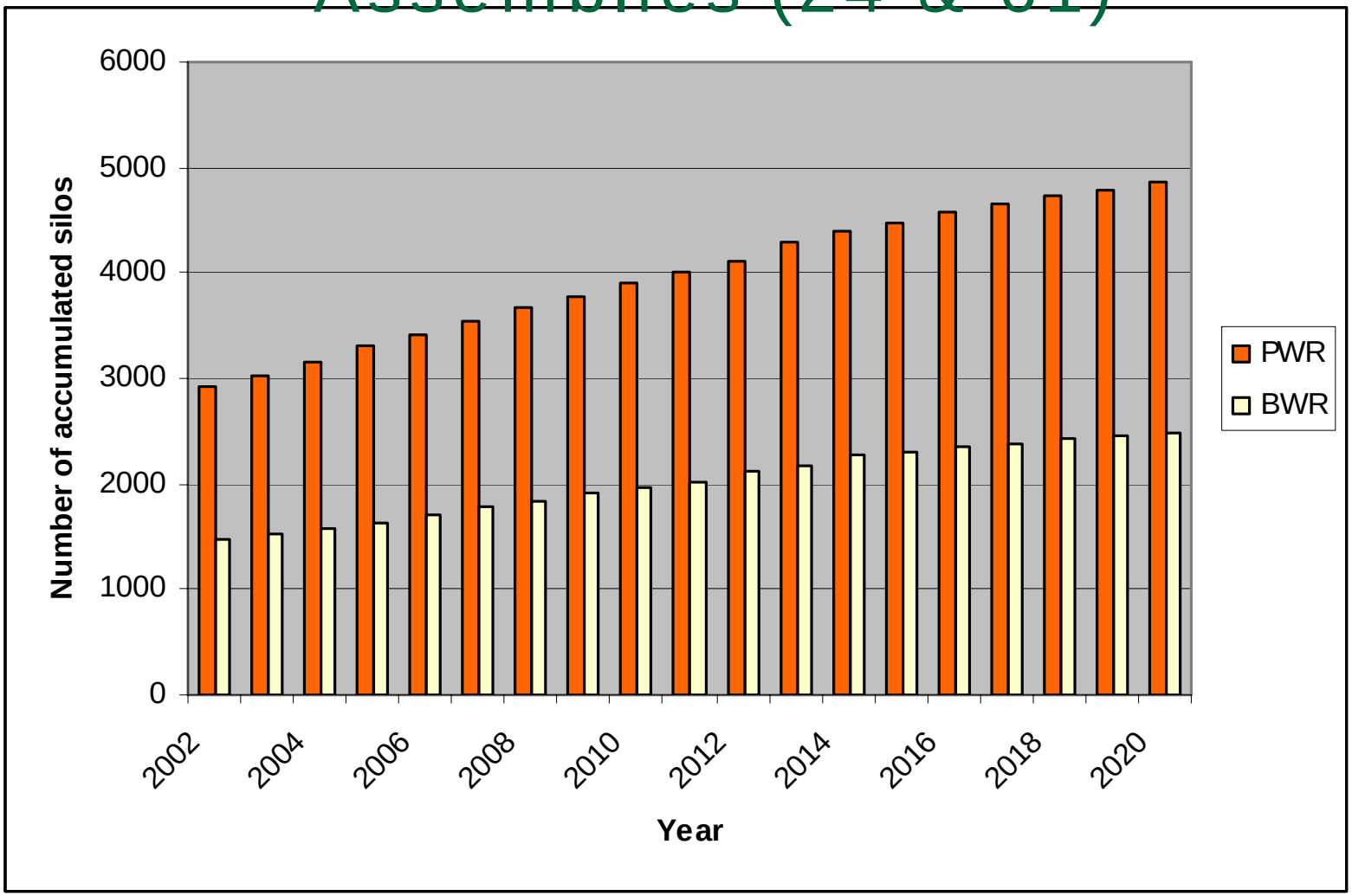

Consumption in Storage/Transport Casks for Projected Commercial SNF

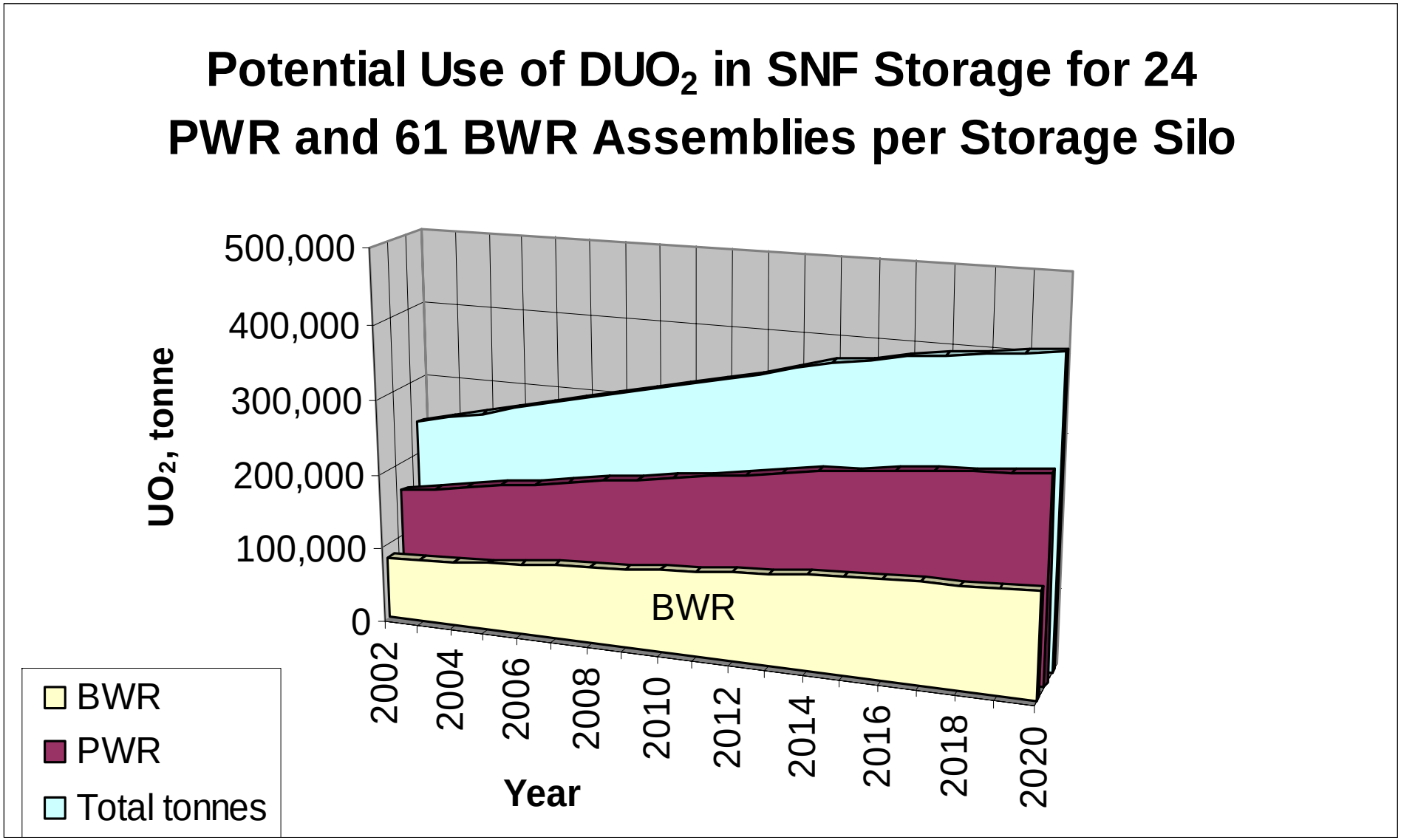

DU Aggregates (DUAGG) are Stabilized with Basalt Sintering Agent

Original DUAGG briquettes were pressed, solidified by liquid-phase sintering, then crushed, and gap-graded for use in high-strength DUCRETE at 5000 to 6000 psi (35–42MPa)

RF process crushes green pellets before sintering producing angular sintered aggregate that resulted in a RF DUCRETE with up to 9,000 psi (66MPa)

Original DUAGG Process Requirements

- The conversion and reduction of the stockpiled DUF_6 produces DUO_2 powder or fine granules

- The powder must be sintered into dense aggregate-pellets for the concrete to carry compressive stress (>5,000 psi)

- To stop oxidation of DUO_2 into DUO_3 or even DU_3O_8, the raw DUO_2 must be treated and formed for use in stable high-strength concretes

- A basaltic sintering agent reduces sintering temperatures and makes a protective coating that chemically stabilized the DUAGG

Baseline Assumptions for Scaling DUAGG Production Facility Based on ~1/3 of 150 Casks/Year U.S. Domestic Market

- Production rate of 2,834 tonne/year to meet 30% penetration of domestic market (~50 casks)
- Receive DUO_2 from external source
- Process consists of milling, blending, pressing, sintering, and crushing material
- Gap-grades and amends DUAGG product for adding to cement to form DUCRETE off-site

Process Comparison

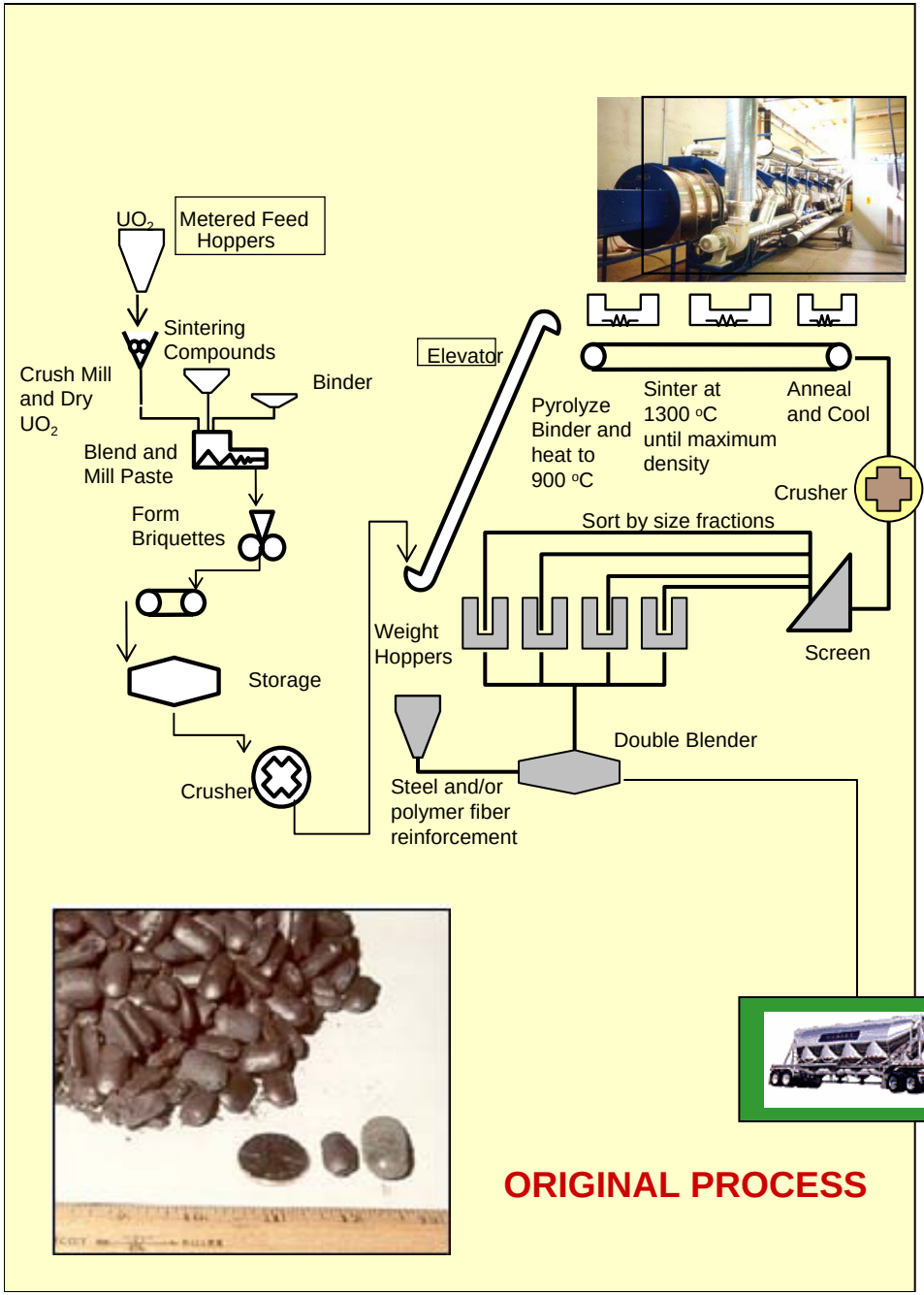

ORIGINAL PROCESS

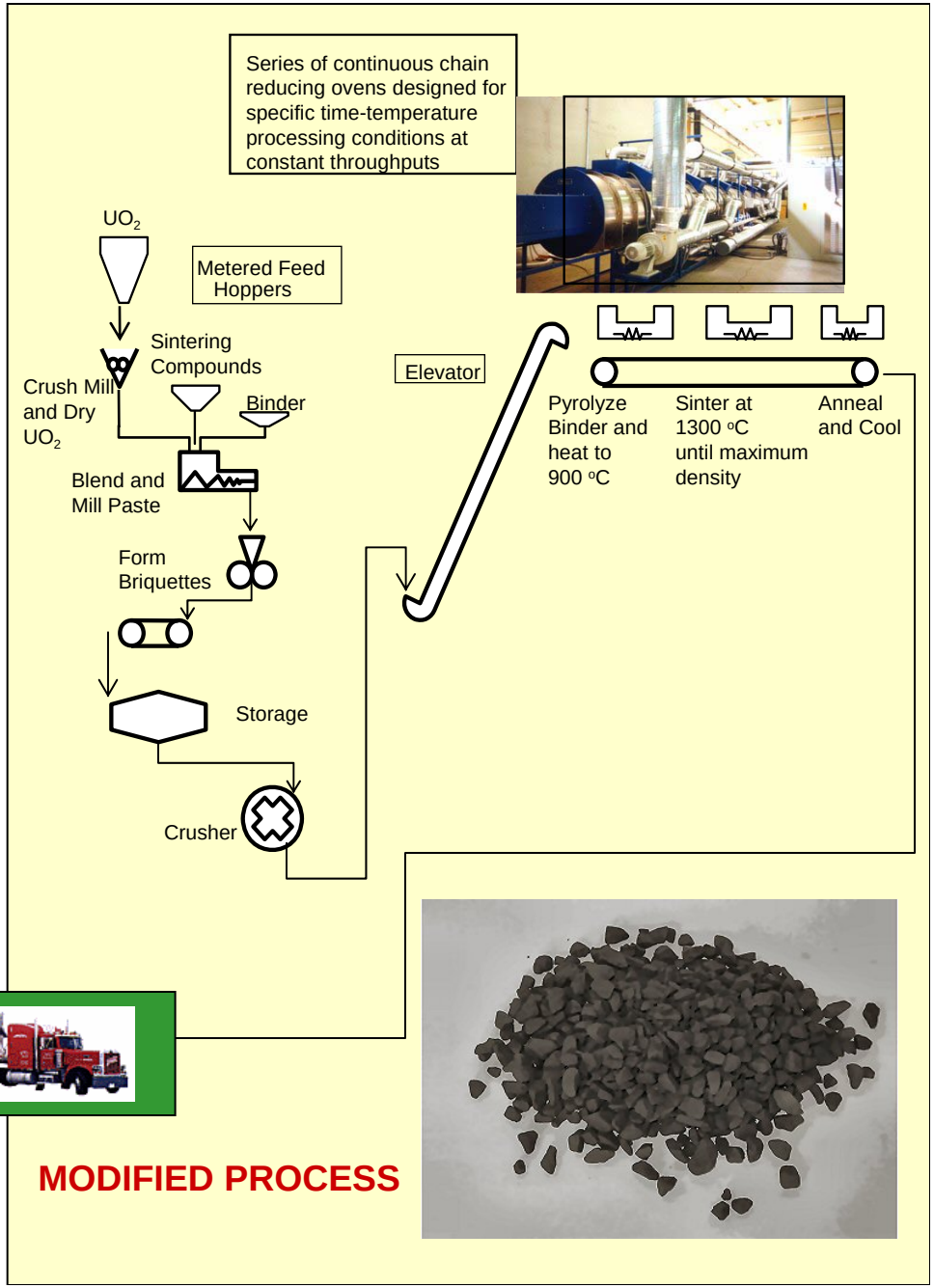

MODIFIED PROCESS

DUAGG Process Space Requirements

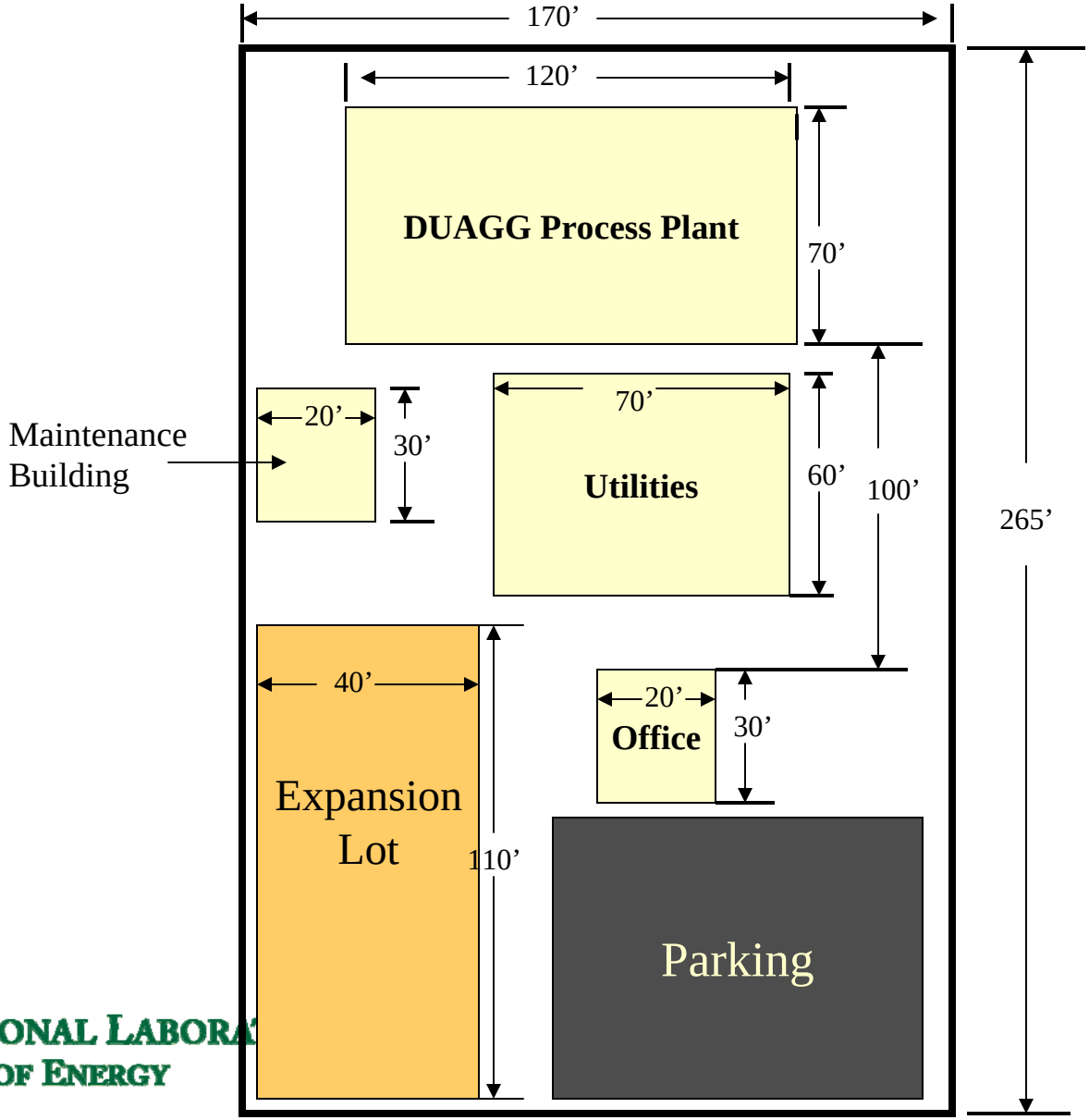

Capital Cost Comparison of Original and RF DUAGG Production Facilities

Capital Cost Item	Original Process	Modified RF Process
Civil/site preparation	500,000	500,000
Utilities building services	56,000	56,000
Process equipment, land, and buildings	5,124,000	3,854,000
Special process services	35,000	35,000
Engineering	1,101,000	618,000
Piping	234,000	192,000
Installation labor	805,000	482,000
Electrical	220,000	97,000
Spare parts	210,000	78,000
Management	750,000	482,000
Shipping	196,000	96,350
Safety system	400,000	231,240
Contingencies	1,926,200	1,680,398
Total capital cost	11,557,200	8,401,988

DUAGG Production Cost Comparison (4 year capital recovery)

ORIGINAL PROCESS				
	$384/tonne DUO_2 Disposal Credit Labor cost ($/h)		Baseline: No Credit for DUO_2 Disposal Labor cost ($/h)	
	80	40	80	40
Capital	$11.6M	$11.6M	$11.6M	$11.6M
Operating (year)	$5.2M	$3.8M	$6.4M	$4.7M
Cost DUAGG per Unit (cask)	$104K ($1.67/kg)	$76K ($1.34/kg)	$129K ($2.27/kg)	$94.9K ($1.57/kg)
MODIFIED RF PROCESS				
	$384/tonne DUO_2 Disposal Credit Labor cost ($/h)		Baseline: No Credit for DUO_2 Disposal Labor cost ($/h	
	80	40	80	40
Capital	$8.4M	$8.4M	$8.4M	$8.4M
Operating (year)	$4.3M	$2.9M	$5.4M	$4M
Unit (cask)	$86K ($1.5/kg)	$58K ($1.02/kg)	$108K ($1.89/kg)	$80K ($1.40/kg)

Assumptions for the Cask Fabrication Plant from a Private Firm Stand-point

- The baseline case assumes a penetration of 30% in the spent fuel cask industry that translates in the manufacturing of 50 casks/year
- The manufacturing plant receives DUAGG, cement, and steel pre-fabricated parts to make the casks
- It takes three days (1 shift) to make a cask
- The plant will work 5 days a week
- The plant will work 150 days/year (30 weeks/year or 1200 hours/year)

Baseline Cask Fabrication Based on GNB's Technology CONSTOR Cask

Fabrication Sequence

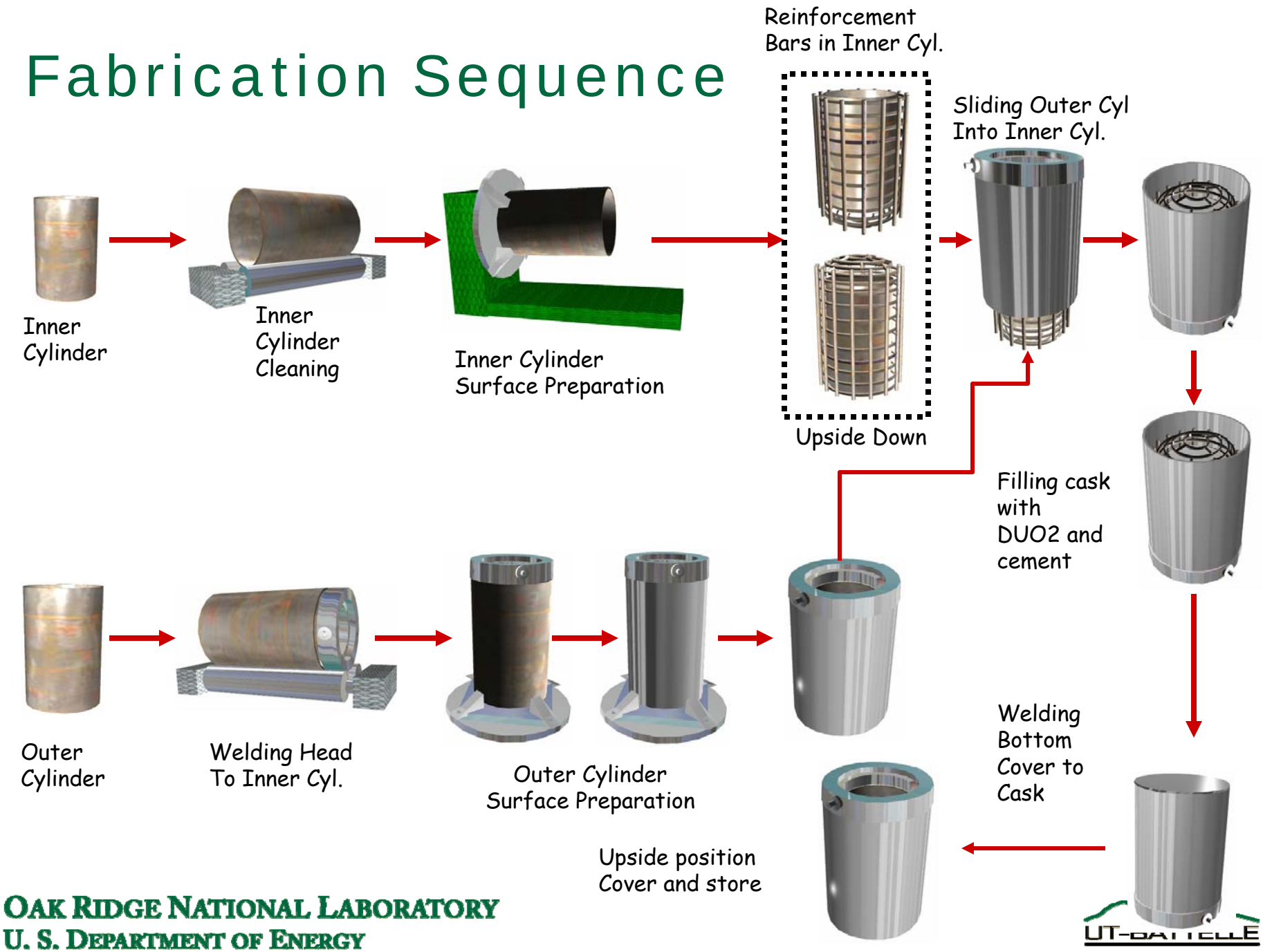

Fabrication Stages

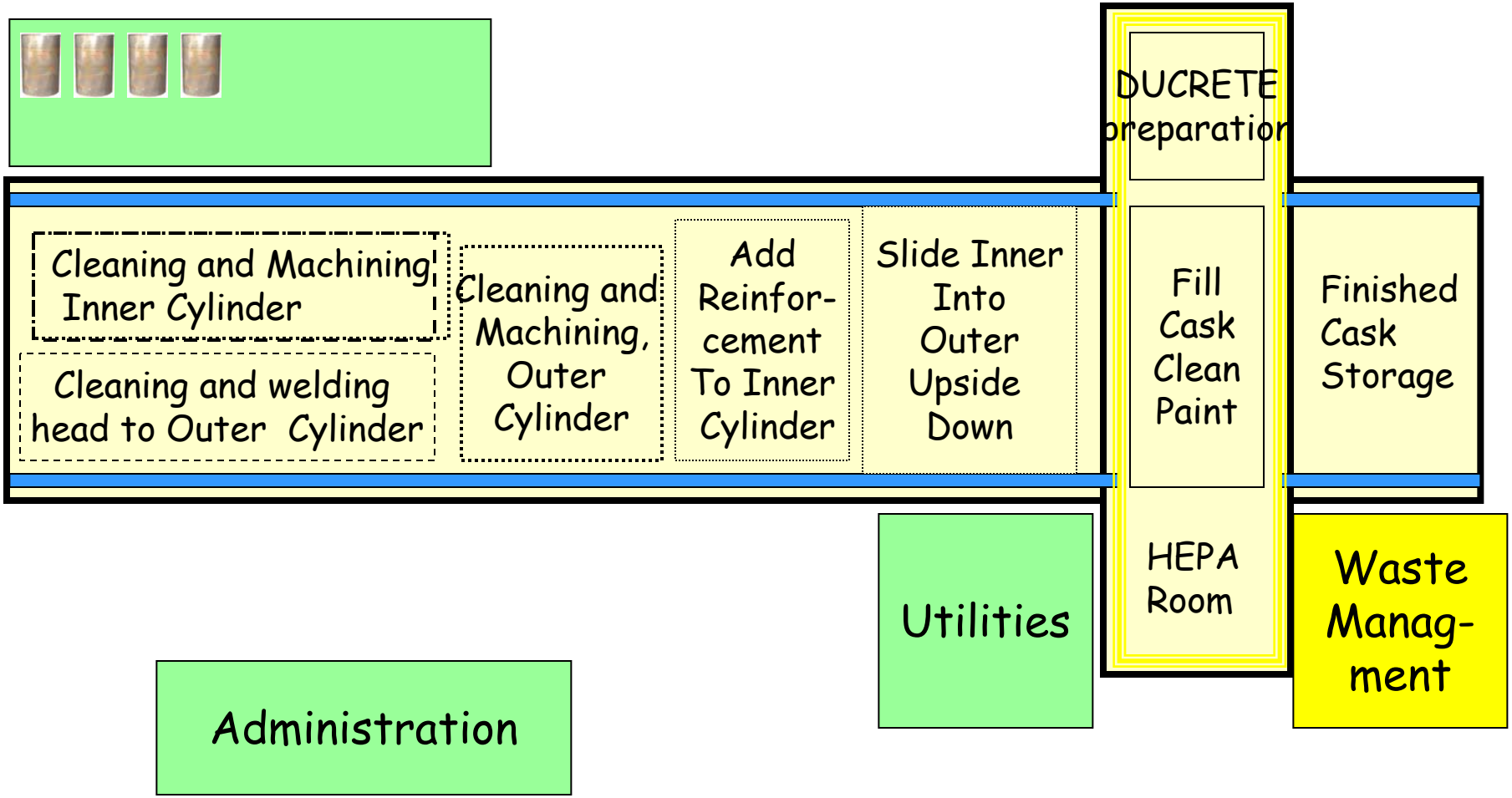

Conservative DUCRETE Cask Cost Comparison

ORIGINAL DUAGG PROCESS	
Cost item	**Cost estimate ($/year)**
Labor	11,337,000
Steel (inner and outer cylinders, covers, lids, reinforcement @ $33,000 per cask)	1,675,000
DUAGG (assumed the most conservative cost of the material @ $128,000 per cask)	6,400,000
Cement	100,000
Waste management	500,000
Energy	100,000
Capital recovery (assumed 4 years of recovery or 25%)	4,620,000
Total operating cost, $/year	24,732,000
Unit cost, $/cask	**494,640**
MODIFIED RF DUAGG PROCESS	
Labor	11,337,000
Steel (inner and outer cylinders, covers, lids, reinforcement @$33,000/cask)	1,675,000
DUAGG (assumed the most conservative cost of the material @$108,000/cask)	5,400,000
Cement	100,000
Waste management	500,000
Energy	100,000
Capital recovery (assumed 4 years of recovery or 25%)	4,620,000
Total operating cost, $/year	23,732,000
Unit cost, $/cask	**474,640**

Conclusions

- Using DU dioxide aggregates in concrete for shielding is technically feasible using off-the-shelf processing and production technologies

- Using DUAGG/DUCRETE in casks used to store and dispose of SNF can reuse the nation's inventory of DU

- RF DUAGG process improvement reduce the costs of aggregate production in the U.S. by 25–30% and overall cask production costs by 3–4%, under very conservative assumptions

Conclusions (continued)

- A current incomplete cost analysis shows that the estimated simple manufacturing costs of DUCRETE storage casks, ~$400–500K, are well within the current cask market cost, considering the very conservative assumptions used in this baseline case

- These simple manufacturing cost does not include licensing, marketing, transportation, or other significant costs

- These results show that DUCRETE casks can be made at a cost that could be competitive in today's market

Slides for Discussion

Lay-Out of the Plant

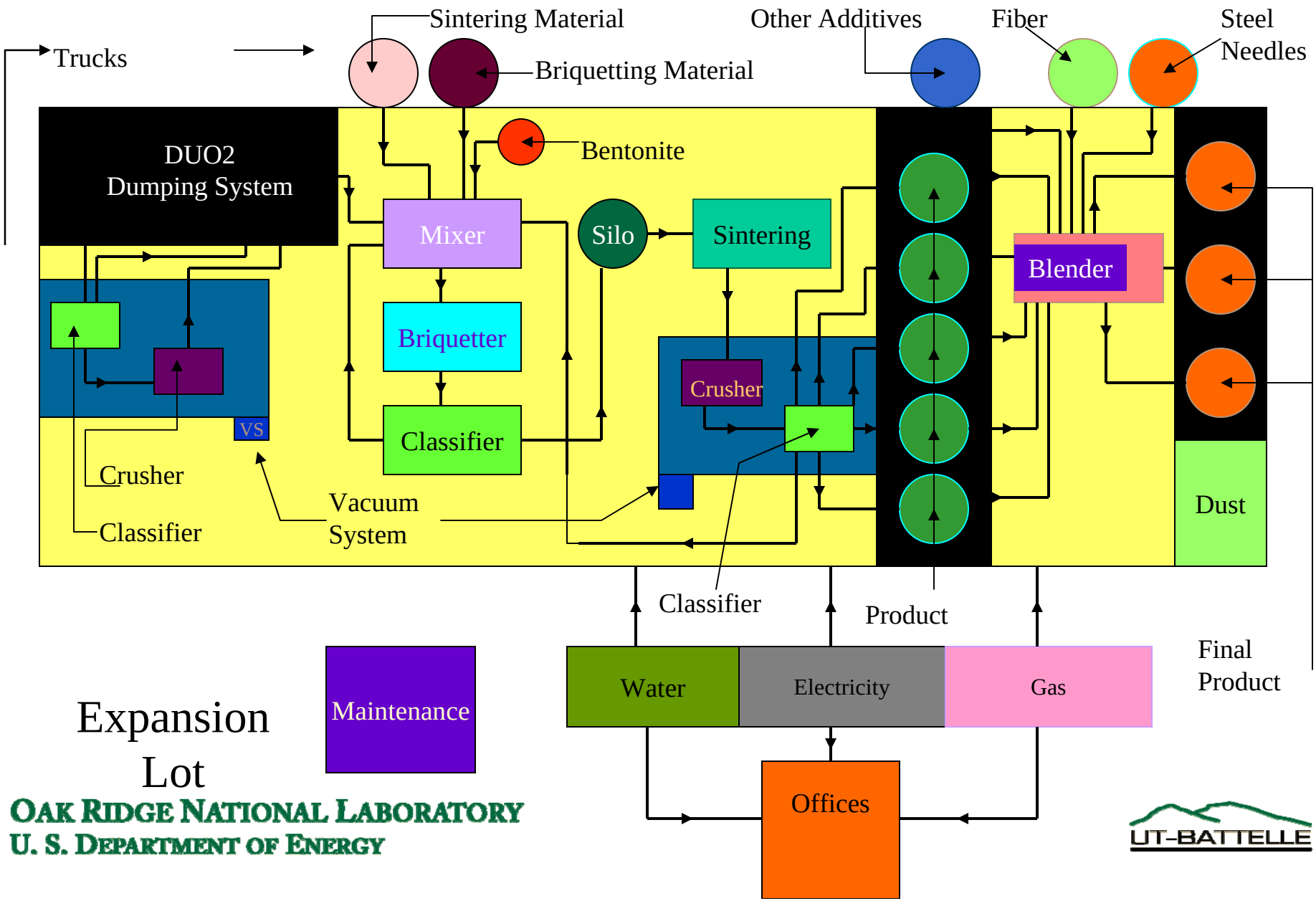

OAK RIDGE NATIONAL LABORATORY
U. S. DEPARTMENT OF ENERGY

UT-BATTELLE