Manufacturing and Economic Studies for DUO_2—Steel Cermet Spent Fuel Casks

Charles W. Forsberg
Terry N. Tiegs

2006 International High-Level Radioactive Waste Management Conference
Session: Waste Casks and Transportation; Paper Number: 147987
Wednesday, May 3, 2006, 8:30 a.m.
Reno, Nevada

Oak Ridge National Laboratory*
P.O. Box 2008, Oak Ridge, Tennessee 37831-6165
United States of America
E-mail: forsbergcw@ornl.gov

**Notice: This manuscript has been authored by UT-Battelle, LLC, under contract DE-AC05-00OR22725 with the U.S. Department of Energy. The United States Government retains and the publisher, by accepting the article for publication, acknowledges that the United States Government retains a non-exclusive, paid-up, irrevocable, world-wide license to publish or reproduce the published form of this manuscript, or allow others to do so, for United States Government purposes. File name: DU Cermet ppt: HLW06.CermetCost

OAK RIDGE NATIONAL LABORATORY
U. S. DEPARTMENT OF ENERGY

Outline

- Cermet spent nuclear fuel (SNF) cask description
- Manufacturing
- Costs
- Conclusions

GNS Storage and Transport Cask

Cermets Combine the Best Properties of Ceramics (Shielding, Hardness) with Those of Metals (Strength, Ductility)

Cermets Are Used for Demanding Applications

Brake Shoes

Main Battle Tank Armor

Cutting Tools

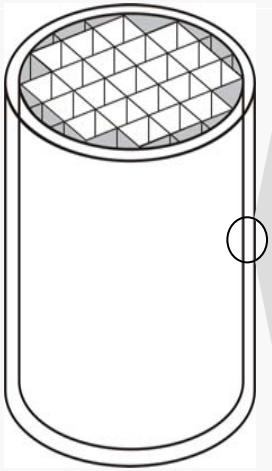

Cermet Body Cross Section

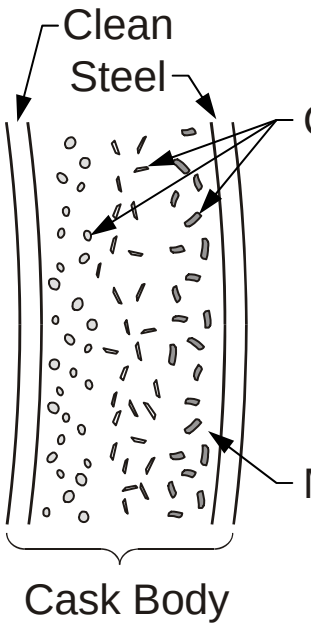

Ceramics
- Armor (Al_2O_3, SiC)
- Neutron Shielding (DUO_2, Gd_2O_3)
- Gamma Shielding (DUO_2)

Metal Matrix
- Strength
- Thermal Conductivity

Cermet Casks will be Adopted if Manufacturing Costs are Low

- Cermet performance can far exceed the performance of other cask materials
- Cermets incorporate the best properties of metals and ceramics
- Materials can be modified to meet requirements
  - Physical protection (match armor)
  - Maximum payload for a given weight or size constraint
  - High thermal conductivity
  - Nuclear properties
- Cermet casks may or may not contain DUO_2 (Different ceramics for different requirements)

Cermet Cask Manufacturing Options

- Two manufacturing options are being examined in the United States
  - Forged Cermet Cylinder (FCC) process
  - Cermet Extrusion Section (CES) process
- Both processes use powder metallurgy methods that enable variable composition cermets
  - CES process discussed herein
  - FCC process
    - Potentially better economics at large manufacturing rates; but, higher manufacturing-equipment capital costs
    - Greater R&D requirements
- A cement-casting process is being developed in Russia (paper at conference)

Cermet Extruded Section (CES) Process

Cermet Extrusion Section Cask

- Components of cask
  - External steel shell
  - Internal steel shell
  - Cermet sections
- Cermet sections have a steel exterior and a cermet interior
- Considering 12 to 48 cermet sections per cask

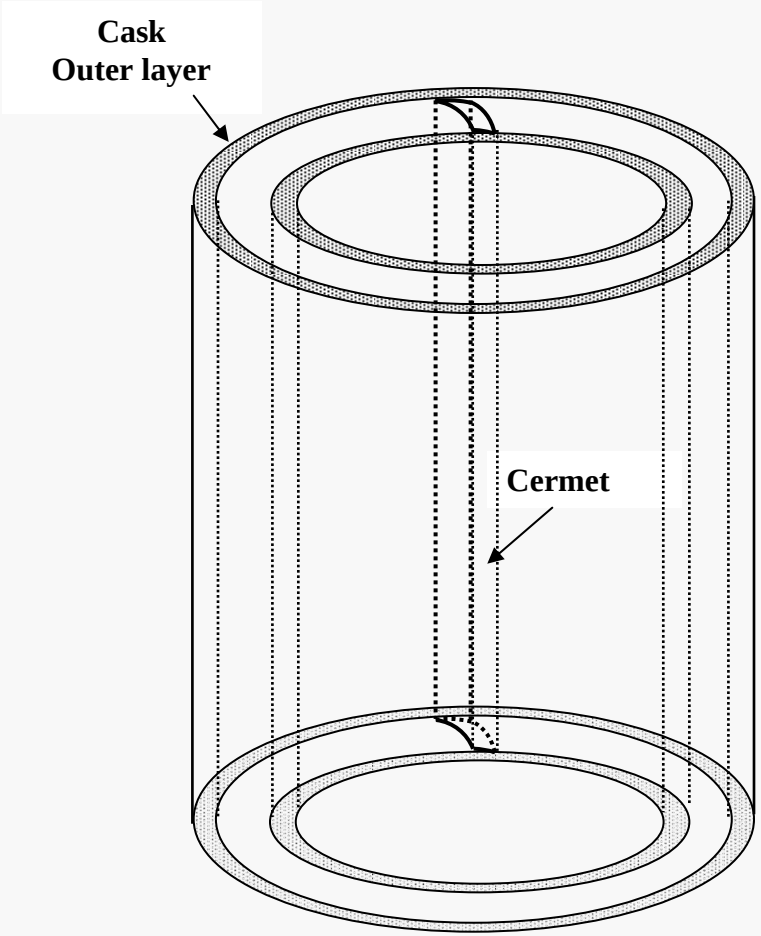

Cermet Sections are Curved to Ensure Uniform Radiation Shielding

- Manufacturing process requires the cermet to be made in a can
- Steel-can shielding properties are different than those of the cermet
- Cermet sections must be curved to have the same shielding everywhere
  - Equal thickness of steel and cermet through cask
- Smaller cermet extrusions (more sections per cask) imply cermet sections that are closer to rectangular in shape

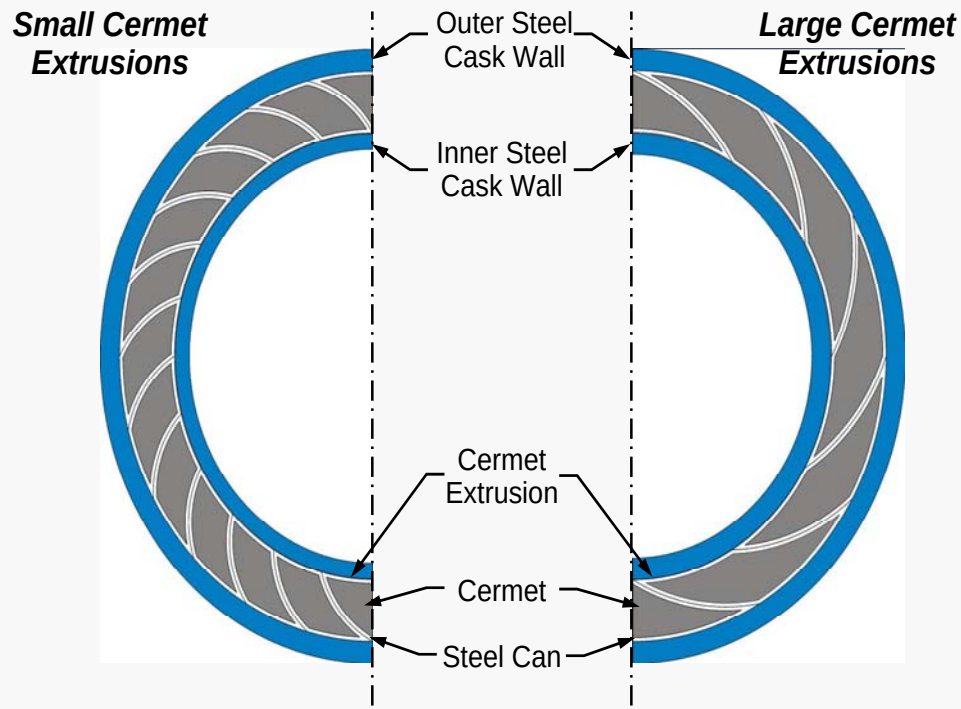

CES Process Steps

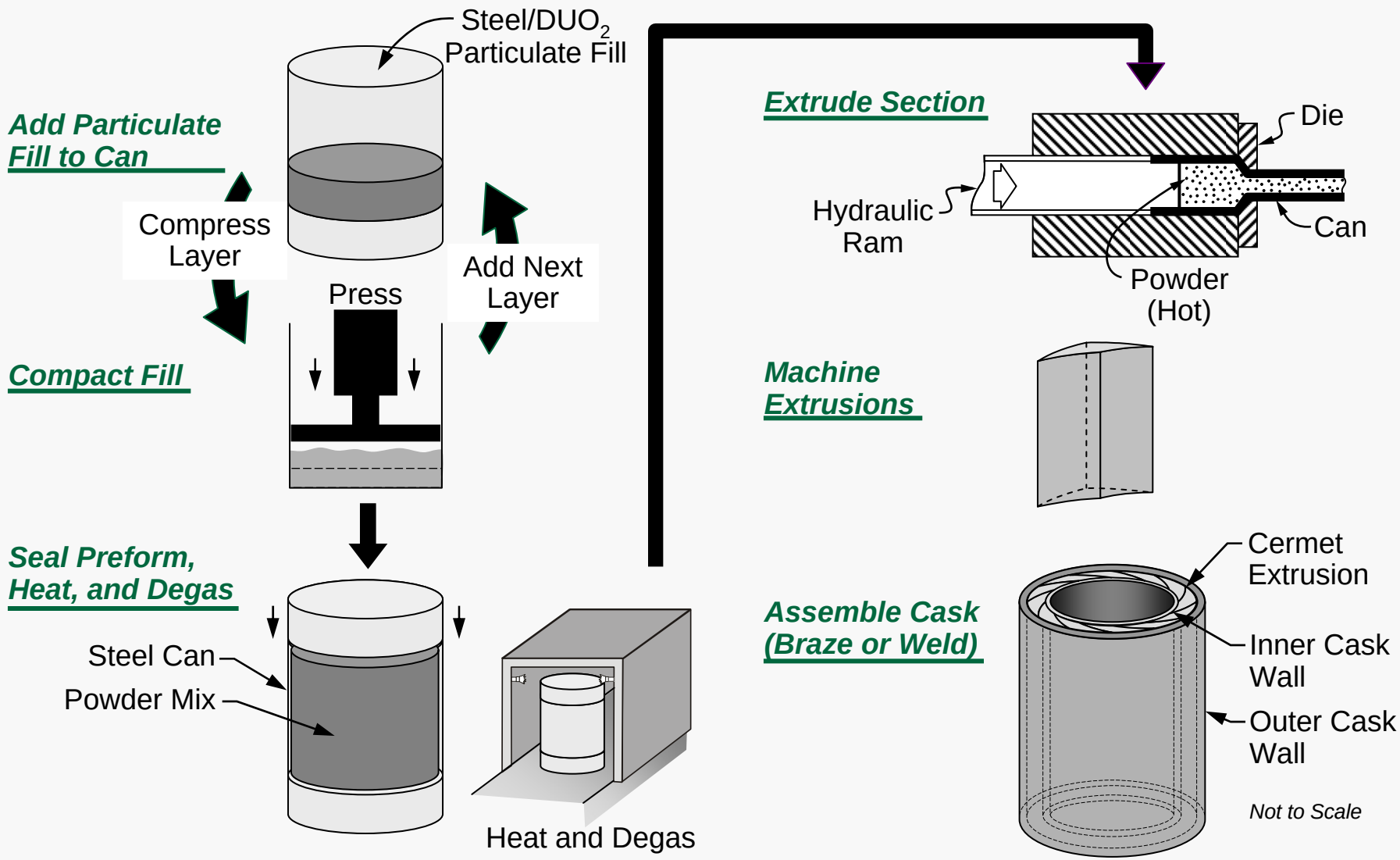

CES Step I: Filling Extrusion Cans with Steel Powder and DUO_2 Particulate

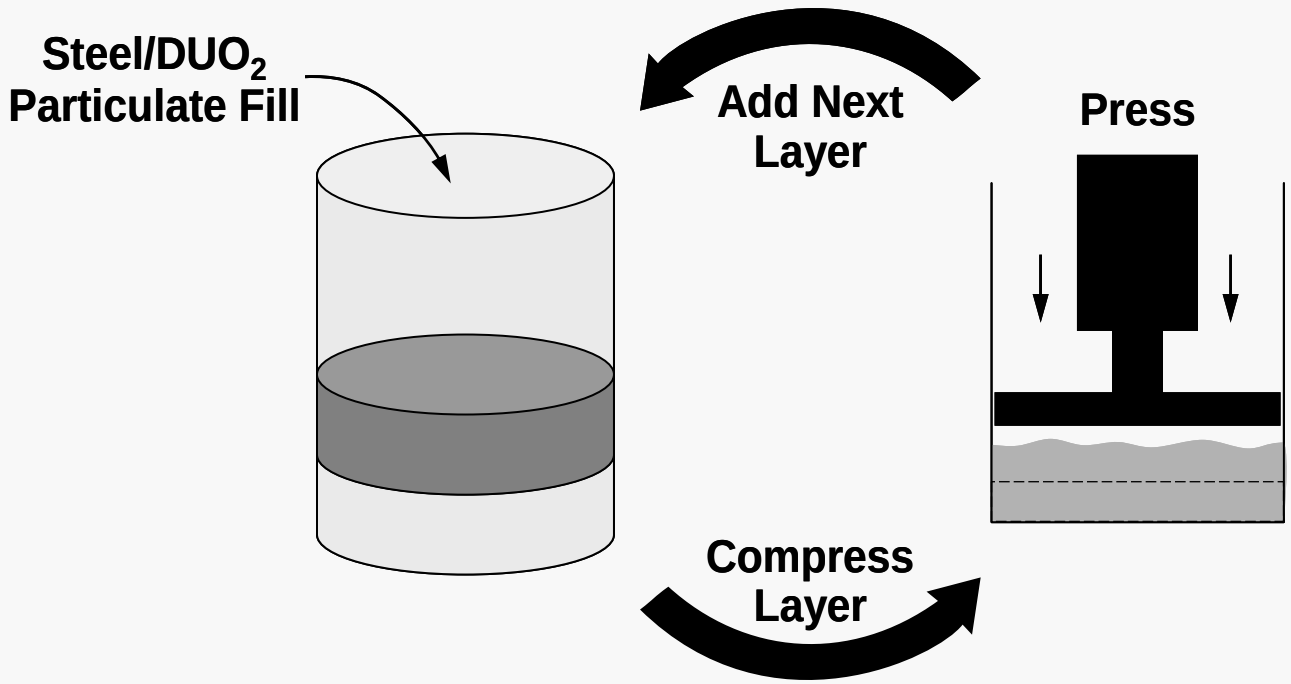

Add Particulate Fill to Can

Compact Fill

Powder-Mixture Segregation Tests Determined the Thickness of Individual Steel-DUO_2 Powder Layers

- **Powder mixtures can separate on handling**
- **Tests define allowable thickness of powder before compression**
  - **7-cm cylinder of HfO_2 mix and iron powder**
  - **2 hours on vibration table**
  - **Limited segregation**
- **Tests define maximum layer of powder mixture before pre-compaction**

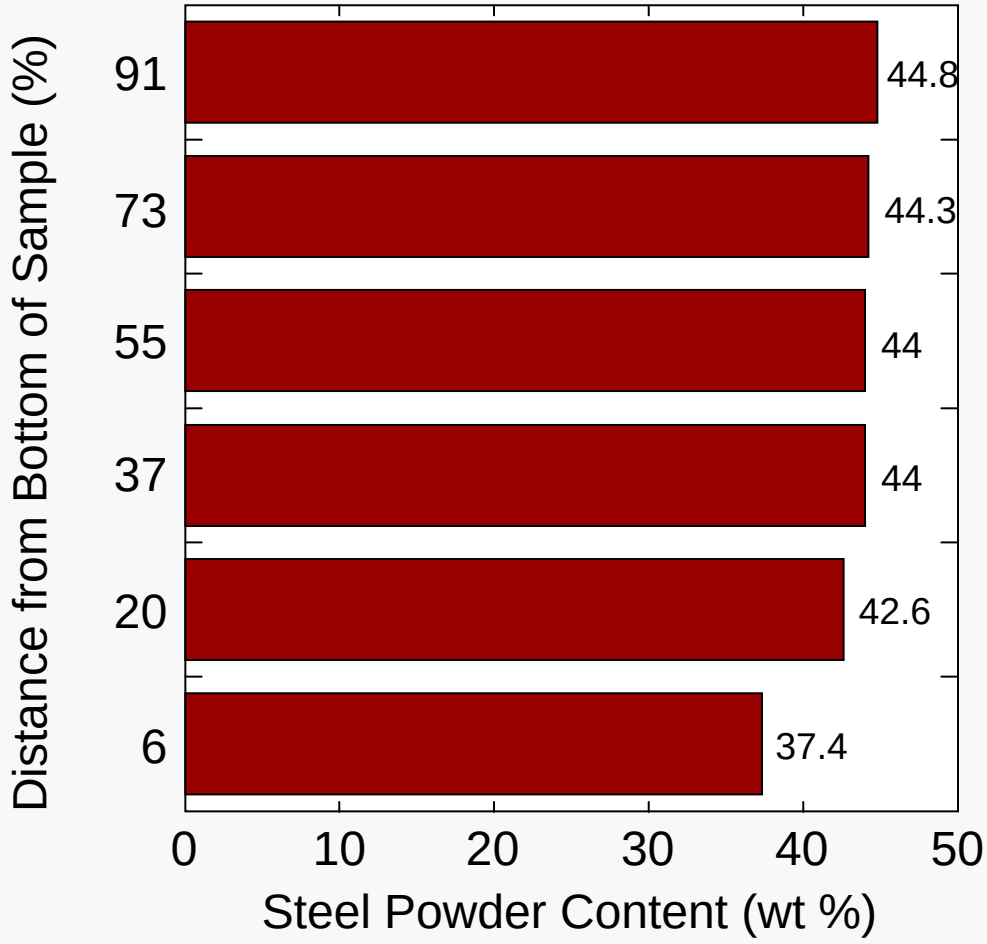

Compression Testing Defined the Required Consolidation Pressures

- Powder mix compressed to minimize high-temperature consolidation
- Tests to determine optimum forces for compression
  - Low pressure minimizes cost
  - High pressure maximizes density

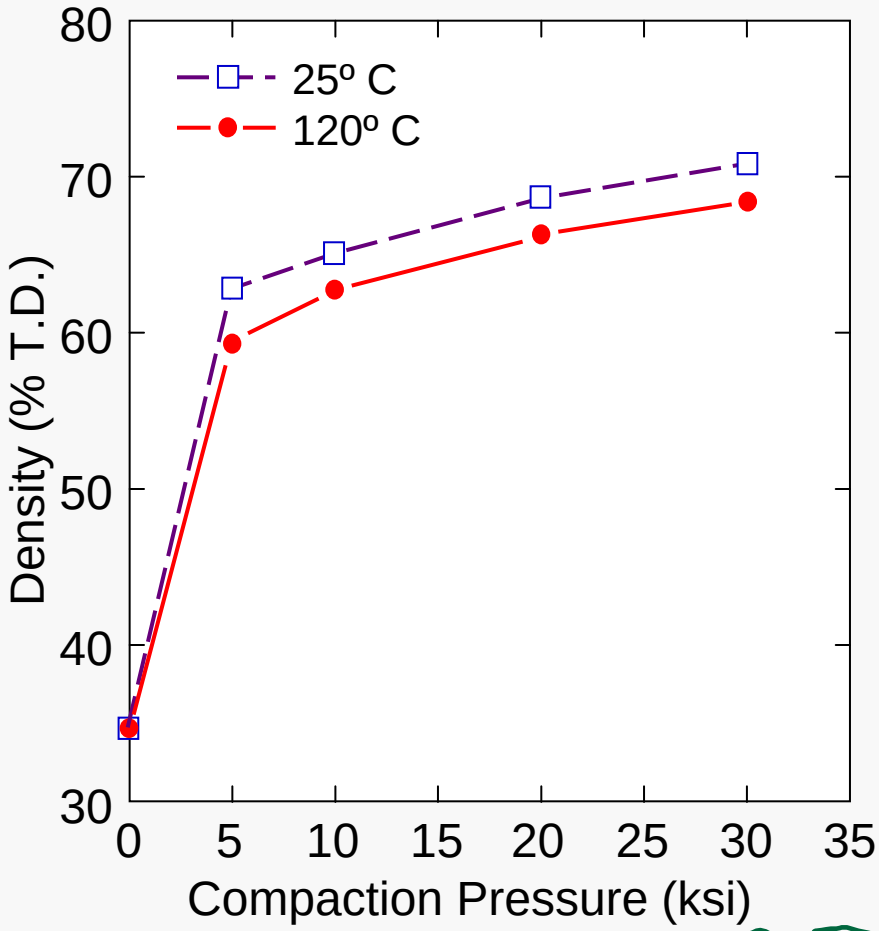

CES Step 2: Sealing Can

(Add Lid, Weld Lid to Extrusion Can, Heat, and Degas)

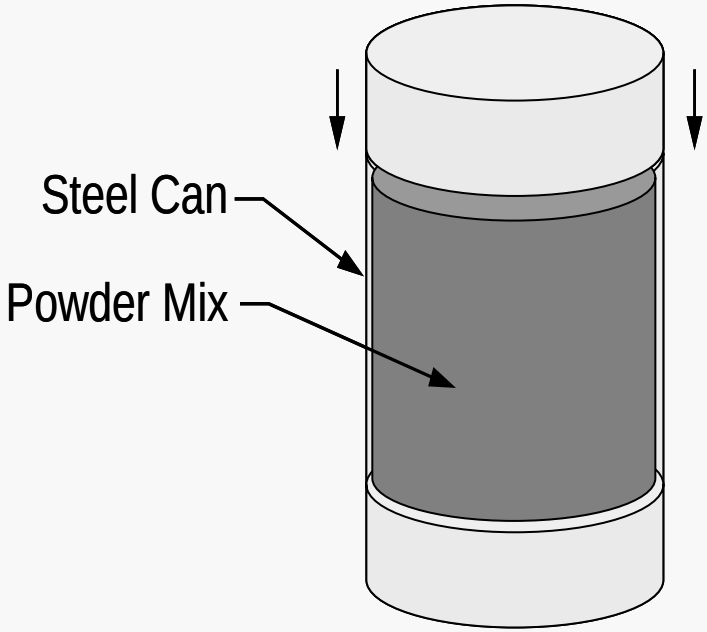

Weld Lid on Preform

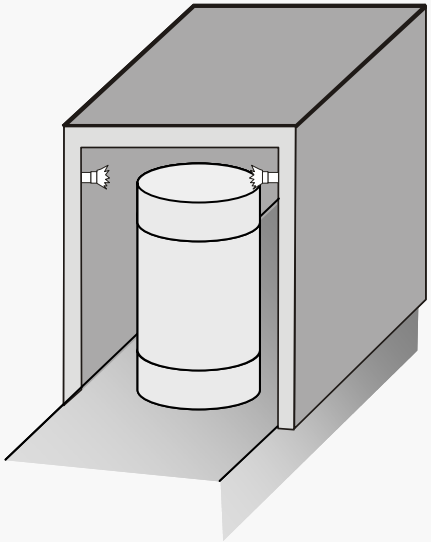

Heat and Degas

CES Step 3: Extrusion

- **Operations**
  - Converts round can to the proper geometry
  - Converts powder mixture to a strong cermet
- **Multistep process**
  - Heat can
  - Extrude
  - Can require more than one extrusion step
- **Technical advances enable extrusion of steel**

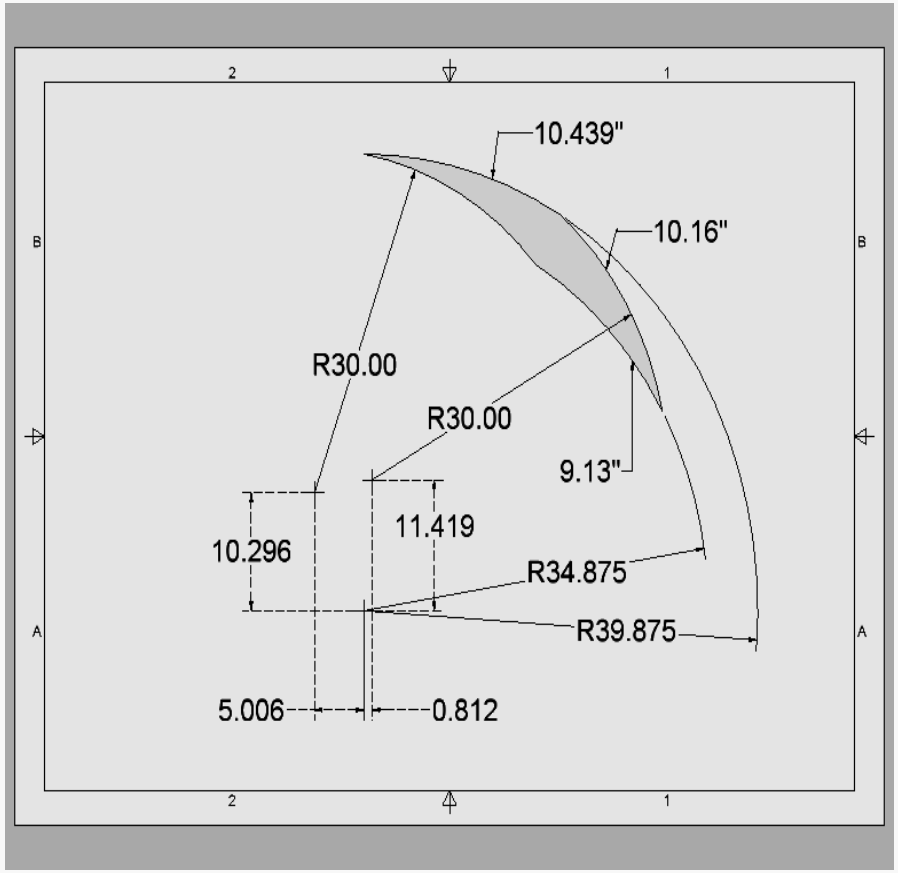

CES Step 3: Extrusion

(Ram Pushes Heated Canned Powder Through a Die)

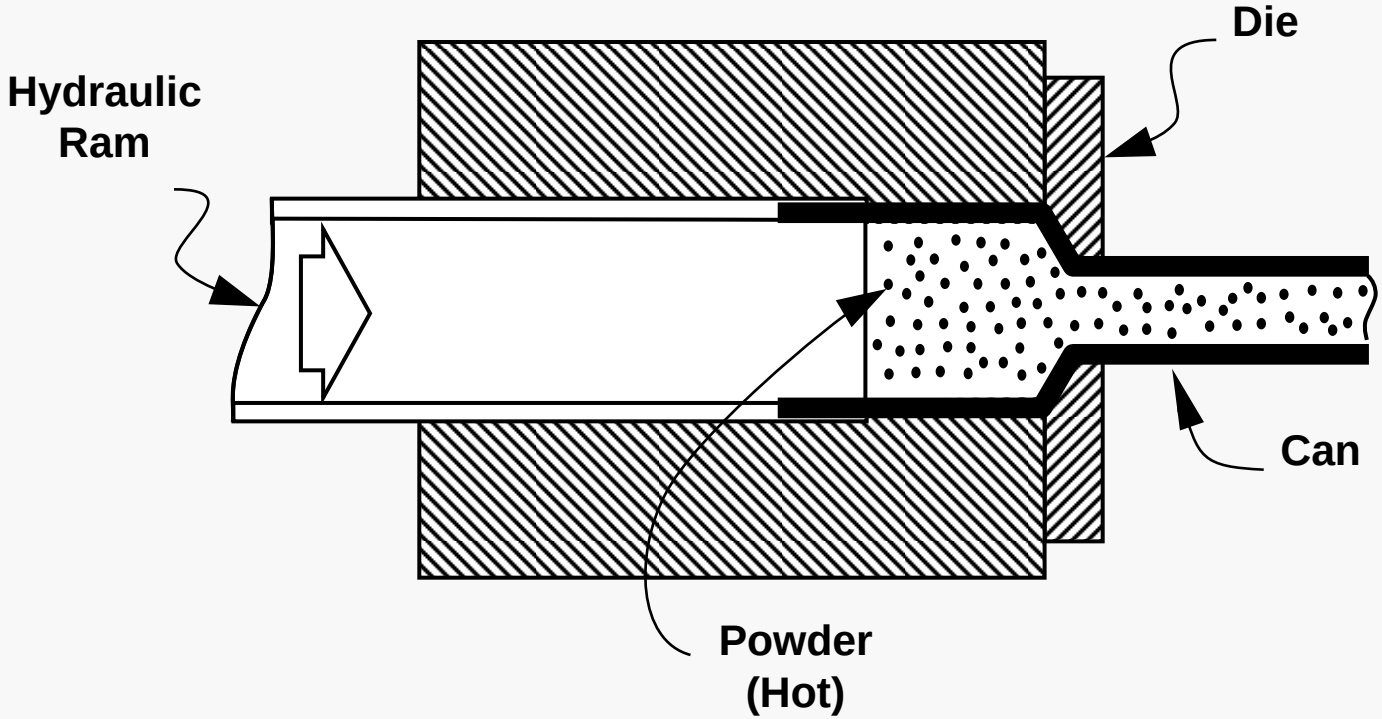

CES Steps 4 and 5: Machine Extrusions and Cask Assembly

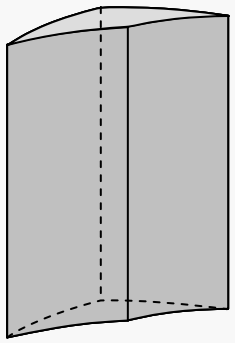

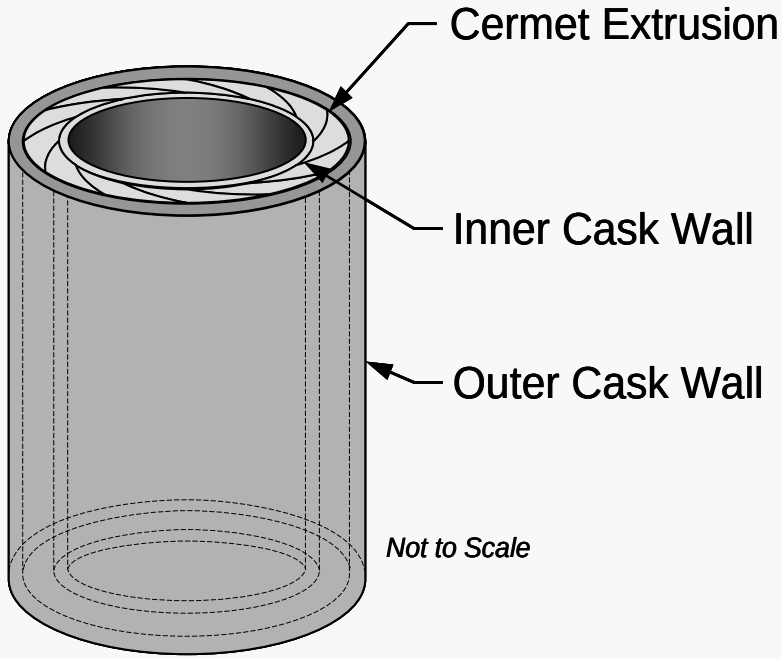

Machine Extrusions

Assemble Cask (Braze or Weld)

Cask Cost Estimates ($/Cask)

No. of Cermet Sections	12	24	36	48
Steel Components				
Powder	11,578	10,973	10,526	10,157
Steel Extrusion Cans	45,368	48,956	55,121	42,383
Cask Shells	16,050	16,050	16,050	16,050
Consumables	852	852	601	601
Extrusion				
Low Cost Estimate	202,500	270,000	270,000	240,000
High Cost Estimate	405,000	540,000	540,000	480,000
Machining/Assembly				
Low Cost Estimate	23,437	37,500	45,000	48,000
High Cost Estimate	46,875	75,000	90,000	96,000
Total Cost				
Low Cost Estimate	299,785	384,331	397,298	357,191
High Cost Estimate	525,722	691,830	712,298	645,190

Conclusions

- **Cermet SNF casks have superior performance relative to other casks**
- **If low-cost manufacturing methods are developed, cermet casks will be used for spent nuclear fuel**
  - **May contain DUO_2 for higher SNF capacity per cask for given weight or size limitations**
  - **Alternative cermets used to meet different requirements**
- **CES process appears practical**
  - **Uses existing technology**
  - **Relatively low capital cost investment**
  - **Limited handling of DUO_2**
- **Potentially competitive economics**
  - **Primary uncertainty is in extrusion costs**
  - **Extrusion test run with surrogates is required to reduce cost and performance uncertainties**