Semi-Therm 22 March 2006—Dallas, Texas

FUNDAMENTALS OF A FLOATING REFRIGERANT LOOP CONCEPT BASED ON R134A REFRIGERANT COOLING OF HIGH HEAT FLUX ELECTRONICS

C. W. Ayers, J. S. Hsu
Oak Ridge National Laboratory

K. T. Lowe
University of Tennessee

Prepared by Oak Ridge National Laboratory, managed by UT-Battelle, LLC, for the U.S. Dept. of Energy under contract DE-AC05-00OR22725. The submitted manuscript has been authored by a contractor of the U.S. Government under contract DE-AC05-00OR22725. Accordingly, the U.S. Government retains a nonexclusive, royalty-free license to publish or reproduce the published form of this contribution, or allow others to do so, for U.S. Government purposes.

OAK RIDGE NATIONAL LABORATORY
U. S. DEPARTMENT OF ENERGY

OUTLINE

1. **What is the ORNL *Floating Loop*?**
2. **How does it work?**
3. **Why use it?**
4. **HEV application examples**
5. **Prototype Testing**
6. **Conclusions**

WHAT IS THE ORNL FLOATING LOOP ?

Low pressure drop R134a refrigerant loop for direct-contact cooling of power electronics and motors.

Circulating loop that "FLOATS" across the condenser inlet/outlet.

Works in parallel with an existing (i.e. automobile) AC system.

Can function as a stand-alone low-pressure drop cooling loop.

Operates at condenser pressure and temperature.

Low input energy needed due to low pumping requirement.

HOW DOES THE FLOATING LOOP WORK?

Takes liquid refrigerant directly from the condenser (60-80°C).

Small pump circulates fluid to the electronics and motor loads.

Liquid cools the loads via evaporative cooling and direct contact.

Vapor is returned to the condenser.

Heat is rejected to ambient by condensing the vapor from the floating loop and the passenger A/C sub systems.

HOW DOES THE FLOATING LOOP WORK?

R134a Integrated Floating Loop
Cooling System Diagram

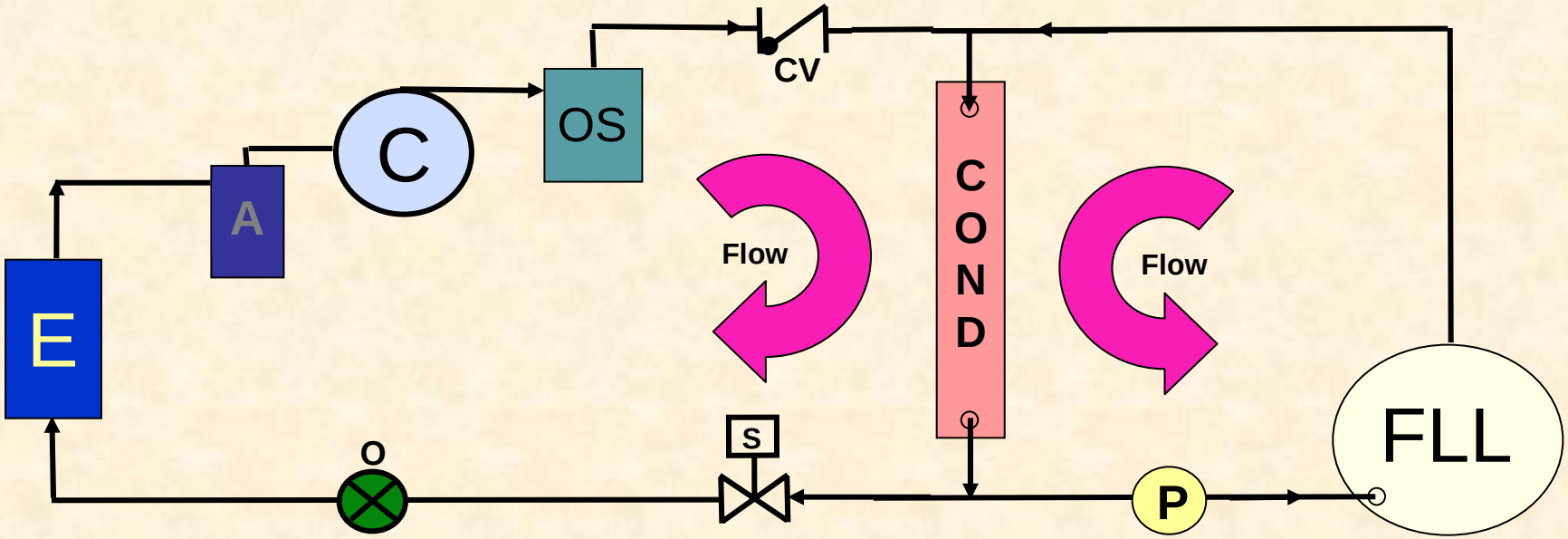

E - evaporator
A - accumulator
C - compressor
OS - oil separator

COND - condenser
S - solenoid shutoff valve
O - expansion orifice

FLL - floating loop load
CV - check valve
P - floating loop liquid pump

HOW DOES THE FLOATING LOOP WORK?

Coefficient of Performance Definition:

$$COP = \frac{\text{Heat Rejected}}{\text{Input Power}}$$

COP for Passenger A/C System ~ 3

→ high input power required due to high compressor pumping power.

COP for Floating Loop ~ 45

→ very low pumping power required to circulate required cooling fluid through loop.

HOW DOES THE FLOATING LOOP WORK?

R134a Integrated Floating Loop
Cooling System Diagram

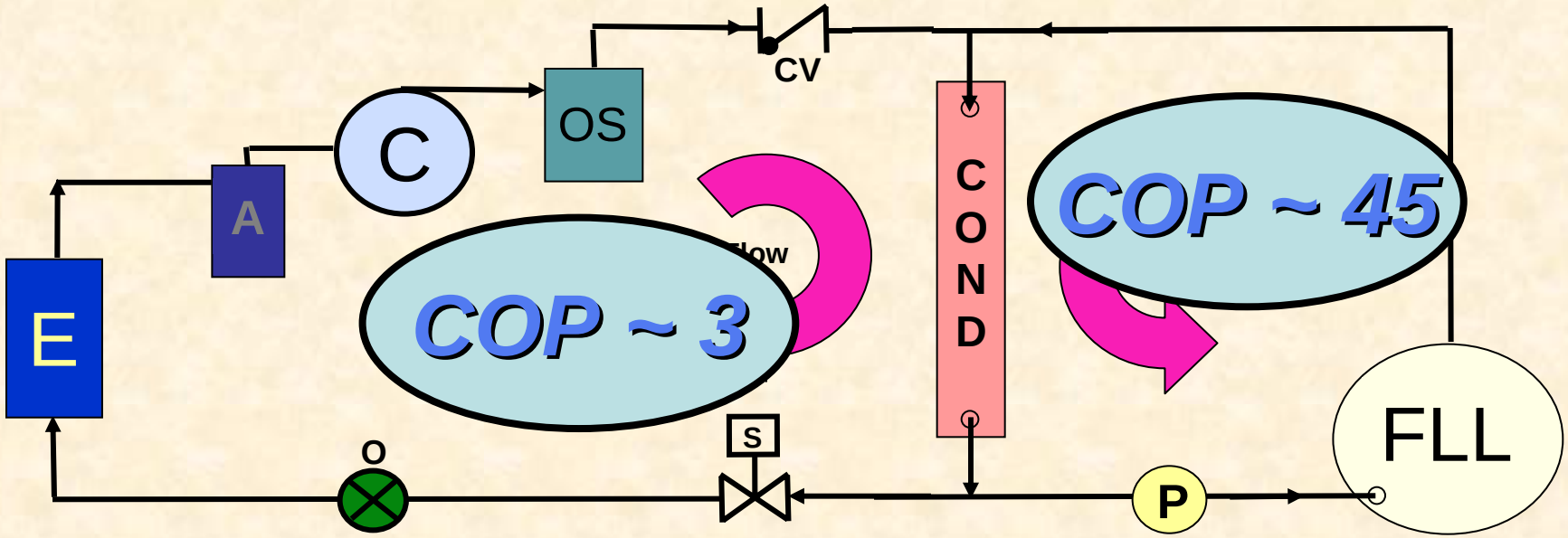

E - evaporator
A - accumulator
C - compressor
OS - oil separator

COND - condenser
S - solenoid shutoff valve
O - expansion orifice

FLL - floating loop load
CV - check valve
P - floating loop liquid pump

HOW DOES THE FLOATING LOOP WORK?

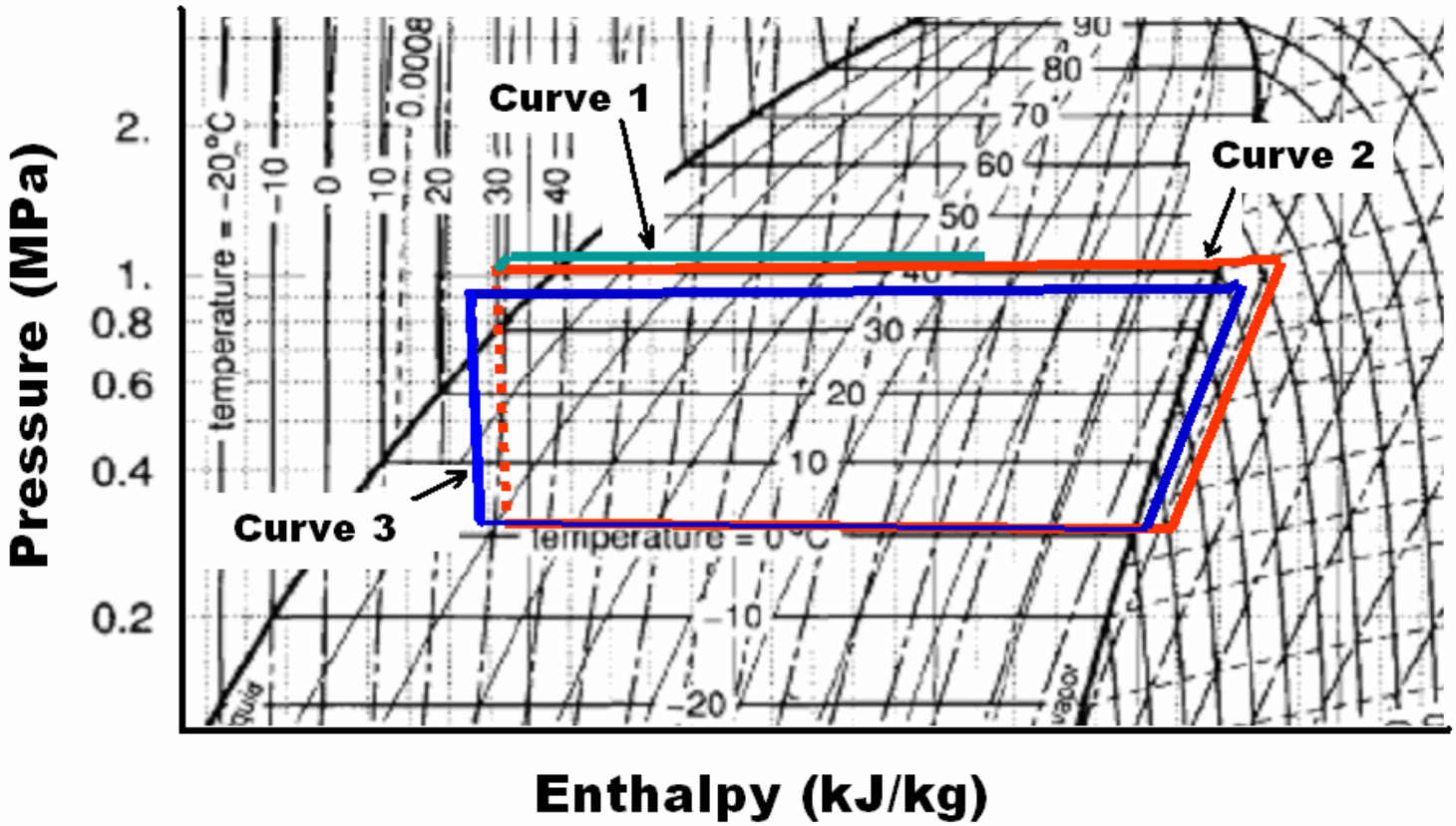

Pressure-Enthalpy relationship for an A/C system along with the ORNL floating loop operating characteristics.

WHY USE IT ?

Hybrid electric vehicles (HEVs) use power electronics and large motors for a traction drive
- *energy losses require additional cooling circuits*

Already multiple cooling systems on vehicles
- *need to minimize systems and components*

ORNL floating loop enables use of direct cooling
- *promotes higher power density in the traction drive*

WHY USE IT ?

Normal Refrigeration or A/C Systems:

→High pressure drop (high energy) to achieve low temperature

ORNL Floating Loop:

→Minimal pressure drop (low energy) where higher temperatures are allowable

WHY USE IT ?

KEY ENABLERS:

- R-134a is an existing common fluid with a very high dielectric strength and engineered cooling properties.
- Condenser temperature is in a good range for cooling electronics and motors.
- Provides two-phase *DIRECT-CONTACT* cooling.
- Low system input power required to remove large amounts of heat.

HEV APPLICATIONS

Some Applicable HEV Designs :

Assist-only electric motor (parallel configuration)

Full hybrid traction drive (series, parallel, and series-parallel configurations)

Fuel cell hybrids (series configuration)

→ For automobiles, SUVs, other vehicles

HEV Applications

Some Currently Used Cooling Methods:

Water/Ethylene Glycol with separate radiator circuit, both motors and power electronics (~65°C coolant).

Oil cooling for motors, discussions for inverters (~85°C nominal).

Direct air cooling, both motors and power electronics (~40°C ambient).

PROTOTYPE TESTING

Main Goals in this Development:

- Proof of concept accomplished with a laboratory prototype.
- Prototype will provide a test bed for multiple direct-cooling experiments for electronics and motors.

PROTOTYPE TESTING

Refrigerant Studies:

R134a and other candidate refrigerants have been tested for dielectric strength:

R134a Dielectric Strength:
> 275 kV/mm

(Other Fluids 150 – 275 kV/mm)

Life tests have been ongoing for ~2 years with a common gate drive card (conventional components and wiring) and a commercially packaged IGBT submerged in R134a.
→Functionality tests are done periodically.

Pressurized test chamber Containing electronics in R134a liquid.

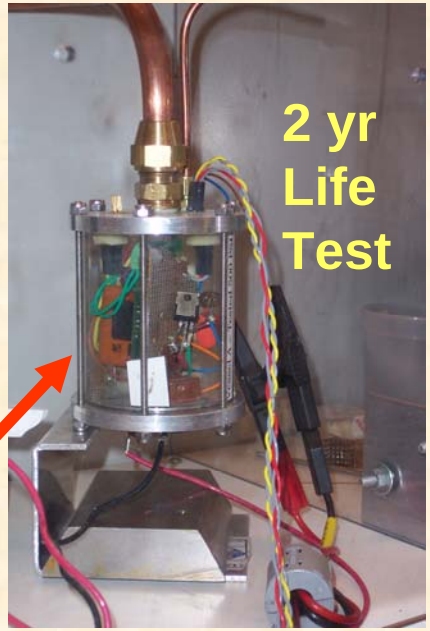

PROTOTYPE TESTING

Prototype design based on a 9 kW automotive A/C system, built into cabinet for laboratory testing and use:

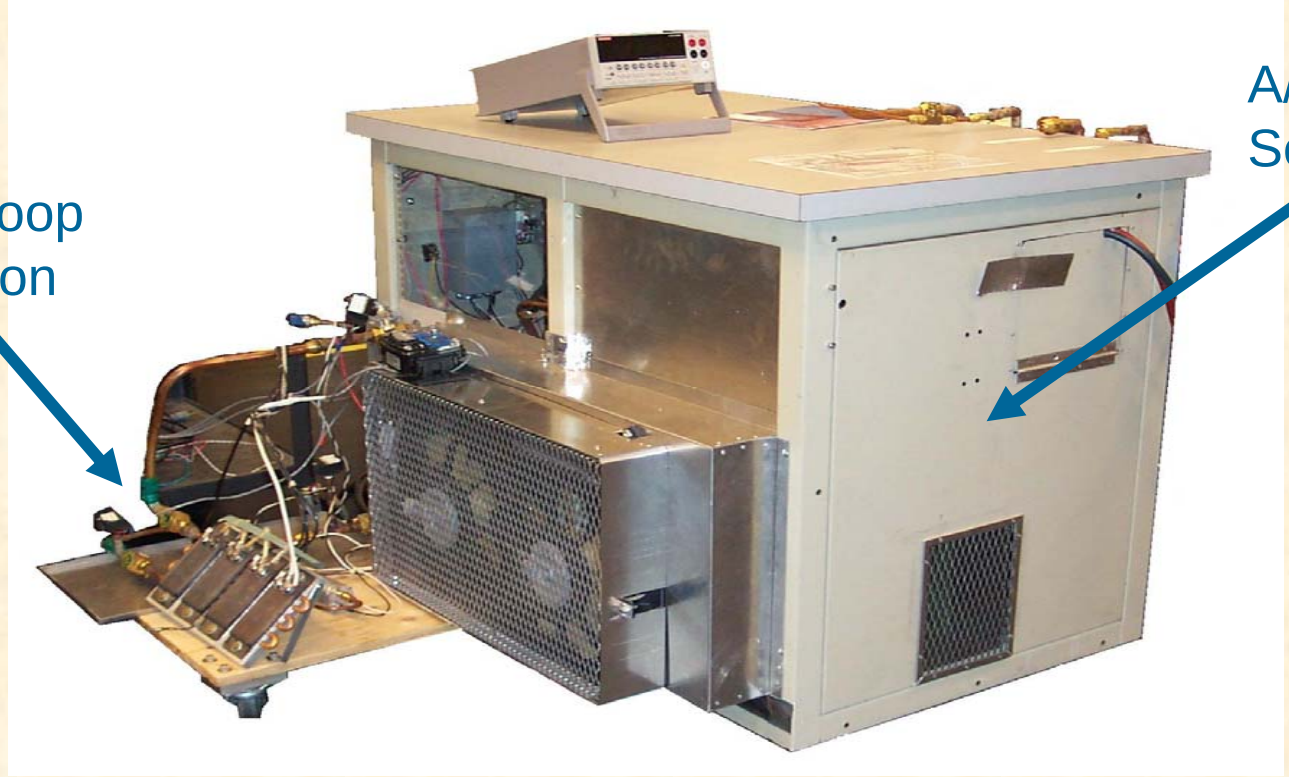

PROTOTYPE TESTING

Three main test scenarios were performed, with the system completed and subsections connected together:

a) Loop only operating

b) A/C system only operating

c) Both operating simultaneously

PROTOTYPE TESTING

This floating loop prototype tested up to about 2 kW, operating in conjunction with A/C system operation.

System dynamics and instabilities are being studied and resolved.

Oil and refrigerant traps (mostly an engineering issue) are being evaluated for possible fixes as testing continues

CONCLUSIONS

1. Basic floating loop concept has been successfully implemented and tested in a laboratory style system.
2. This system is being used for ongoing research investigating direct R134a cooling for electronics.
3. R134a and several other refrigerants studied show great promise as dielectric coolants.
4. System is scalable to larger automobile/SUV A/C systems.
5. Loop concept is not dependent on R134a only, but new A/C cooling fluids being investigated.