Overview of HFIR Core Design Bases Relevant to Possible Conversion to Low-Enriched Uranium

Trent Primm
Oak Ridge National Laboratory

Presented at the 2006 Reduced Enrichment for Research and Test Reactors (RERTR) Conference, Boston, Massachusetts

November 8, 2005

Presentation Outline

- **General overview of HFIR** **(portions impacted by LEU annotated)**
- **Fuel operating parameters**
- **SAR and TSR requirements relevant to ORNL proposal to RERTR**
- **Past fuel issues and current fabrication criteria**
- **Issues related to introducing a new fuel to HFIR**

General overview of HFIR: 7900 Area

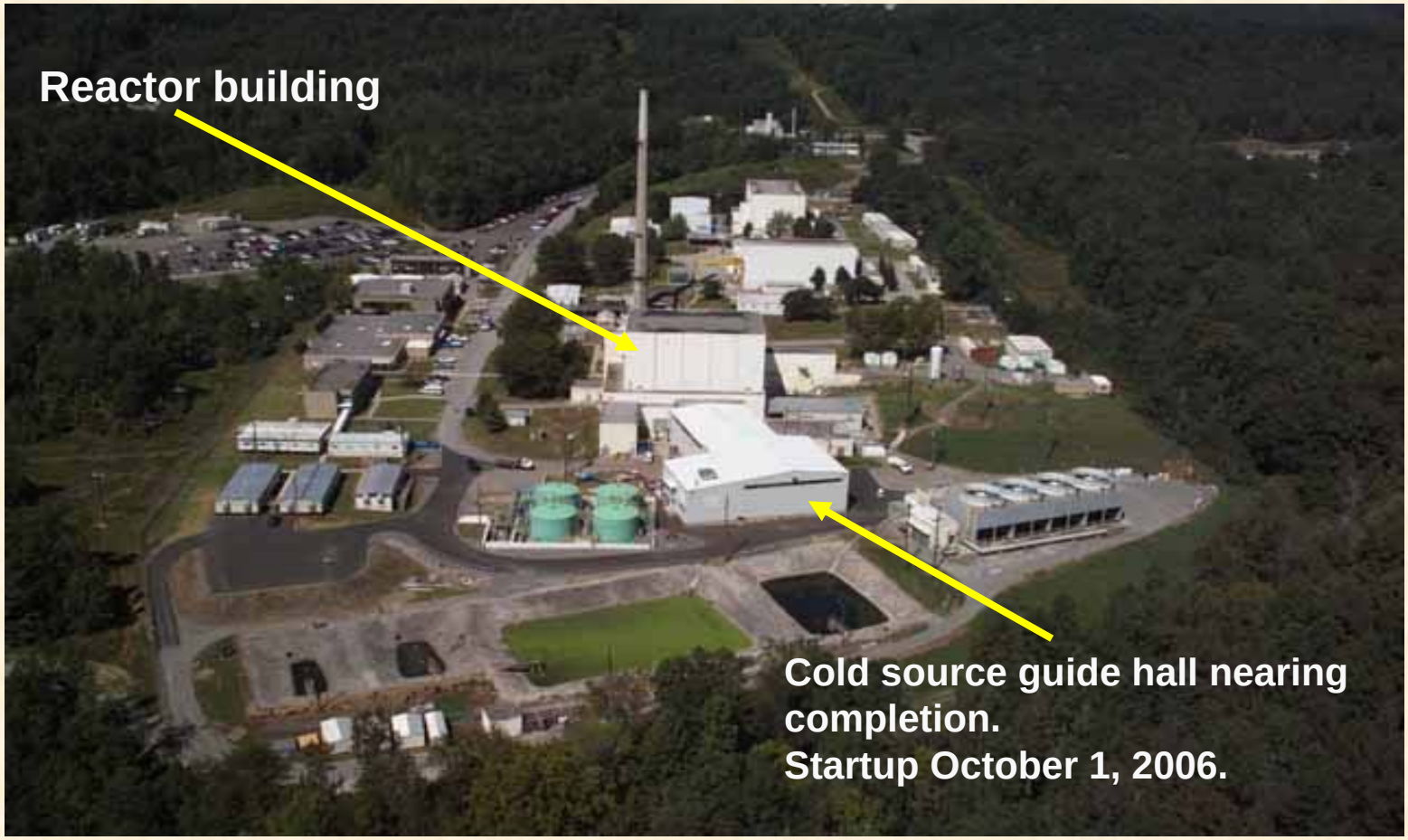

Functions of the HFIR

- **Isotope production (medical and industrial)**
- **Transplutonium isotope research and production**
- **Materials irradiation**
- **Neutron activation analyses**
- **Neutron scattering research**

HFIR and the Spallation Neutron Source form the Center for Neutron Science at ORNL, sponsored by the DOE Office of Science.

HFIR Was Designed to Produce

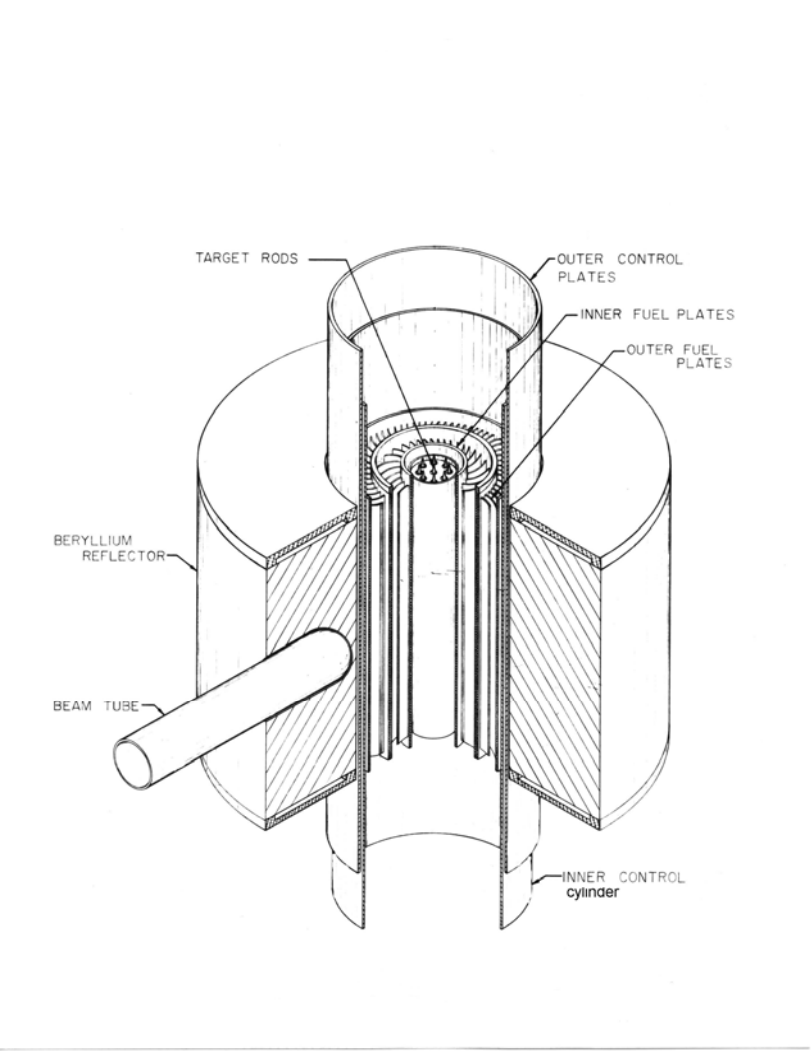

- **Beam intensities among world's highest**
- **World's highest thermal flux 3.0(10^{15} n/cm^2 • s)**
- **Compact core— high-power density**
- **Flux-trap design**
- **Concentric cylinders**
  - **Target**
  - **Fuel**
  - **Control**
  - **Reflector**

Top Side of Reactor and Beryllium Reflector

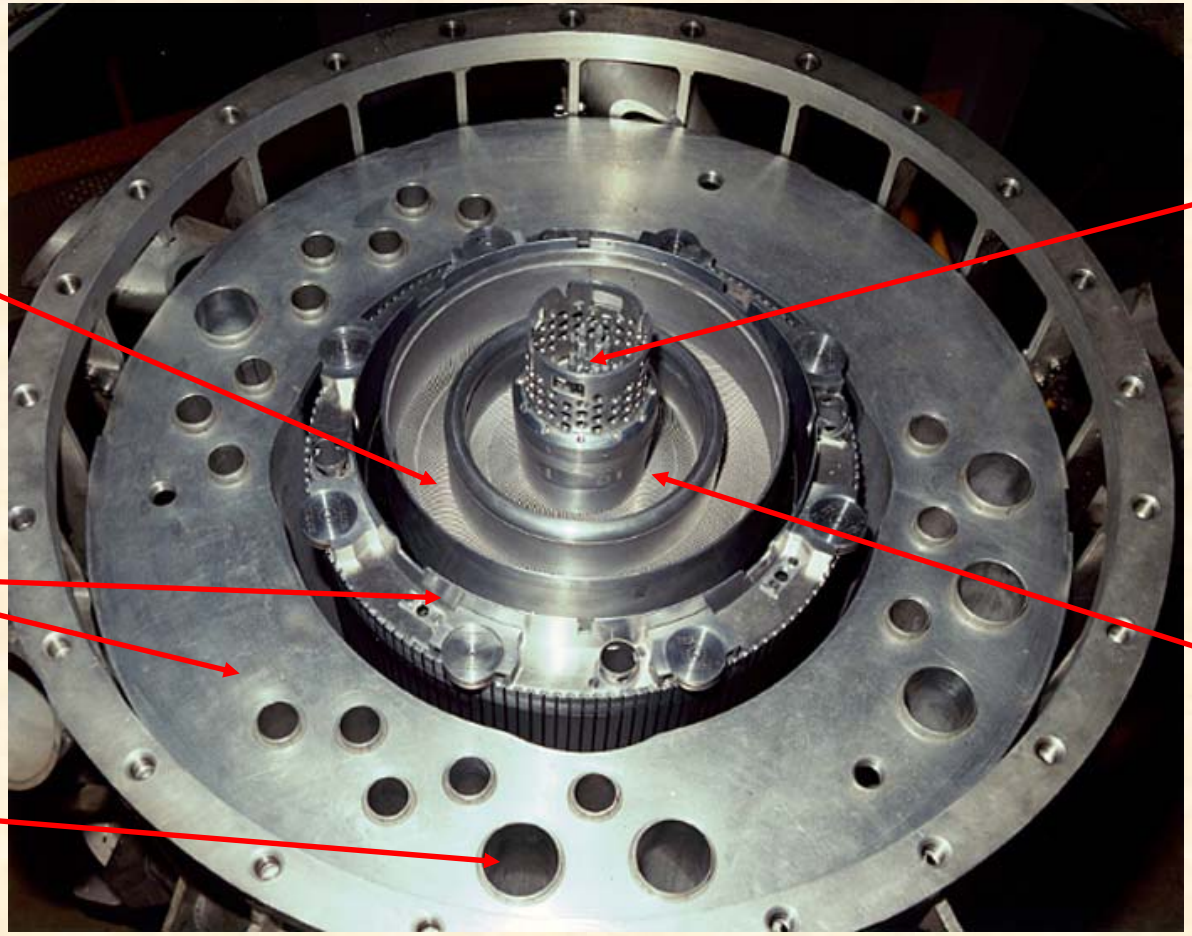

Note: changing any radial or axial dimension of the fuel element would require redesign of entire core. High fluxes achieved by compact volume. Therefore, no changes proposed in ORNL RERTR proposal.

Reactor Characteristics

- **Light water moderated and cooled**
- **Beryllium reflected**

  Inner diameter = 48 cm; Outer diameter = 109 cm; Height = 61 cm
- **Fuel: Al clad U_3O_8 plates inserted in Al annuli, HEU**

  9.4 Kg ^{235}U; I.D. ~13 cm; O.D. = 43.5 cm; active fuel length = 51 cm
- **Control with concentric cylinders of Eu_2O_3 external to fuel**
- **Pressure vessel - carbon steel with stainless steel; 2.4 m inside diameter, 7.3 cm thick**
- **Coolant flow: 1010 liters per second**
- **Inlet pressure: 3.2 MPa; temperature: 49º C**
- **Outlet pressure: 2.5 MPa: temperature: 69º C**
- **Fuel cycle: 26 days at 85 MW; refueling/maintenance outage 10 – 14 days; nominally 8 cycles per year**

Note: Except for HEU and amount of ^{235}U, none of these would change under the ORNL RERTR proposal.

HFIR Fuel Elements

- **Assembled elements subcritical in water**
- **Simplifies storage and transportation**
- **Highly desirable to maintain this characteristic for LEU**

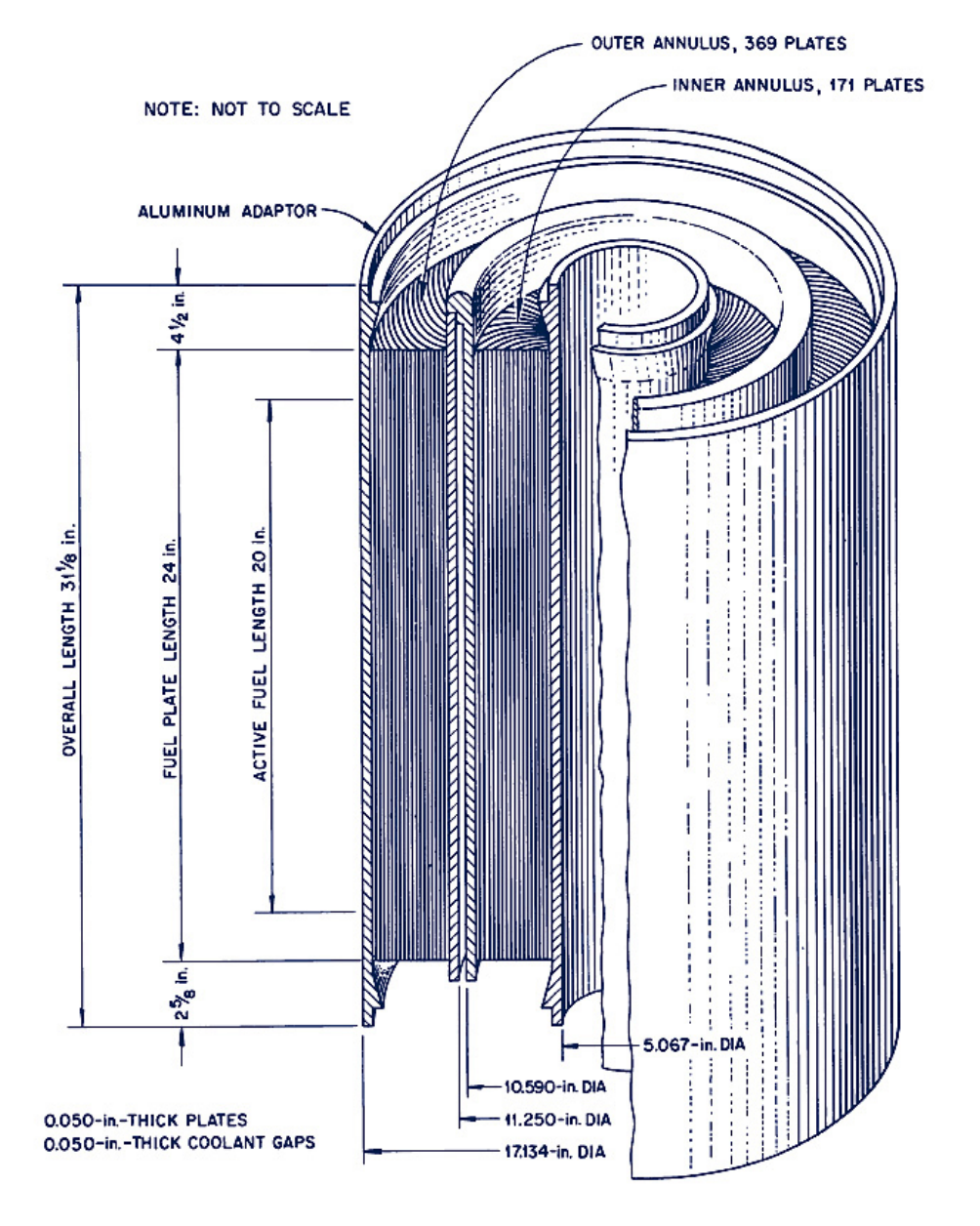

HFIR is a pressurized loop, light water reactor submerged in a pool.

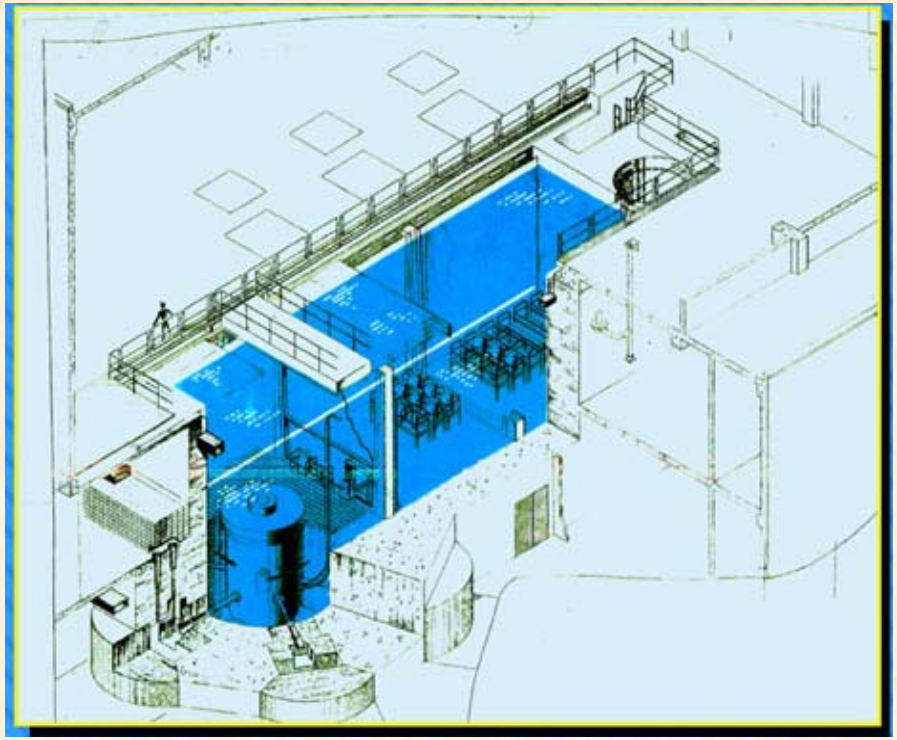

- **Reactor pool**
  - **5.5 m wide * 6.1 m length * 11 m depth**
- **Storage pool**
  - **5.5 m wide * 12.5 m length * 6.1 m depth**
- **All handling of irradiated components is done under water**

Handling tools designed specifically for HFIR element geometry and weight. LEU inner element weight would be at least 20% greater than HEU. Outer element 30%.

Transplutonium and some “industrial” isotope production occurs in rods placed in the central target.

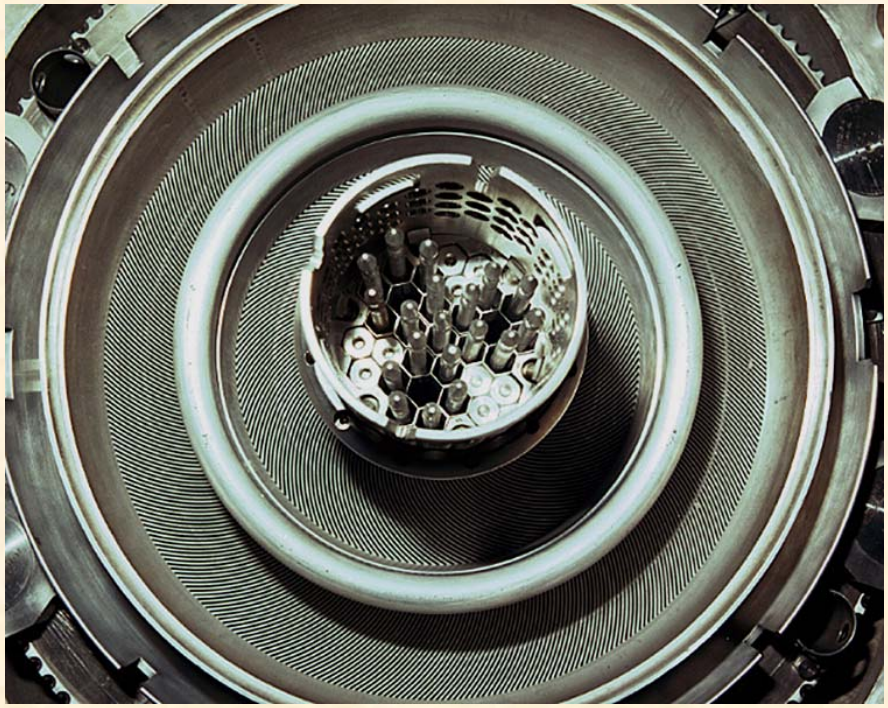

- **31 Sites in interior of basket; 3 now hydraulic rabbit tubes**
- **6 Sites on periphery of basket**
- **Fluxes (n/cm^2/s) at midplane**

Thermal	Fast
<0.4EV	>0.1MEV
2.50E+15	1.20E+15

- **During FY05, produced about various targets for NNSA in this region**

Transplutonium Isotope Production

- **HFIR was designed and built to produce research quantities of transplutonium isotopes**
  - **basic research on chemical and physical behavior**
  - **target material for synthesis of still heavier isotopes in accelerators**
- **HFIR is the western world's only supplier of transplutonium isotopes – ^{252}Cf, ^{253}Es, and ^{259}Bk**
- **^{252}Cf has many medical, defense, and industrial applications**
  - **treatment of cervical cancer**
  - **neutron radiography of aircrafts for Air Force**
  - **startup source in nuclear reactors**
- **Only small quantities of these isotopes are produced each year**

Hydraulic rabbit tubes are located in the target region.

Number increased from one to three in June 2005.

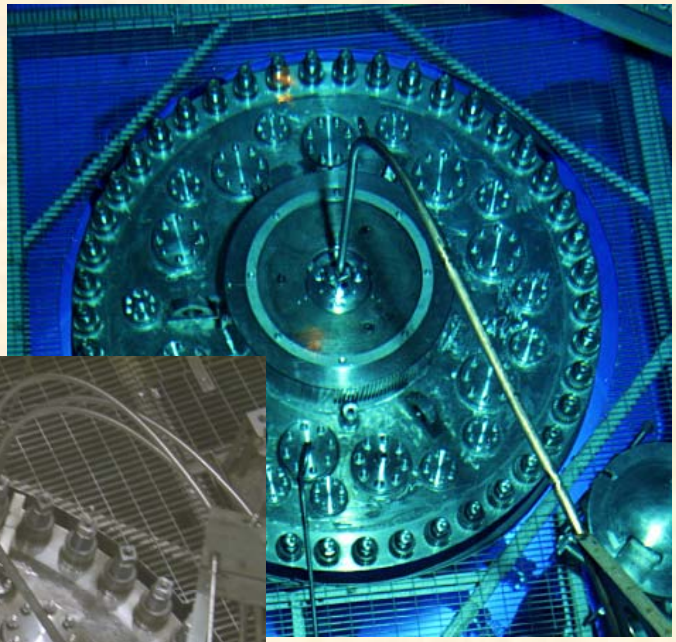

- **Allows access to the high flux region with the reactor operating**
- **Could be used for small sample U/Mo irradiations**
- **Can accommodate 9 targets of the dimension shown**
- **Significant commercial development completed with local company (Theragenics) to produce ^{103}Pd for prostate cancer treatment**

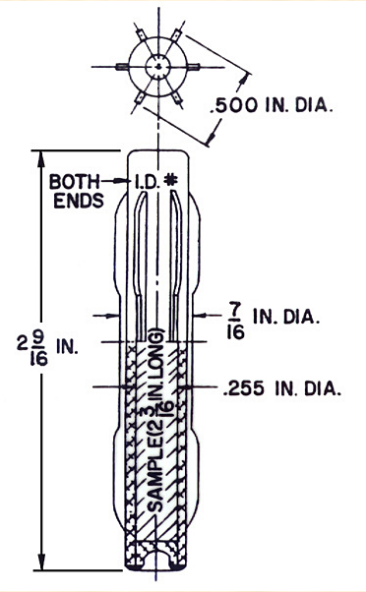

Experiment Facilities in the Removable Beryllium

- **8 Large RB facilities [thermal flux 1.2(10^{15}), fast 0.4(10^{15})]**
  - **4.6 cm outside diameter; 51 cm active length**
  - **Capable of accommodating instrumented experiments**
  - **Principal uses: isotope production, materials irradiation; could be used for U/Mo miniplates**
- **4 Small RB facilities**
  - **1.3 cm inside diameter**
  - **51 cm active length**
  - **Un-instrumented experiments only**
  - **Primary use isotope production**

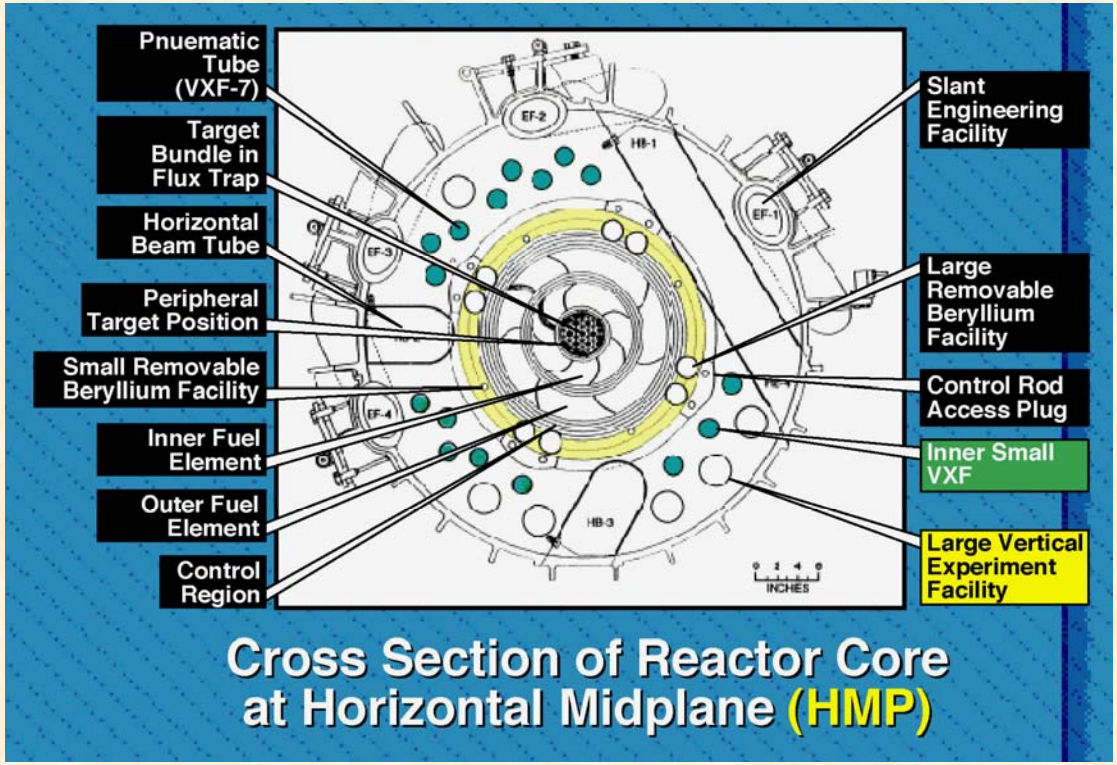

Experiment Facilities in the Permanent Beryllium

- **16 small vertical experiment (VXR) facilities [thermal flux 7.5(10^{14})]**
  - **4 cm inside diameter, 51 cm active length**
  - **11 sites at 39 cm radius designated Inner Small VXF**
  - **5 sites at 44.1 cm radius designated Outer Small VXF**
  - **Capable of performing instrumented irradiations**
  - **Principal uses:**
    - **Isotope production**
    - **Neutron activation analyses**
    - **Materials irradiation**
- **Six large vertical experiment facilities [thermal flux 4.0(10^{14})]**
  - **7.2 cm inside diameter, 51 cm active length**
  - **Capable of performing instrumented irradiations**
  - **Primary use has been for isotope production**

Neutron Activation Analyses Facilities

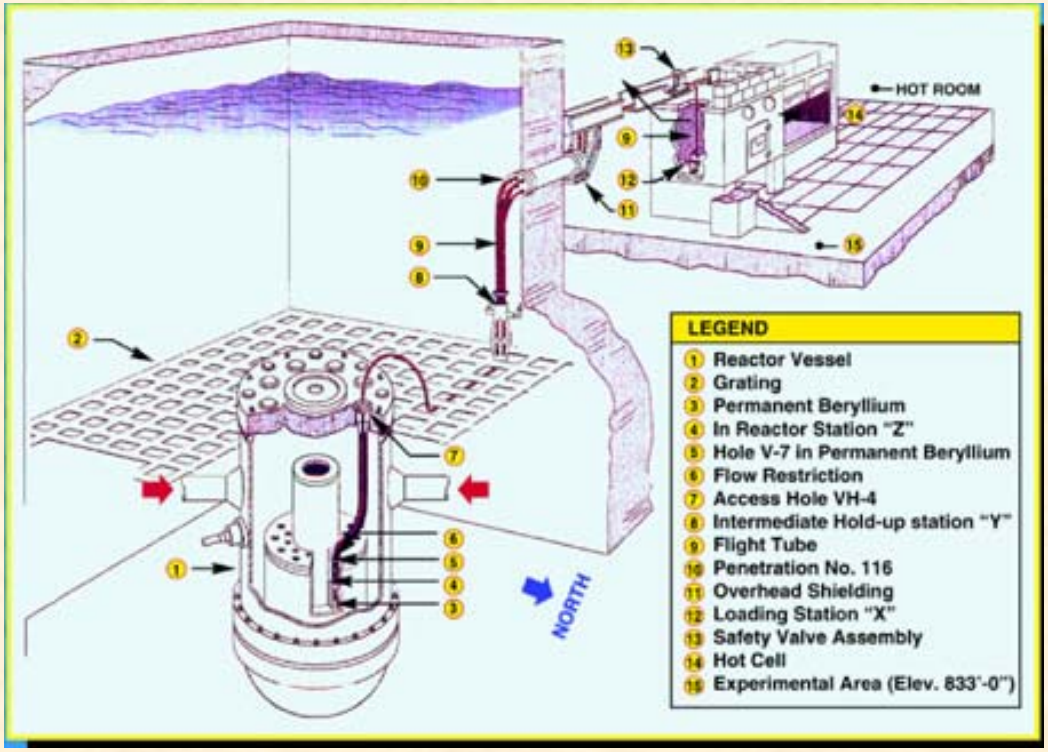

- **2 facilities located in Beryllium reflector**
  - **ISVXF – 7**
  - **Slant Engineering Facility (EF – 3)**
- **Pneumatic insertion of samples**
  - **~1 cc sample size**
- **Thermal neutron flux (n/cm^2-s)**
  - **ISVXF – 7: 4.0E14**
  - **EF – 3: 5.0E13**

The principal use for HFIR in the future – neutron scattering.

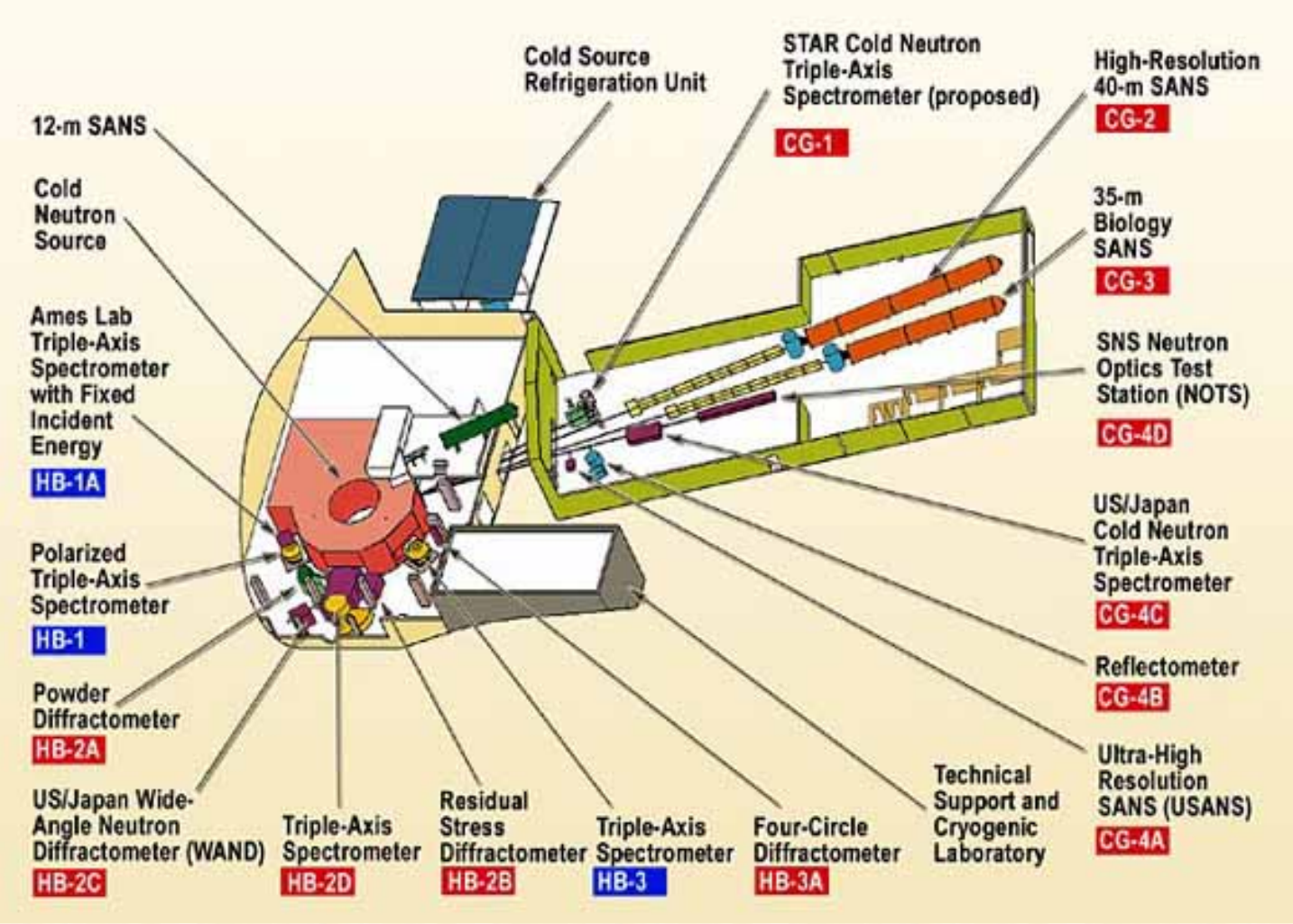

Presentation Outline

- General overview of HFIR
- Fuel operating parameters
- SAR and TSR requirements relevant to ORNL proposal to RERTR
- Past fuel issues and current fabrication criteria
- Issues related to introducing a new fuel to HFIR

171 Fuel Plates

369 Fuel Plates

Flux Trap Region

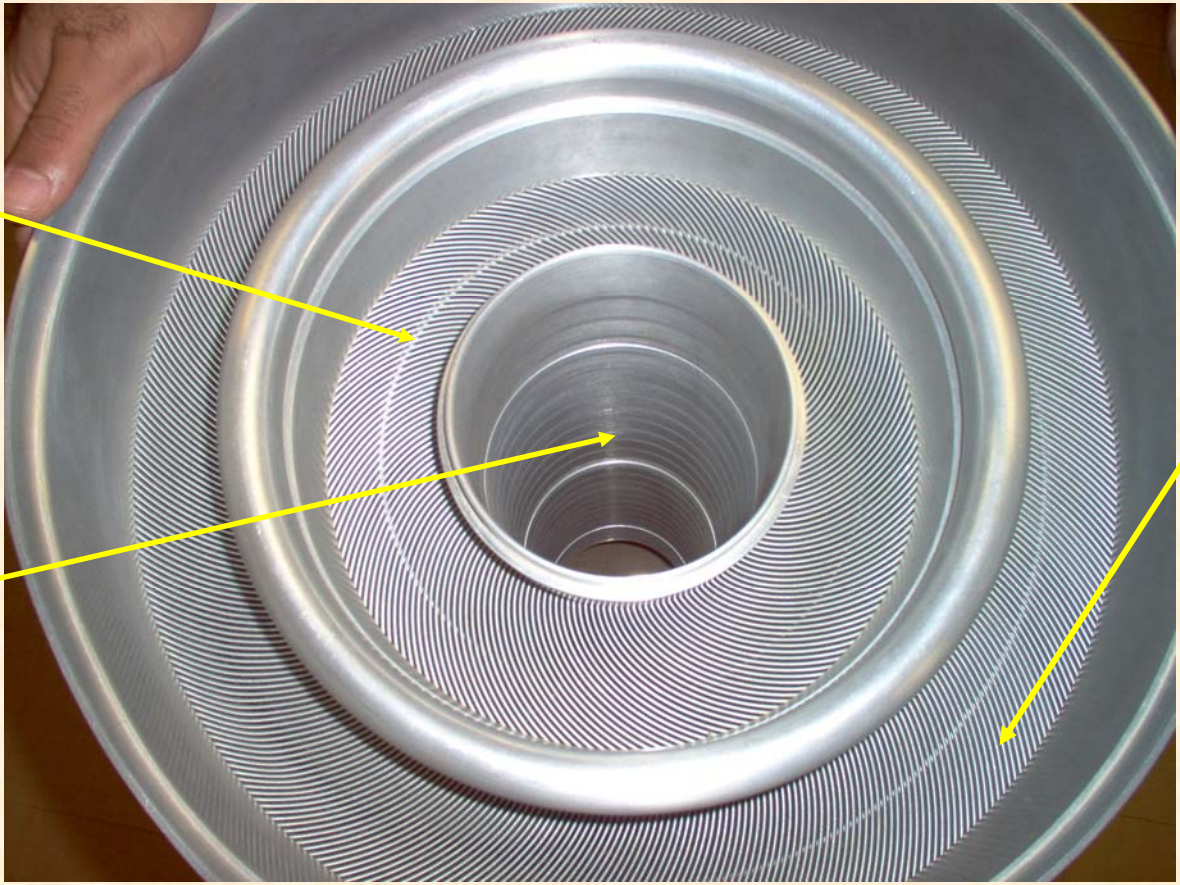

HFIR fuel elements – heat removal requires large surface area; high surface-to-volume ratio; fuel plates and coolant channels as thin as possible; not changed under ORNL RERTR proposal.

<u>Grading</u> – varying the relative thicknesses of the fuel and aluminum filler regions – <u>minimizes power peaking</u>.

3 grams of natural boron added to Al filler for inner element, also for smoothing power distribution.

Will have to determine new grading profile and boron loading for LEU (in ORNL proposal).

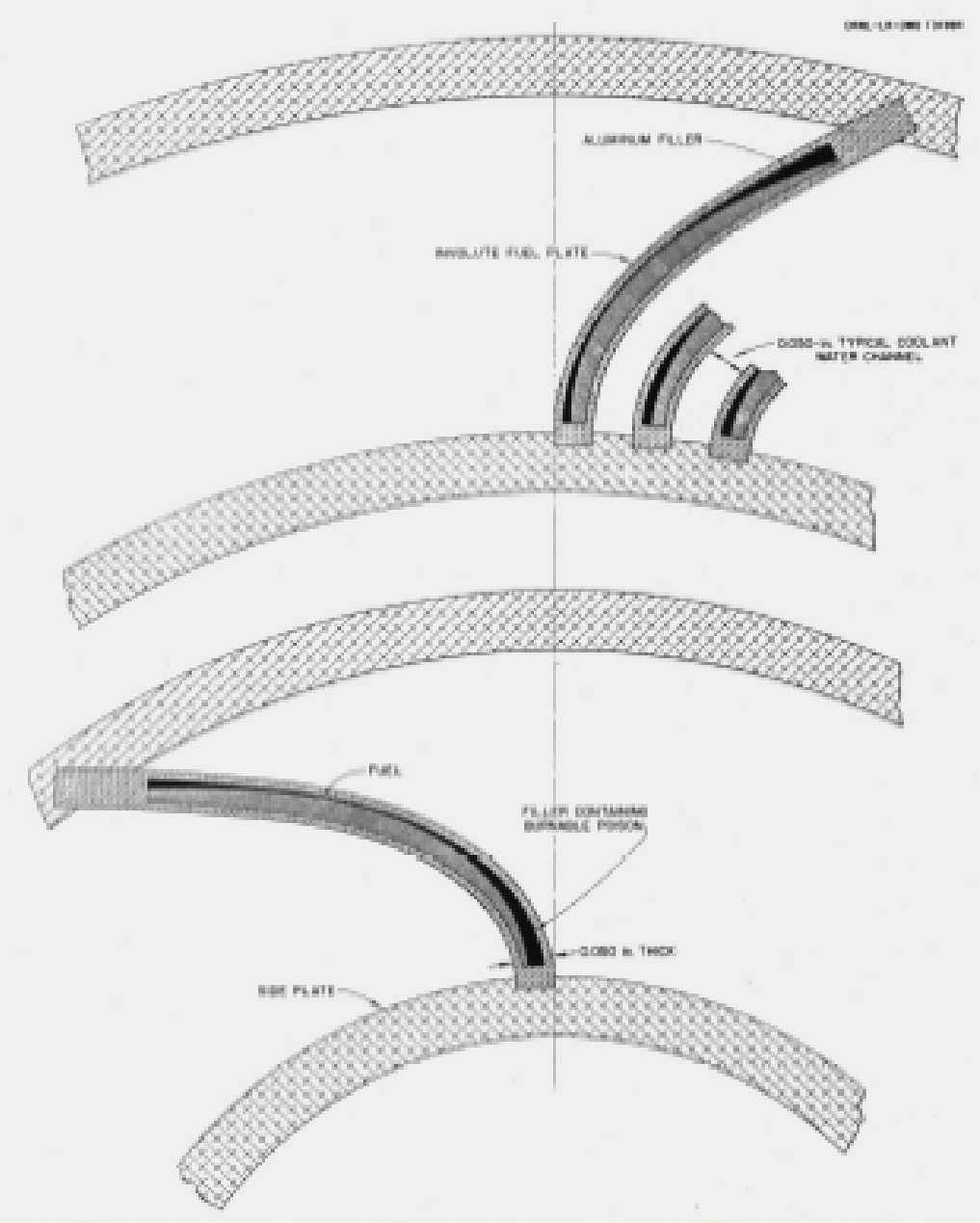

Fuel "meat" distributions impose limits on fabrication and fabrication process imposes limits on distributions.

angle of repose

Minimum meat region thickness

minimum filler region thickness

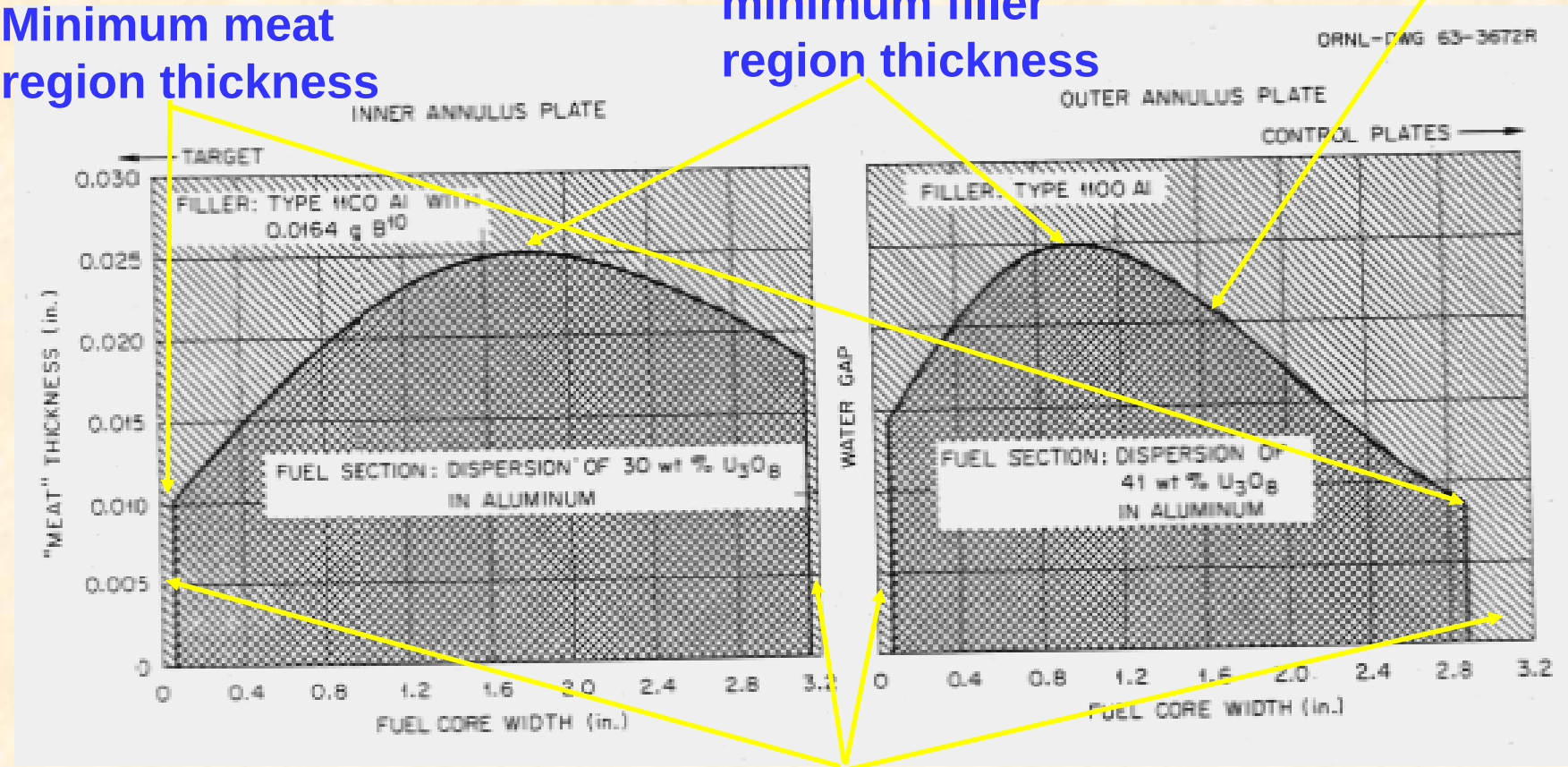

Contour deviation (12%)

edge (~50 mil) and end plate deviations

Spot (60 mil) fuel deviation (27%)

Fuel plate parameters

- 15.18 g ^{235}U +/- 1% in inner plate
- 18.44 g ^{235}U +/- 1% in outer plate
- Total loading of ^{235}U in core – 9.4 kg
- Total boron loading (inner element) – 2.8 g

- Fuel heat plate load – 97.5% of reactor power
- Average power density in core – 1.93 MW/L
- Average heat flux – 245 W/cm^2 [7.76(10^5) BTU/(hr*ft^2)]
- Heat flux at hot spot – 621 W/cm^2 [19.7(10^5) BTU/(hr*ft^2)]
- Coolant velocity – 15.5 m/s (51 ft/s)
- Coolant temperatures (inlet, outlet) – 49°C, 91°C (120°F, 196°F)
- Fuel plate centerline temperature – 163°C (325°F)

Presentation Outline

- General overview of HFIR
- Fuel operating parameters
- SAR and TSR requirements relevant to ORNL proposal to RERTR
- Past fuel issues and current fabrication criteria
- Issues related to introducing a new fuel to HFIR

Chapter 4.0 - Reactor

- **Summary description, fuel system design, nuclear design, thermal and hydraulic design, reactor materials, fundamental design of reactor control system**
- **Physics analyses performed with various, publicly available methods (current models will be modified for LEU per assumptions document)**
- **Thermal and hydraulic design performed with HFIR Steady State Heat Transfer Code (fabrication uncertainties/tolerances are input along with computational uncertainties; estimates margin to incipient boiling; basis for establishing operating power; modified for LEU per assumptions document, iterative process with materials program)**

Ch. 6 – Fission product removal and control systems
Ch. 11 – Radioactive waste management – source terms
Ch. 12 – Off site dose consequence

- **Different nuclide distribution among fission products due to significant plutonium fission in fuel cycle**
- **Leads to different accident source term**
- **Not expected to impact conclusions of analyses in SAR**
- **Not addressed in current proposal**

HFIR SAR - Chapter 15, Accident Analyses

- **Section 15.0 - Historical Background**
  - **History of HFIR Accident Analysis – no change**
- **Section 15.1 - Methodology**
  - **Codes and Use – no change to methodology (RELAP/ATHENA), input appropriate for LEU fuel (assumptions document)**
- **Section 15.2 - Transient and Accident Classification**
  - **What Accidents/How Probable – no change to list of accidents, probabilities may change; will need iteration with materials task; initial assumptions in document**
- **Section 15.3 - Transient and Accident Analysis**
  - **Accident Sequences – differential control element worth will lead to changes in accident sequences**
- **Section 15.4 - Conclusion**
  - **Summary of Accident Consequences - change**

HFIR SAR - Section 15.3 Accident Analysis

- **The transient and accident analyses considered events in the following categories;**
  - **increase in secondary heat removal,**
  - **decrease in secondary heat removal,**
  - **decrease in reactor coolant system flow rate,**
  - **reactivity and power distribution anomalies,**
  - **increase in reactor primary coolant inventory (over-pressurization),**
  - **decrease in reactor primary coolant inventory, and**
  - **radioactive releases from a subsystem or component.**

HFIR SAR - Section 15.3 Accident Analysis ...

- **Events were grouped into one of three frequency classes based upon the probability of occurrence of the initiating event and probability of the assumed equipment failures.**
  - **moderate (overall frequency greater than 10^{-1}/year)**
  - **infrequent (overall frequency less than 10^{-1}/year and greater than 10^{-4}/year)**
  - **limiting (overall frequency less than 10^{-4}/year and greater than 10^{-6}/year)**

HFIR SAR - Section 15.3 Accident Analysis ...

- **Events with an overall frequency less than 10^{-6}/year were not analyzed (with a few exceptions) as they were considered to be beyond the design basis of the facility.**
- **The event sequence with the largest radiological release or the greatest challenge to the core thermal limits in each of the 21 combinations of initiator category and frequency class is reported in detail in Section 15.3.**
- **With the assumptions that power, geometry, and flow rate are all unchanged from current values; most of the transient analyses are unchanged. Only reactivity excursions present the possibility of change.**

Section 15.3.4 - Reactivity Transients ...

- **Recently changed HFIR control element design to include less tantalum**
- **Neutron absorber content reduced therefore worth reduced**
- **No new transient analyses performed; only physics (Ch.4) analyses**
- **NOT an un-reviewed safety question (USQD performed)**
- **Reason – SAR based on conservative assumption of reactivity worth of control elements; though actual worth slightly reduced, still far greater than assumption in SAR**
- **Possible that similar situation will exist for LEU; part of ORNL proposal**

Section 16 – Technical Safety Requirements

- **No changes expected**
- **Design new fuel to current TSRs**

Presentation Outline

- General overview of HFIR
- Fuel operating parameters
- SAR and TSR requirements relevant to ORNL proposal to RERTR
- Past fuel issues and current fabrication criteria
- Issues related to introducing a new fuel to HFIR

During 40 years of operation, there have been no fuel element failures

- **No vibration problems**
- **No erosion/corrosion problems**
- **406 cores (assemblies)**
- **219,000 fuel plates**
- **About 10-15% of fuel plates submitted for waiver (out-of-specification)**
- **1-3% of fuel plates are rejected at the fabricator**
- **In recent history, a batch of ~200 plates was rejected.**
- **Three finished elements are currently under evaluation for acceptance.**

Fuel "meat" distributions impose limits on fabrication and fabrication process imposes limits on distributions.

angle of repose

Minimum meat region thickness

minimum filler region thickness

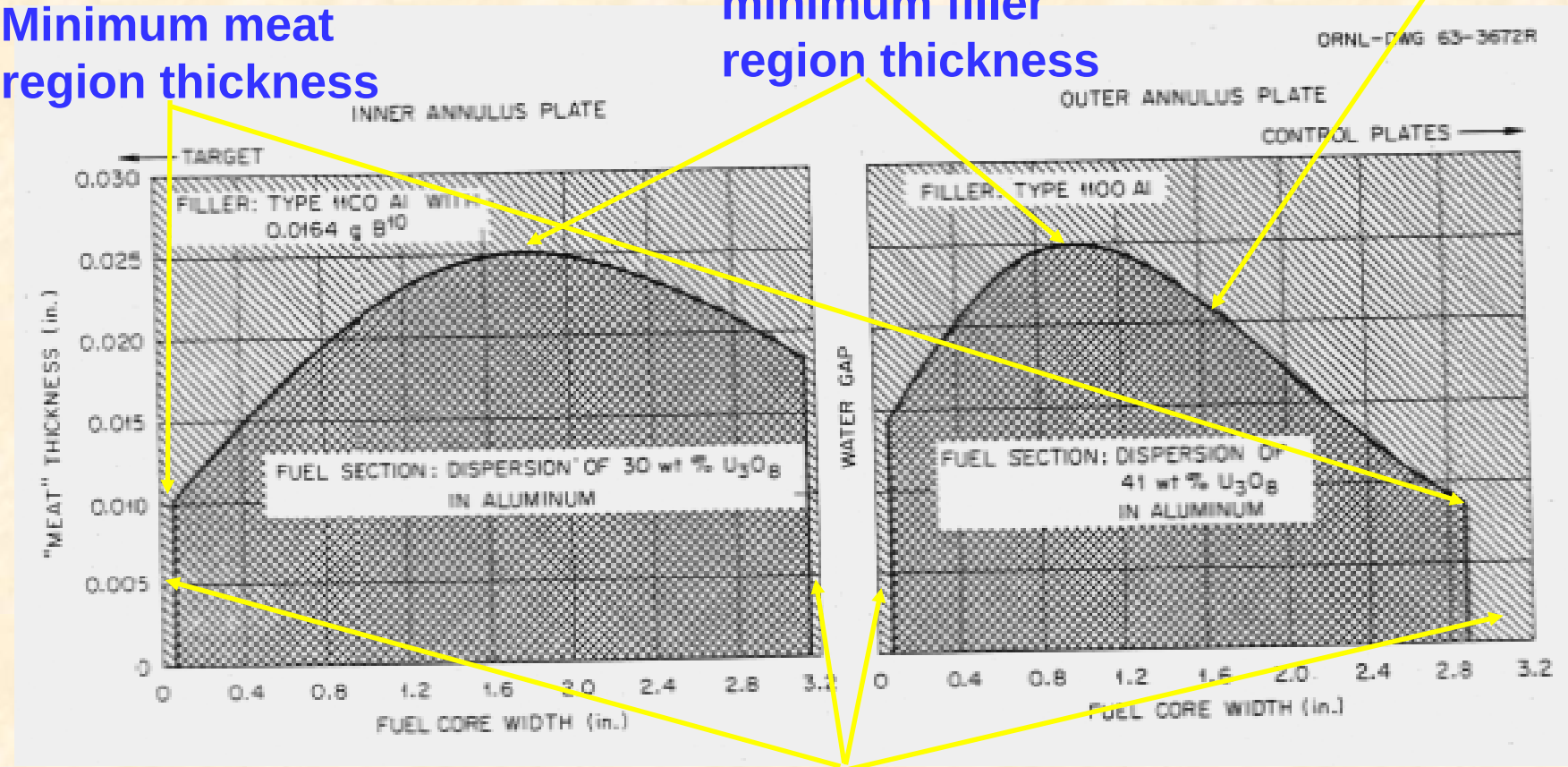

Contour deviation (12%)

edge (~50 mil) and end plate deviations

Spot (60 mil) fuel deviation (27%)

The HFIR fuel specification is part of the contract between UT-Battelle and BWXT

- **Minor parts are in a constant state of revision**
- **Experience a key component in production**
- **Craftsmanship**
- **Similar would be developed for U/Mo; materials task**

4. U_3O_8 POWDER SPECIFICATIONS

4.1 GENERAL REQUIREMENTS
4.2 ENRICHED URANIUM
4.3 CHEMICAL REQUIREMENTS
4.3.1 CHEMICAL AND TRACE ELEMENTS REQUIREMENTS
4.3.2 HEALTH PHYSICS REQUIREMENTS
4.4 PHYSICAL REQUIREMENTS
4.4.1 PARTICLE SIZE
4.4.2 SURFACE AREA
4.4.3 PARTICLE DENSITY
4.4.4 PARTICLE STRENGTH
4.4.5 PARTICLE SHAPE AND MICROSTRUCTURE
4.5 PROCESS REQUIREMENTS

5. TEST AND INSPECTION

5.1 SAMPLING
5.2 URANIUM ISOTOPIC CONTENT
5.3 CHEMICAL COMPOSITION
5.3.1 CHEMICAL AND TRANCE ELEMENT REQUIREMENTS
5.3.2 HEALTH PHYSICS REQUIREMENTS
5.4 PHYSICAL PROPERTIES
5.5 PROCESS REQUIREMENTS

6. SHIPPING REQUIREMENTS

6.1 SHIPPING ADDRESS
6.2 PACKAGING REQUIREMENTS
6.3 MARKING REQUIREMENTS
6.4 RADIATION LEVELS FOR SHIPPING
6.5 PACKING SLIP DOCUMENT

Portion of table of contents
From HFIR U_3O_8 Specification

HFIR BWXT-Lynchburg Fuel Plate Specifications

5.0 MATERIALS
- 5.1 Safety-Related Components
- 5.2 Process Materials
- 5.3 Aluminum Plate and Sheet
- 5.4 Aluminum Tubing
- 5.5 Aluminum Weld Wire
- 5.6 Aluminum Powder
- 5.7 Enriched Uranium
- 5.8 Uranium Oxide Powder
- 5.9 Boron Carbide Powder

6.0 FUEL PLATES REQUIREMENTS
- 6.1 General
- 6.2 Fuel Loading and Distribution
- 6.3 Poison Loading and Distribution
- 6.4 Fuel Compacts
- 6.5 Fuel Plate Pack Assembly
- 6.6 Fuel Plate Forming
- 6.7 Process
  - 6.7.1 Compacts
  - 6.7.2 Pack Assembly
  - 6.7.3 Roll Bonding
  - 6.7.4 Flat Fuel Plate
  - 6.7.5 Formed Fuel Plates

7.0 FUEL ELEMENT REQUIREMENTS
- 7.1 General
- 7.2 Side Plates
- 7.3 Insertion of Fuel Plates
- 7.4 Welding
  - 7.4.1 Welding Test Samples
  - 7.4.2 Welding of Fuel Elements
  - 7.4.3 Welding of End Fittings
- 7.5 Channel Spacing
- 7.6 Element Identification

8.0 TEST AND INSPECTION
- 8.1 General
- 8.2 Fuel Plates
  - 8.2.1 Fuel Loading
  - 8.2.2 Fuel Core Configuration
  - 8.2.3 Fuel Distribution
  - 8.2.4 Fuel Homogeneity
  - 8.2.5 Boron Distribution
  - 8.2.6 Nonbond
  - 8.2.7 Clad Thickness and Bonding
  - 8.2.8 Radioactive Surface Contamination
- 8.3 Fuel Element Assembly
  - 8.3.1 Uranium Loading
  - 8.3.2 Boron Loading
  - 8.3.3 Coolant Channel Spacing
  - 8.3.4 Welding

9.0 QUALITY ASSURANCE AND DOCUMENTATION
- 9.1 Quality Assurance Plan
- 9.2 Process Control
- 9.3 Procedures
- 9.4 Requalification
- 9.5 Personnel Qualification
  - 9.5.1 Powder Compacting
  - 9.5.2 Welding
  - 9.5.3 Radiography
- 9.6 Supplier Deviation and Nonconformance
- 9.7 Audits and Surveillance
  - 9.7.1 Audits and Source Inspection
  - 9.7.2 Surveillance
- 9.8 Preproduction Qualification
  - 9.8.1 Fuel Plate Qualification
  - 9.8.2 Fuel Elements

10.0 CLEANLINESS
- 10.1 General
- 10.2 Fuel Plates
- 10.3 Fuel Elements

Similar would be developed for U/Mo; materials task

Presentation Outline

- General overview of HFIR
- Fuel operating parameters
- SAR and TSR requirements relevant to ORNL proposal to RERTR
- Past fuel issues and current fabrication criteria
- Issues related to introducing a new fuel to HFIR

HFIR fuel elements are essentially unchanged since the first approach to critical – but there is a basis for change.

- **A central support to maintain the spacing of the involute plates was removed very early in the history of HFIR.**
- **Quality assurance testing equipment at BWXT has changed in recent history.**
- **NIST reactor has upgraded the fuel loading of their elements three times since startup.**
- **The original HFIR critical experiment element with 8 removable fuel plates is still in storage at Y-12. The final certification of the current fuel design was done in the reactor.**

Issues to introducing a new fuel (at reactor)

- **Studies of new fuels are not currently identified by the DOE Office of Science as being a budgeted item for Research Reactors Division**
- **Must show that reactor performance is not degraded by new fuel**
- **New fuel must be certified by DOE**
- **At-reactor technical issues addressed as a part of updating the Safety Analysis Report (already discussed)**
- **Significantly increased plutonium content of spent reactor fuel – "regulatory" consequences unknown**

Issues to introducing a new fuel (away from reactor)

- **HFIR pays cost of U_3O_8 production at Y-12 but no charge for HEU; how will LEU be produced? Downblended? Newly enriched? Does HFIR pay that cost?**
- **From previous slide, "certified fuel" implies that production processes at Y-12 and BWXT-Lynchburg are certified. New equipment? New procedures?**
- **Criticality safety for transportation and storage; fresh fuel reactivity of LEU may be less than HEU; plutonium is bred; analyses, benchmarking required**
- **Waste – acceptability of U/Moly**
- **HFIR/RRD financial responsibility extends beyond the 7900 site**