– ABSTRACT –

Manufacturing and Economic Studies for DUO_2-Steel Cermet Spent Fuel Casks

Charles W. Forsberg
Oak Ridge National Laboratory*
P.O. Box 2008; Oak Ridge, Tennessee 37831-6165
Tel: (865) 574-6783; E-mail: forsbergcw@ornl.gov

Terry N. Tiegs
Oak Ridge National Laboratory
P.O. Box 2008; Oak Ridge, Tennessee, USA 37831-6087
Tel: (865) 574-5173 E-mail: tiegstn@ornl.gov

Vinod Sikka
Oak Ridge National Laboratory
P.O. Box 2008; Oak Ridge, Tennessee 37831-6083
Tel: (865) 574-5112; E-mail: sikkavk@ornl.gov

Manuscript Date: October 14, 2005
File Name: HLW05.CermetEconAbstract
Subject Category: 2.3 Waste Handling, Storage, and Emplacement
Abstract Limits: 1290 Words (1500 Max); 3 Figures (3 Max)

Abstract Author Notification: December 1, 2005
Draft Paper: January 12, 2006; Author Notification: February 23, 2006
Final Paper Submittal: March 17, 2005

Abstract Prepared for
2006 International High-Level Radioactive Waste Management Conference
American Nuclear Society
Las Vegas, Nevada
April 30–May 4, 2006

The submitted manuscript has been authored by a contractor of the U.S. Government under contract DE-AC05-00OR22725. Accordingly, the U.S. Government retains a nonexclusive, royalty-free license to publish or reproduce the published form of this contribution, or allow others to do so, for U.S. Government purposes.

*Oak Ridge National Laboratory, managed by UT-Battelle, LLC, for the U.S. Department of Energy under contract DE-AC05-00OR22725.

Manufacturing and Economic Studies for DUO_2-Steel Cermet Spent Fuel Casks

C. W. Forsberg, T. N. Tiegs, and V. Sikka

Introduction

Two new powder-metallurgy methods are being investigated to manufacture cermet casks (Fig. 1) to be used [1] for storage, transport, or disposal of spent nuclear fuel (SNF). The use of cermets, which consist of ceramic particles embedded in contiguous steel, is a method to incorporate brittle ceramics [depleted uranium dioxide (DUO_2); aluminium oxide (Al_2O_3); etc.] with highly desirable properties into a strong ductile metal matrix with a high thermal conductivity, thus combining the best properties of both materials. While the outstanding performance follows from these material characteristics, there is a practical question as to whether such casks can be economically manufactured. A series of manufacturing and costing studies have been completed and are herein described. New fabrication methods provide potentially economic methods for cermet cask fabrication. For many scenarios, cermets are attractive materials for casks.

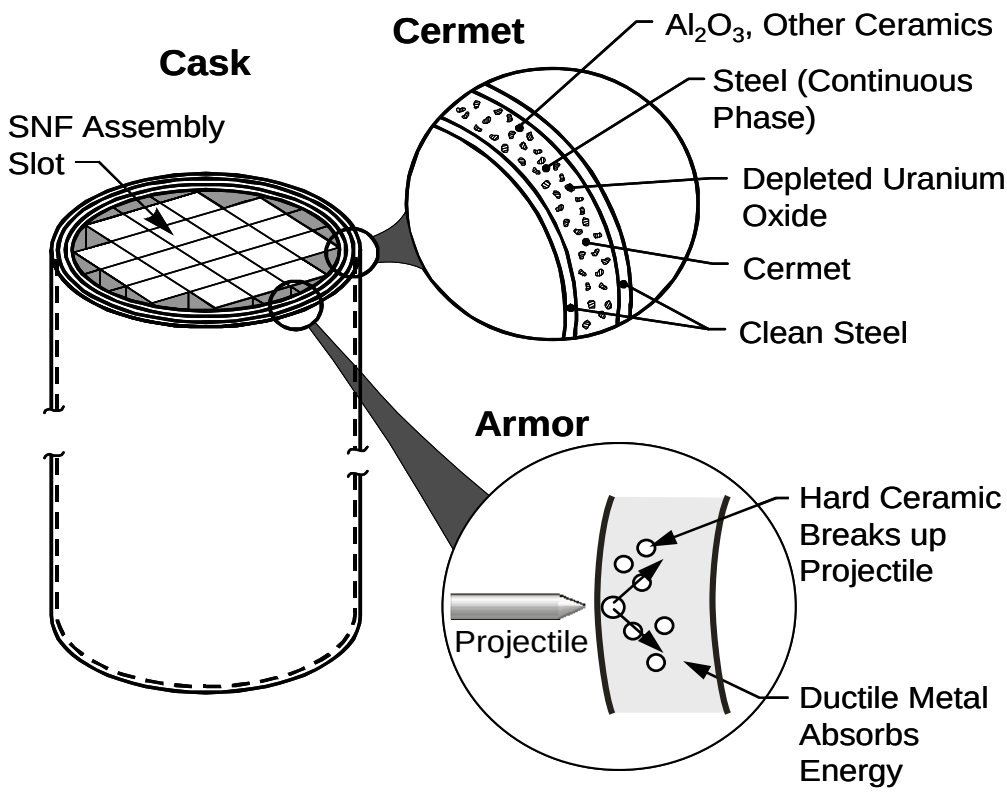

Fig. 1. Design of cermet cask.

Benefits of Cermet Casks

Cermet casks have outstanding properties relative to steel and other traditional materials of cask construction. The addition of DUO_2 ceramic particulates can increase SNF cask capacity for a given maximum cask weight or diameter (provide better shielding and thus thinner walls); improve repository performance [modify the near-field waste package (WP) environment (Eh, pH, and sorption)] to reduce radionuclide releases]; and dispose of excess depleted uranium—a potential waste form. Casks with Al_2O_3 and DUO_2 cermets can be designed with very high resistance to assault, an area which there are increasing concerns [2]. In fact, aluminium oxide cermets have been traditionally used as tank armor. Other additives provide additional benefits.

Fabrication Methods

Cermets are materials of choice for use in drill bits, armor, brake disks, and other extreme environments. The properties that make these materials so useful also make them difficult to fabricate. Cermets are difficult to machine and almost impossible to weld in thick sections. Therefore, two powder-metallurgy fabrication methods are being developed to fabricate cermet casks without machining or welding of the cermet.

In each process, a mixture of iron and ceramic powders is ultimately converted into a high-integrity SNF cask. The recently patented [3] Forge Cermet Cylinder (FCC) process produces the cylindrical cask body in a near-final form as a single piece. The FCC process minimizes the number of processing steps and maximizes cermet performance; however, large equipment is required for cask fabrication. The Cermet Extrusion Section (CES) process produces extruded cermet pieces that are then assembled into the cask body. The size of the individual pieces minimizes process equipment sizes and facility investments but adds steps to the fabrication process and results in a lower-cermet- content cask.

The FCC process (Fig. 2) consists of the following steps [3].

- *Preform fabrication*. A preform slightly larger than the final annular cask body is constructed of steel and serves as the inner and outer layer of clean steel in the final cask. The preform consists of the inside, outside, and top surfaces of the cask body but excludes the cask bottom.

- *Preform filling*. The preform is filled with a particulate mixture of DUO_2, other ceramics, and steel powder. This involves adding layers of the particulate mixture and then compacting each layer before the next layer is added. The composition of the mixture can be varied in the radial and vertical directions.

- *Welding, heating, and gas evacuation*. After the filling is completed, an annular ring is welded to the preform to create a loaded, sealed annular preform. The preform is then evacuated while being heated, which removes gases in the void spaces in the particulate mixture and those gases sorbed on the particulates.

- *Forging.* The preform is heated and compressed to (1) eliminate void spaces and (2) weld the metal particles together to form a continuous, strong steel matrix containing various ceramic particulates. Two standard industrial processes to consolidate the preform and particulate mixture currently exist.

  – <u>Traditional forging.</u> The hot heated perform can be hammered to consolidate the particulate mixture into a cermet and produce the final cask form.

– Ring-rolling forging. The hot loaded preform can be placed in a ring-rolling machine and rolled to its final form.

- *Finishing*. The cask bottom is welded onto the cylindrical cask body. After completion of this step, a vertical boring mill is used to obtain the final dimensions and to drill holes in the top of the cask for the lid bolts. All welding and machining operations are performed on the steel preform, not on the internal cermet. This avoids the difficult operations of welding or machining cermets.

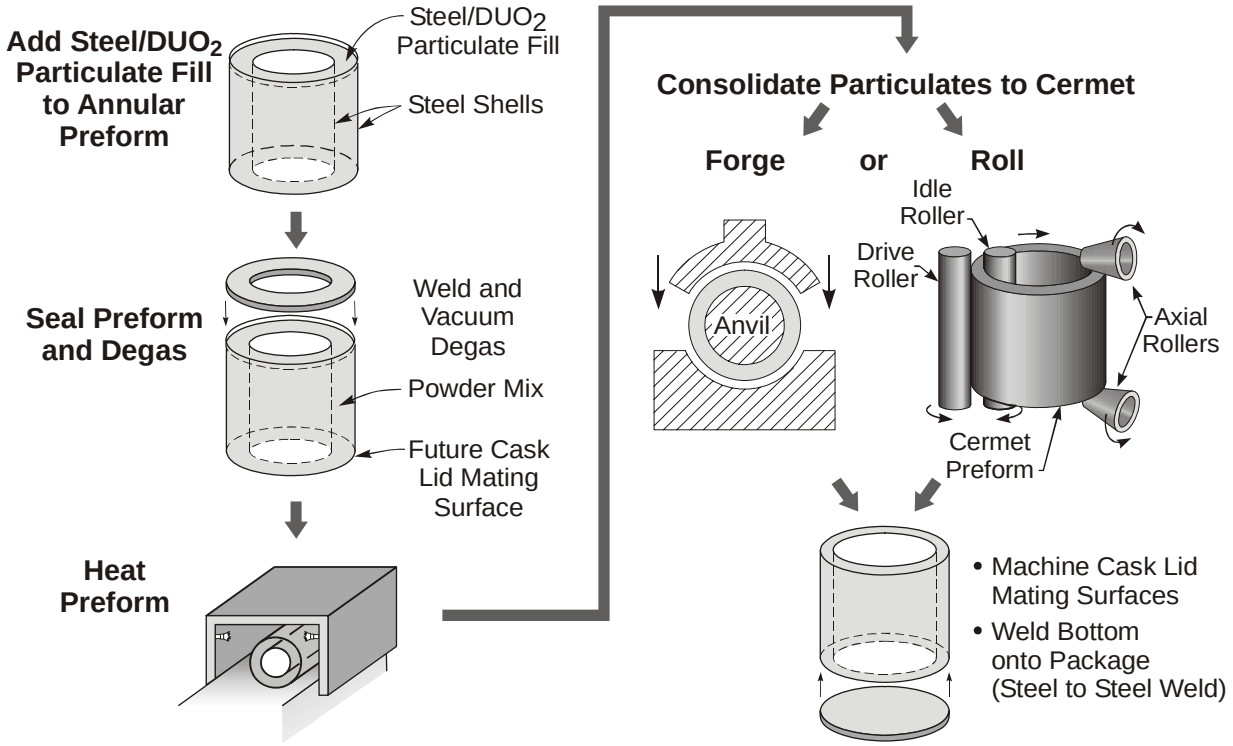

Fig. 2. FCC process for the manufacture of DUO_2-steel SNF casks.

The CES process [4] produces extruded cermet segments that are then assembled into the cask body. Figure 3 shows the various pieces required to fabricate a cask. Each segment is curved to prevent radiation line-of-sight problems along seams in the cask and thus assure uniform shielding characteristics. Studies are currently evaluating the use of 12 to 48 extruded segments to make a complete cask.

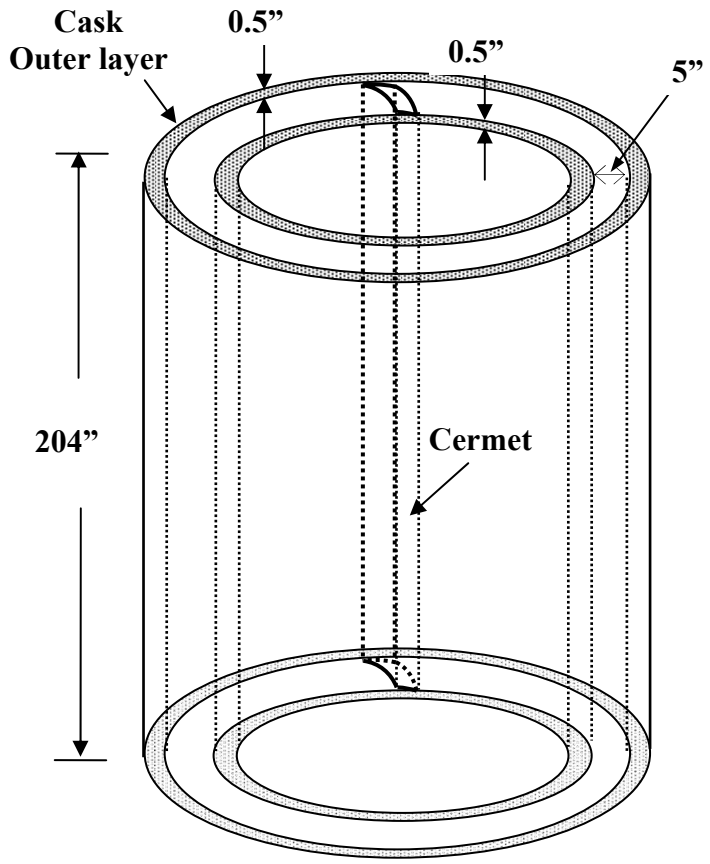

Fig.3. CES cask with cermet segments between inner and outer cask shells.

The FCC and CES processes have many similarities. The cermet is made by filling long steel boxes with the appropriate powder mixtures, welding tops onto the boxes, and then heating and evacuating the gases from the boxes. The filled boxes are then hot extruded to consolidate the compacted powder mixture into a cermet. The extrusion process produces the desired final cross section. The extruded cermet sections will be press fitted between two steel cylinders to produce the final desired shape. Major advances in extruding technology have occurred in the last decade that (1) allow the original box to be filled with a variable-composition powder that results in a variable-composition cermet and (2) enable high-temperature steel extrusions. Final processing would include a heat-treatment step to bond the cermet sections, inner steel cylinder, and outer steel cylinders together.

The small size and low weight of the individual pieces minimize CES process equipment sizes and facility investments but adds steps to the fabrication process. Each of the cermet sections requires a full steel exterior for the extrusion process. Consequently, the greater the number of cermet sections used to manufacture the cask, the more steel that is located in interior sections of the cask, thus reducing the fraction of the cask made of a cermet.

Economic Assessments

A series of studies have been conducted to understand and develop the manufacturing processes and thus develop estimates for manufacturing costs for various levels of cask production, cask production technologies, and different input assumptions. The FCC process has potentially the lowest fabrication costs, but it requires significant R&D and is economic only with large production runs. The alternative CES process has significantly lower R&D requirements and becomes a potentially viable production process with relatively low cask production rates. The economics are sensitive to the price of DUO_2 particulates. A joint effort between the United States and Russia is under way to develop low-cost methods using cold-wall melters [5] for production of DUO_2 particulates from the expected feed from U.S. plants that are being built for conversion of DUF_6 to a mixture of DU_3O_8 and DUO_2 for long-term storage. The conditions under which the cask costs are competitive are described.

Conclusions

Cask material properties determine the limits of SNF cask performance for storage, transport, or disposal (i.e. WPs). Because of inherent material characteristics, cermet cask performance can significantly exceed the performance of traditional cask materials. The intrinsic costs of materials in cermet casks are low. Consequently, the viability of cermet casks depends upon development of economic cermet cask fabrication methods. Two fabrication methods have been developed. Initial assessments indicate that the fabrication methods are technically viable and economically competitive.

Acknowledgments

This work was performed at Oak Ridge National Laboratory under the auspices of the U.S. Department of Energy Depleted Uranium Uses Research and Development Program. Oak Ridge National Laboratory is managed by UT-Battelle, LLC, for the U.S. Department of Energy under contract DE-AC05-00OR22725. Additional information can be obtained from forsbergcw@ornl.gov.

References

1. Forsberg, C. W. and L. R. Dole, 2003, "An Integrated Once-Through Fuel-Cycle with Depleted Uranium Dioxide SNF Multifunction Casks," *Proc. Advances in Nuclear Fuel Cycle Management III, Hilton Head Island, South Carolina, October 5–8, 2003,* American Nuclear Society, La Grange Park, Illinois.

2. National Research Council, 2005, *Safety and Security of Commercial Spent Nuclear Fuel Storage*, Public Report, Washington, D.C.

3. Forsberg, C. W. and V. K. Sikka, 2004, *Manufacture of Annular Cermet Objects,* U.S. Patent 6,811,745, November 2, 2004.

4. Forsberg, C. W., T. N. Tiegs, and V. K. Sikka, 2005, "Powder-Metallurgy Experiments and Manufacturing Studies on DUO_2-Steel Cermets for Spent Nuclear Fuel Casks," *10th International Conference on Environmental Remediation and Radioactive Waste Management, September 4-8, 2005, Glasgow, Scotland*, ICEM-1350.

5. Gotovchikov, V. T., et al., 2005, "Use of an Induction Cold Crucible Melter to Manufacture Depleted Uranium Dioxide (DUO_2) Particles for Use in Spent Nuclear Fuel Casks," *10th International Conference on Environmental Remediation and Radioactive Waste Management, September 4-8, 2005, Glasgow, Scotland*, ICEM-1353.