Modeling of Recovery Boiler Tube Wall Panels to Investigate the Effect of Attachment Welds on Stress-Assisted Corrosion

Gorti B. Sarma[1], Steven J. Pawel[2], and Preet M. Singh[3]
[1]Computer Science and Mathematics Division, Oak Ridge National Laboratory, Oak Ridge, TN 37831-6008
[2]Metals and Ceramics Division, Oak Ridge National Laboratory, Oak Ridge, TN 37831-6156
[3]School of Materials Science and Engineering, Georgia Institute of Technology, Atlanta, GA 30332

ABSTRACT

Stress-assisted corrosion (SAC) is a term given to waterside corrosion of steel recovery boiler tubes that occurs as a result of a combination of stress and corrosion, most commonly in the immediate vicinity of external attachment welds. A finite element model has been developed to perform thermal and mechanical analyses of tube wall panels containing attachment welds, in order to examine the effect of the attachment weld on the stress distribution in the tubes. The results of the analyses show that effects of the attachment weld are confined to a short section of the tube close to the weld, and that the constraint from the weld on the free expansion of the tube alters the stress distribution near the weld. The variation in hoop stress at the waterside surface during a normal operating cycle is different for tubes with and without an attachment weld, and provides a possible explanation for the observation of SAC in tubes only near the attachment welds. Modeling of tube wall panels made of co-extruded composite tubes shows that co-extruded tubing may be less susceptible to SAC than its plain carbon steel counterpart.

INTRODUCTION

Kraft recovery boilers are used by the pulp and paper industry for the combustion of certain byproducts of the pulping process to recover chemicals that can be reused in pulping, while at the same time generating process steam. The boilers are constructed of various types of steel panels made of tubes that have pressurized water flowing through them. The tubes in the floor and the lower portion of the walls of the boiler were originally made out of carbon steel. Since the late 1980's composite tubes, with a base material of SA210 carbon steel covered by an outer protective clad layer of 304L stainless steel, have been used to prevent fireside corrosion in the lower furnace. However, above the level of the tertiary air ports the wall tube panels are typically made of carbon steel, since the problems with fireside corrosion are not as severe.

Stress-assisted corrosion (SAC) is a term given to a particular manifestation of waterside corrosion of steel boiler tubes that seems to result from a combination of stress and corrosion, particularly during periods (such as shutdowns) in which the water chemistry within the tubes can be relatively aggressive toward steel. Most commonly, SAC appears immediately adjacent to external (non-pressure) attachment welds on the tube waterside as short clusters of crack-like indications perpendicular to the direction of the associated attachment weld [1]. These welds are used to attach various types of structures to the tube wall panels, and they typically span several tubes. The SAC indications appear to be confined to small sections of the tubes close to the weld, with few or no indications being observed away from the welded section of the tube or on tubes without attachment welds. The majority of these indications are oriented parallel to the length of the tube, suggesting that a tensile circumferential or hoop stress component at the waterside surface of the tubes would lead to their formation and growth.

In order to better understand the effect of the attachment welds on the development of stresses and on potential influence on SAC conditions, panels of these tubes were modeled using the finite element method, and the results of the modeling work are presented in this paper. The virtual panels were subjected to temperature conditions typically observed during normal boiler operation, and changes in the resulting stresses were analyzed. Anecdotal evidence suggests that composite tubes with a 304L stainless steel clad layer are not susceptible to SAC, so the modeling work was used to study the differences in stress variations between panels made of carbon steel tubes and composite tubes.

FINITE ELEMENT MODELING

The finite element modeling work was carried out using the commercial software package ABAQUS [2]. The basic approach involves developing a finite element mesh to discretize the geometry under consideration, and applying

suitable initial and boundary conditions to solve for the temperature or stress distribution. For the wall tube panels, the first task undertaken was to develop a two-dimensional (2-D) model to analyze the welding between a tube and membrane to form the wall panel. The stress distribution obtained from the 2-D analysis was mapped to a three-dimensional (3-D) model for the wall panel containing the attachment weld. For both the 2-D simulation of welding to make the panels and the 3-D simulation of normal operating cycles, the thermal and mechanical analyses were carried out separately in a sequentially coupled manner. The thermal analysis was performed first to determine the temperature distribution, and the resulting temperature field was then used in the mechanical analysis to compute the stress distribution.

Analyses of Welding to Make Panels

Assuming symmetry, the 2-D mesh was developed using 4-node linear quadrilateral elements for one half of the tube and the adjacent membrane. The welding process was assumed to be completed in four steps, corresponding respectively to application of the top weld, cooling to room temperature, application of the bottom weld, and cooling to room temperature. The elements in the mesh corresponding to the bottom weld were removed from the model during the first two steps, to remove any constraint effects due to the presence of these elements. The thermal analysis of the welding step requires modeling the heat input from the welding arc. Based on earlier work involving a study of recovery boiler floor tubes [3], the heat input was modeled by prescribing a distributed body heat flux, q, using an ellipsoidal Gaussian distribution function [4],

$$q = \eta \frac{6\sqrt{3}VI}{abc\pi\sqrt{\pi}} \exp(-3[(x-x_0)^2/a^2 + (y-y_0)^2/b^2 + \{v(t-\tau)\}^2/c^2]) \tag{1}$$

In the above expression, V is the voltage, I is the current, η is the efficiency, a, b and c are the semi-axes of the ellipsoid along the three coordinate axes, x_0 and y_0 specify the location of the maximum heat flux in the plane, v is the welding speed, t is time, and τ is half of the time increment for completing the weld on one side. The heat source corresponding to the welding arc was assumed to move in a direction perpendicular to the plane of the 2-D model, approaching from one side and reaching the plane over the duration τ, (which corresponds to half the time increment of the welding step), before moving away from the plane on the other side. The parameters used for the welding step are listed in Table 1. Heat loss by convection and radiation was assumed on all exposed surfaces during the cooling step that followed each welding step. The temperature contours after the application of the bottom weld are shown in Figure 1 on the left.

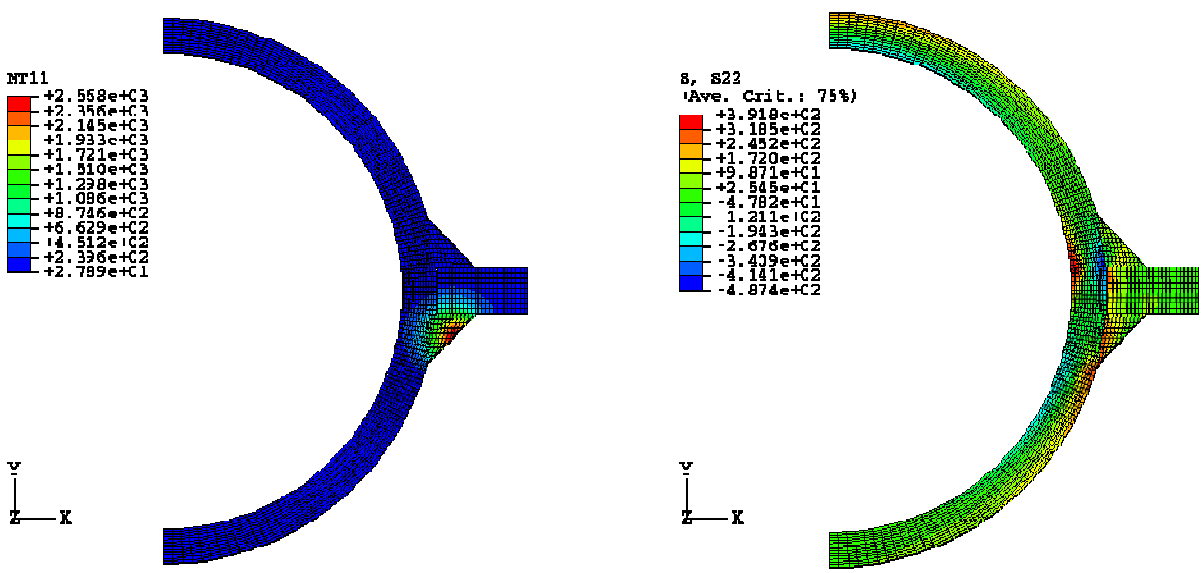

Figure 1: 2-D model for welding of SA210 carbon steel tube and membrane showing the distribution of temperature [°C] after the application of the bottom weld (left), and distribution of stress [MPa] (hoop component in the tube, transverse component in the membrane and weld) after the welding process (right).

Table 1: Parameters used to model the welding between tube and membrane.

V	I	η	a	b	c	x_0	y_0	v	τ
425 V	29 A	0.85	7 mm	7 mm	2.38 mm	40.64 mm	6.5 mm	21.17 mm/s	0.05625 s

The temperature distribution from the thermal analysis was used in the subsequent mechanical analysis to compute the stresses due to the panel fabrication. The initial stress values in the tube for the mechanical analysis were assumed to be zero for the SA210 carbon steel tubes. The composite tubes are typically made by co-extrusion, and residual stress values through the tube wall thickness were prescribed as initial stresses. These stress values were generated using X-ray and neutron diffraction measurements as part of an earlier project to study the cracking problem on the fireside surface of the composite tubes in recovery boiler floors [5]. The stress values were assumed to be axi-symmetric and a function of only the distance along the radial direction. The initial stresses in the membrane were assumed to be zero. Contours of the hoop component of stress in the tube and the transverse component of stress in the membrane are shown on the right in Figure 1. The results of the mechanical analysis were used to provide initial stress values for the 3-D model.

Analyses of Tube Wall Panel under Normal Operation

A 3-D finite element model was developed for the thermal and mechanical analyses of the wall tube panel and the attachment weld. The tubes, membranes, and the attachment plate were discretized using 8-node quadrilateral shell elements, and the welds were discretized using 15-node quadratic triangular prism elements. Assuming symmetry conditions, one quarter of the tube wall panel containing the attachment weld was considered for the model. The length of the model along the axial direction of the tubes was 12 inches (304.8 mm), and the weld for the attachment plate was assumed to be halfway along the length of the model. For both carbon steel and composite tubes, the tube outer diameter was assumed to be 3 inches (76.2 mm), and the width of the membrane between two tubes was assumed to be 1 inch (25.4 mm). The wall thickness of the carbon steel tube was assumed to be 3/16 inch (4.76 mm). For the composite tube, the wall thickness was assumed to be 1/4 inch (6.35 mm), with a carbon steel layer of 3/16 inch (4.76 mm) and an outer stainless steel layer of 1/16 inch (1.59 mm).

For the thermal analysis, the panel initially at room temperature was taken through two operating cycles, each of which consisted of steps corresponding to normal operating conditions followed by cooling to room temperature. Each step was analyzed assuming steady state conditions. Under normal operating conditions, uniform heat flux was prescribed on the fireside (top) surface of the panel, and the value was chosen such that a temperature of about 350 °C was obtained at the crown of the tube on the fireside surface. The inside surfaces of the tubes were assumed to be in contact with pressurized water at 305 °C, and the cold side of the panel was assumed to be exposed to air at 100 °C, resulting in convective and radiant heat losses at these surfaces.

The thermal analysis provided temperature distribution values, which were then used in the mechanical analysis. The stress values determined from the 2-D analysis of the welding of the tube and membrane were applied as initial stresses in the 3-D model. Stress values for the tube elements were assigned based on the circumferential and radial distance, while stress values for the membrane elements were assigned based on distance along the width and thickness directions. Symmetry about the x-axis was assumed on the yz-plane at $x = 0$, and symmetry about the z-axis was assumed on the xy-plane at $z = -304.8$ mm. Nodes on the side opposite to each symmetry plane were constrained to move with the same displacement along that particular axis, since the geometry under consideration was a small portion of the boiler wall, and was therefore not allowed to undergo any in-plane twisting. Rigid body motion of the panel was prevented by setting the y-displacement of one of the corner nodes to zero. During normal operation, load due to pressurized water flowing in the tubes was applied as internal pressure of 8.62 MPa (1.25 ksi) on the inside surface of the tubes.

While initial stresses from 2-D welding analysis between the tube and membrane were included, stresses due to the attachment weld were not considered in the current analyses. The reason for this is that unlike the weld between the tube and membrane, which is applied along a straight line parallel to the tube axis, the welding of the attachment plate follows a more convoluted path along the circumference of tubes and across the membranes. Therefore, this welding process cannot be easily approximated using a simple 2-D model, and needs to be simulated considering the full 3-D geometry. An attempt was made to model the welding process using the 3-D model for the tube wall panel

described above, but the analysis proved to be very time consuming and non-trivial. Therefore, as a first approximation, the effects of the attachment weld on the residual stresses were ignored in the current analyses. As shown later in the results and also from observations of tube samples, the effect of the attachment weld appears to be confined to a small section of the tube close to the weld. Efforts are underway to incorporate the stresses due to the attachment weld into the model, and a possible approach is to limit the length of the model in the axial direction to make the problem more tractable.

SIMULATION RESULTS

The finite element mesh for the tube wall panel and the temperature distribution during normal operation are shown in Figure 2. The contours are based on temperature values on the surface with the positive normal for the shell elements, which corresponds to the outside surface of the tube and the fireside surface of the membrane. The highest temperature values are on the membrane surface, since the tube is cooled more effectively by pressurized water flowing through it. Figure 3 shows the distribution of the σ_{11} component of the stress on the outside surface of the tube and on the fireside surface of the membrane. This component of stress corresponds to the circumferential or hoop stress in the tube, and the stress in the short transverse direction along the width of the membrane.

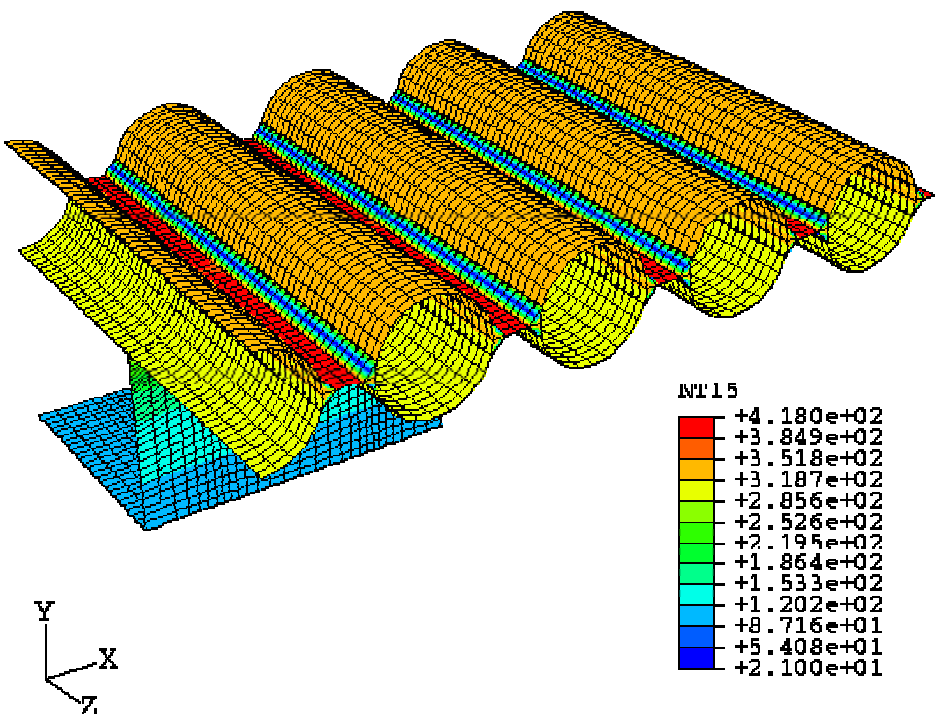

Figure 2: Finite element mesh of a tube wall panel with an attachment weld showing contours of temperature [°C] on the outside surface of the tube and the fireside surface of the membrane.

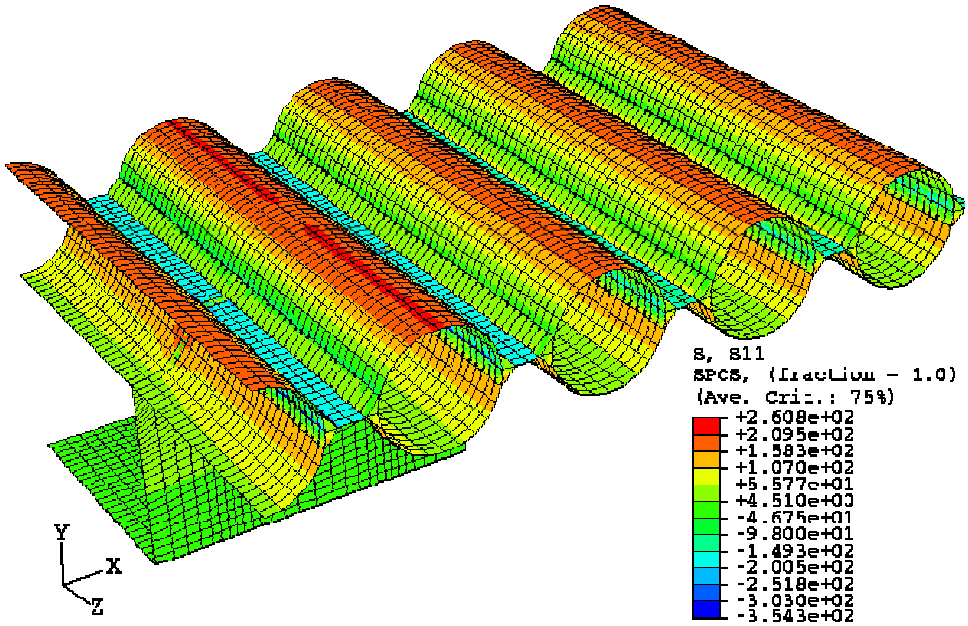

Figure 3: Finite element mesh of a tube wall panel with an attachment weld showing contours of stress [MPa] (circumferential component on the outside surface of the tubes, transverse component along the width on the fireside surface of the membrane).

The effect of the attachment plate is felt during a normal operating cycle in the form of constraint on the expansion and contraction of the panel during the heating and cooling stages, respectively. This is illustrated in Figure 4, which shows the deformed mesh under operating conditions, where the displacements have been magnified by a factor of 100 for clarity. It is evident that the attachment weld prevents the free expansion of the tubes joined to the plate, and this in turn affects the stress values in the vicinity of the weld. Stress contours in the panel close to the attachment weld are shown in Figure 5, indicating fairly sharp gradients in the stress close to the weld. The stress values change significantly on either side of the weld over a distance corresponding to 4–5 elements, which is about 0.96 inches (24.4 mm). Beyond this distance the stress distribution does not vary along the axial direction.

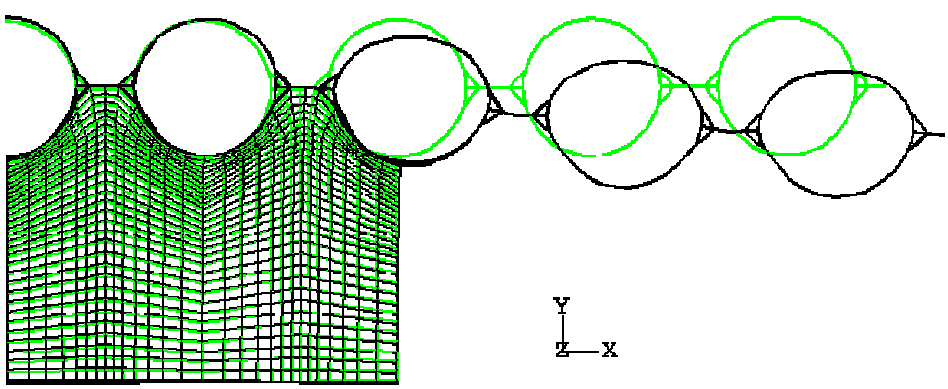

Figure 4: Initial and deformed mesh for the tube wall panel showing the constraining effect of the attachment plate on the free expansion of the tubes. Displacements have been magnified by a factor of 100 for clarity.

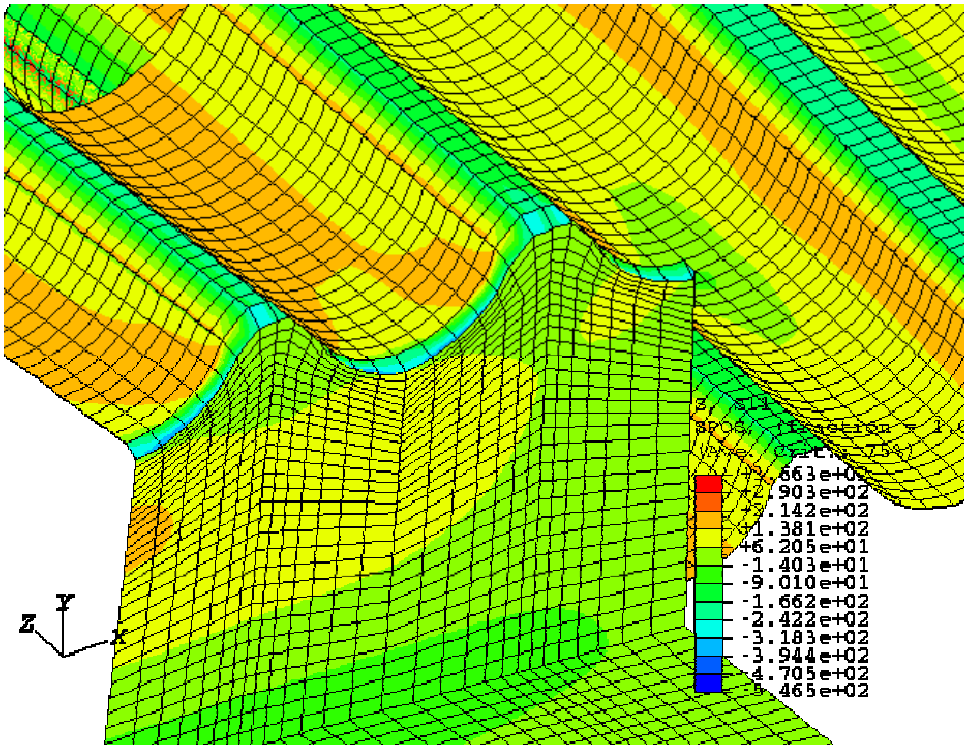

Figure 5: Close up view of the finite element mesh close to the attachment weld showing gradient in contours of stress [MPa] (circumferential component on the outside surface of the tubes, transverse component on the fireside surface of the membrane).

As mentioned earlier, examination of a large number of samples has shown that the SAC indications that form on the waterside surface of carbon steel tubes are predominantly oriented parallel to the axial direction, suggesting that the component of stress in the circumferential or hoop direction plays a dominant role in the formation and propagation of these stress-assisted corrosion paths. Therefore, in examining the results of the simulations, special emphasis was given to the variation in hoop stress at the waterside surface on the cold side of the panel at the crown of the tube. Results were examined for a tube without any attachment weld and for a tube with an attachment weld at two locations—just under the weld and some distance away from the weld where the stress showed no variation in the axial direction.

Figure 6 shows the variation of the hoop stress for a SA210 carbon steel tube without an attachment weld. The time along the x-axis is in arbitrary units and may be viewed as a sequence of steps, since each step in the analysis of a normal operating cycle constitutes a steady state calculation. During a normal operating cycle, the temperature increases from initial room temperature value to operating temperature and comes back to room temperature upon shutdown. Two cases are shown in Figure 6, and also in all subsequent figures showing the hoop stress variation—corresponding to a case with no initial stresses in the panel, and a case with initial stresses in the tube and membrane computed using the 2-D model as discussed above. Clearly, it is not possible to fabricate the panel with no initial stresses, and this case is only hypothetical and has been included to provide an indication of how the hoop stress changes as a consequence of the thermal and mechanical loading during operation.

As shown in Figure 6, for the case with no initial stresses, the hoop stress becomes highly tensile at operating temperature, but returns to zero value upon shutdown. When stresses due to welding of the tube and membrane are included in the model, the hoop stress is slightly tensile initially, and becomes highly tensile at operating temperature. Upon shutdown after the first cycle, the hoop stress does not return to the initial value, but instead becomes slightly compressive indicating that some amount of plastic deformation has taken place. A second cycle causes the hoop stress to again become tensile at operating temperature, but no additional plastic deformation occurs, and the stress returns to the compressive value that it had at the end of the first cycle.

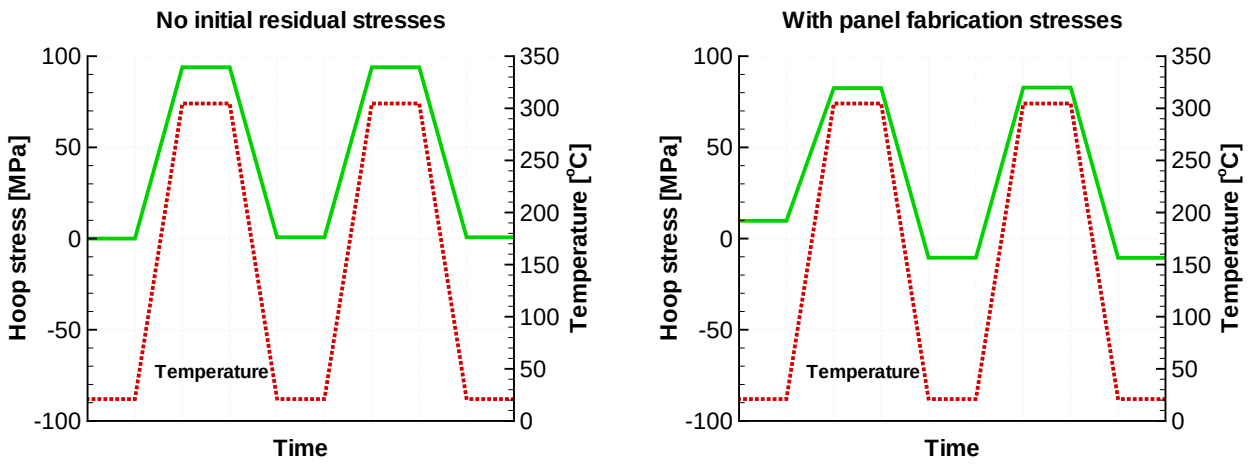

Figure 6: Variation of hoop stress with temperature for a carbon steel tube without an attachment weld at the waterside surface on the cold side of the wall panel during two normal operating cycles.

Variation of hoop stress at the waterside surface for a tube with an attachment plate weld at a location just under the weld is shown in Figure 7 for the cases without and with initial panel fabrication stresses. For the case with no initial stresses, the hoop stress becomes tensile upon heating to operating temperature, although the magnitude is smaller than for the tube without the attachment weld. Upon cooling to room temperature at the end of the first operating cycle, the stress is very slightly tensile, indicating a small amount of plastic deformation. When initial stresses due to panel fabrication are considered, the hoop stress initially is slightly tensile, and becomes more tensile upon heating the panel to operating temperature. Upon shutdown at the end of the first cycle, the hoop stress remains tensile but the magnitude is higher than the initial value. A second operating cycle causes the hoop stress to become more tensile at operating temperature and return to the value at the end of the first cycle. The two main differences from the earlier case (Figure 6) for a tube with no attachment weld are, first, the stress after the first operating cycle returns to a compressive value for the earlier case while the stress remains tensile in this case, and second, although the increase in stress is higher, the magnitude of stress at operating temperature is lower for the earlier case.

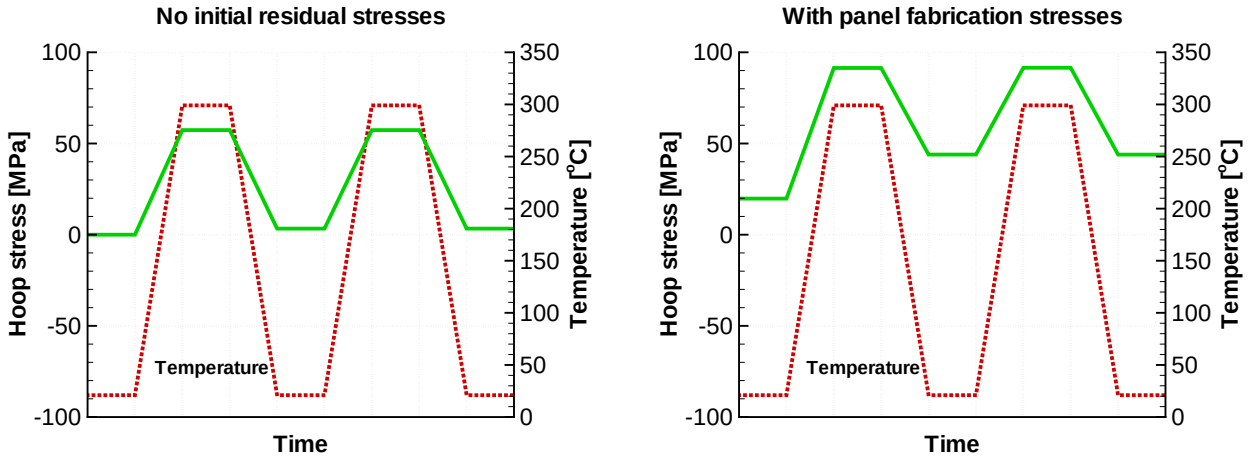

Figure 7: Variation of hoop stress with temperature for a carbon steel tube with an attachment weld at the waterside surface just under the weld during two normal operating cycles.

Figure 8 shows the hoop stress variation on the waterside surface for a tube with an attachment plate weld, but at a location on the cold side of the tube some distance away from the weld. For cases without and with initial panel

fabrication stresses, the hoop stress does not show significant change during an operating cycle. When stresses from joining of tube and membrane are included, the hoop stress is initially compressive, and remains compressive during the operating cycle.

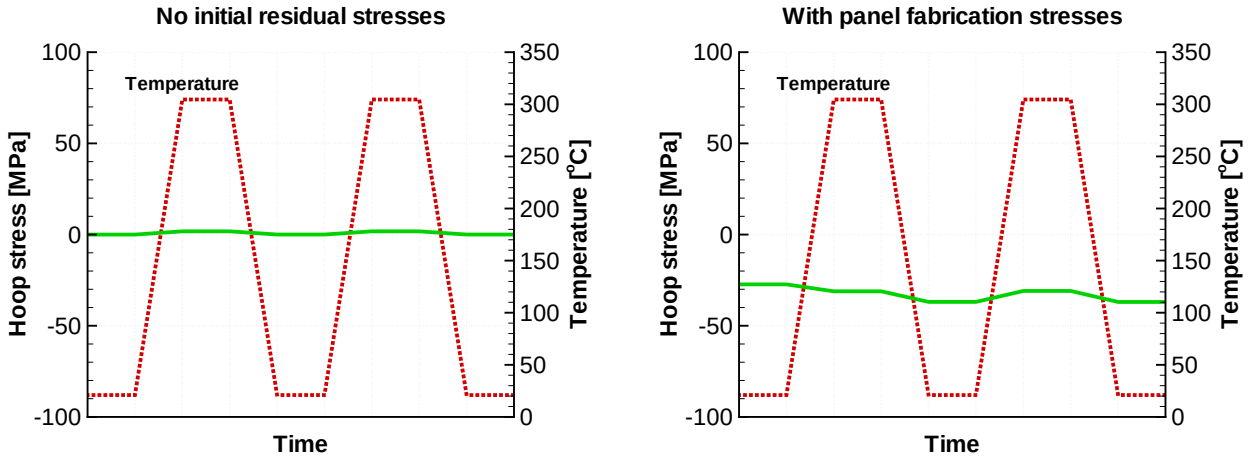

Figure 8: Variation of hoop stress with temperature for a carbon steel tube with an attachment weld at the waterside surface at some distance away the weld during two normal operating cycles.

Differences in the variation of the hoop stress with operating cycles were also examined in a similar fashion for a tube wall panel comprised of composite tubes with 304L stainless steel clad layer. Results are shown for a tube without an attachment weld, and for a tube with an attachment weld just under the weld and some distance away from the weld, respectively in Figures 9–11. For a tube without an attachment weld, the hoop stress becomes tensile upon heating to operating temperature, but becomes compressive upon cooling to room temperature after the first cycle due to some plastic deformation. This is true even when initial stresses from panel fabrication are included, in which case the stress is slightly compressive to begin with and becomes even more compressive after the first cycle.

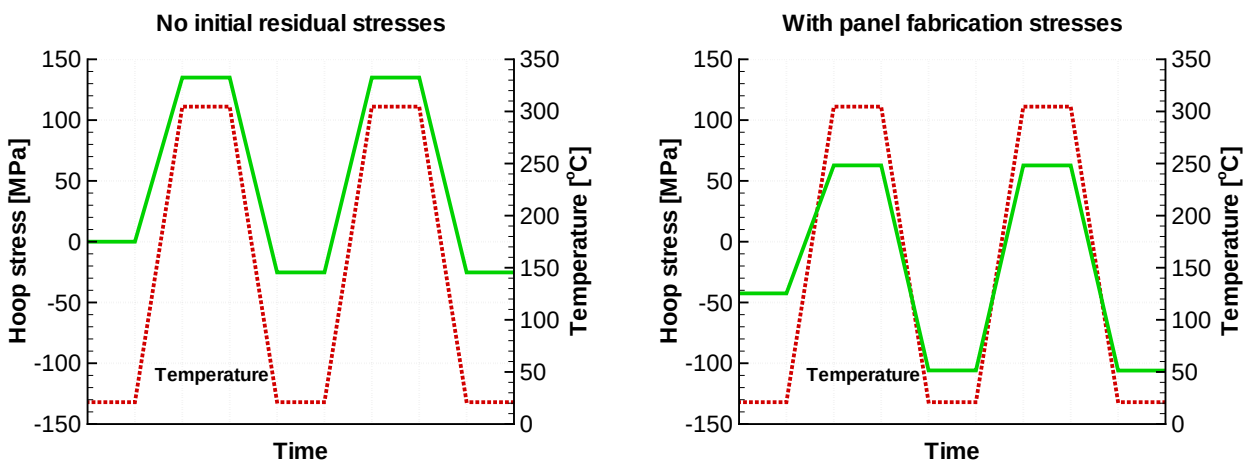

Figure 9: Variation of hoop stress with temperature for a composite tube without an attachment weld at the waterside surface on the cold side of the wall panel during two normal operating cycles.

For a tube with an attachment weld, the hoop stress variation just under the weld is qualitatively similar to the tube without an attachment weld. With no initial stresses, the hoop stress becomes tensile at operating temperature and compressive after the first cycle. When initial panel fabrication stresses are considered, the hoop stress is compressive to begin with and returns to compressive value after the first cycle, although the magnitude is slightly smaller than the initial value.

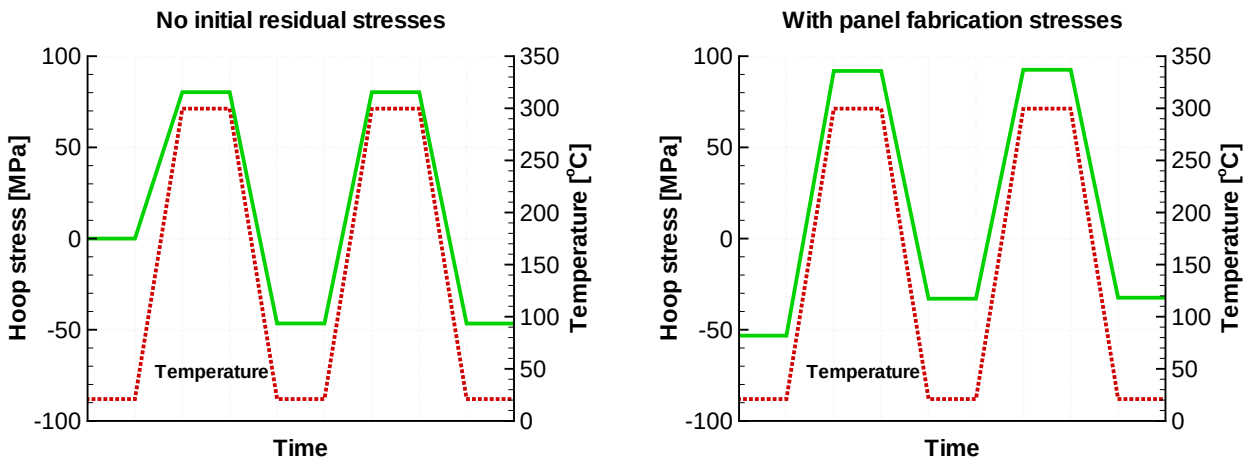

Figure 10: Variation of hoop stress with temperature for a composite tube with an attachment weld at the waterside surface just under the weld during two normal operating cycles.

At a location some distance away from the weld on a tube with an attachment weld, the hoop stress for the case with no initial stresses once again becomes tensile at operating temperature and compressive after the first operating cycle. In this case, the magnitude of change in stress is less than the previous two cases. When panel fabrication stresses are included, the hoop stress becomes less compressive upon heating to operating conditions, and even more compressive upon cooling after the first cycle, with the stress remaining compressive throughout the cycle.

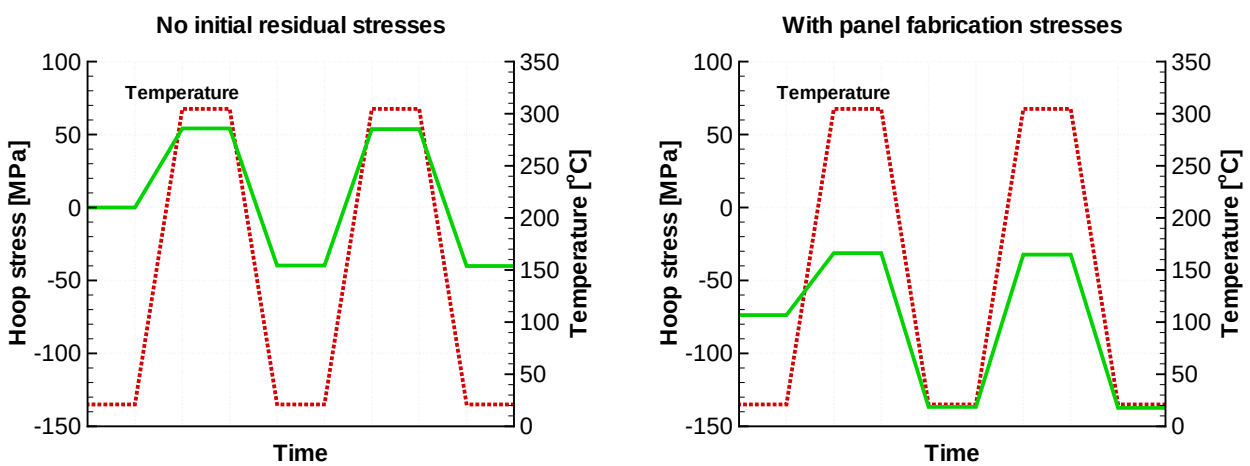

Figure 11: Variation of hoop stress with temperature for a composite tube with an attachment weld at the waterside surface some distance away the weld during two normal operating cycles.

CONCLUSIONS

Finite element modeling has been used to carry out thermal and mechanical analyses of tube wall panels containing attachment welds to investigate the effect of the attachment weld on the stress distribution, and thus the potential contribution to SAC, in the panels. The results of the simulations showed that the stress distribution in a tube is significantly altered by the presence of the attachment weld when compared to a tube that does not have an attachment weld. The constraint from the attachment weld prevents the free expansion of the tubes in that particular section of the wall panel. The modeling results suggest that the effect of the weld on the stress distribution is confined to a short section of the tube (about 1 inch on either side of the weld) along the axial direction, with the

greatest effect felt directly under the weld. This result is consistent with observations of corrosion and cracking on samples of tubes removed from recovery boilers.

The hoop stress at the waterside surface of the tube on the cold side of the panel in general becomes more tensile when the panel is subjected to operating conditions. However, there is a difference in the hoop stress after the first operating cycle for carbon steel tubes without and with an attachment plate weld. In the presence of an attachment weld, the hoop stress returns to a tensile value that is higher than the initial value, whereas for a tube without the attachment weld, the stress returns to a compressive value. At some distance away from the attachment weld, the stress in that tube remains compressive throughout the normal operating cycle. The presence of tensile circumferential stress when the tubes are cooled from operating temperature, when combined with the water chemistry during shutdown, provides the conditions under which SAC can potentially become operational. On the other hand, presence of compressive hoop stress in tubes without attachment welds, or at locations far away from attachment welds, is likely to inhibit SAC.

While the composite tube with a 304L stainless steel clad layer also in general shows tensile stress development upon heating to operating temperature, the hoop stress in this case is initially compressive (as compared to tensile hoop stress for a carbon steel tube) and returns to a compressive stress value (as compared to a tensile stress value for the carbon steel tube just under the attachment weld) after a normal operating cycle. It is worth mentioning that the stress variation in the composite tubes is governed by the thermal expansion mismatch between the stainless and carbon steels, in addition to the thermal and mechanical loading. This difference in the hoop stress variation might provide an explanation for the presence of SAC indications in the carbon steel tubes, and the absence of such indications in the composite tubes. However, this statement must be qualified by noting that the current analyses ignored the initial stresses due to the welding of the attachment plate to the wall panel, and including these stresses could lead to different results. It is felt, however, that since the first operating cycle introduces plastic deformation, the effect of these initial stresses may not be important after the first cycle. This needs to be verified through inclusion of the stresses due to the attachment weld in the model, and will be the subject of further work in this area.

ACKNOWLEDGMENTS

The authors are grateful to Drs. James Keiser, B. Radhakrishnan, Margaret Gorog and Joey Kish for their review of the manuscript. This research was sponsored by the U.S. Department of Energy, Office of Energy Efficiency and Renewable Energy, Industrial Technologies Program, and was performed at Oak Ridge National Laboratory, which is managed by UT-Battelle, LLC, under contract DE-AC05-00OR22725.

REFERENCES

1. Pawel, S. J., et al., "An Experience with Detection and Assessment of SAC in a Recovery Boiler," National Association Of Corrosion Engineers 2004 Annual Conference and Exhibition, New Orleans, March 2004, *Corrosion2004* Paper # 04517.
2. ABAQUS/Standard User's Manual, Version 6.2, Hibbitt, Karlsson & Sorensen, Inc., 2001.
3. Taljat, B., et al., "Modeling Studies of a Composite Tube Floor in Black Liquor Recovery Boilers," *TAPPI Journal*, 82(12), pp. 99-108, 1999.
4. Goldak, J., et al., "A New Finite Element Model for Welding Heat Sources," *Met. Trans.*, 15B, pp. 299-305, 1984.
5. Wang, X. –L., et al., "Residual Stresses Due to Processing of Composite Tubes," Proceedings of the Fifth International Conference on Residual Stress, Institute of Technology, Linkoping University, Linkoping, Sweden, pp. 70–75, 1998.