Low-Cost Bidirectional DC/DC Converter for Multi-Voltage Bus Systems

Gui-Jia Su

Oak Ridge National Laboratory

FY 2005 AOP Task No.: 4.2

Advanced Power Electronics and Electrical Machines Quarterly Review
National Transportation Research Center
January 2005

Prepared by Oak Ridge National Laboratory, managed by UT-Battelle, LLC, for the U.S. Dept. of Energy under contract DE-AC05-00OR22725. The submitted manuscript has been authored by a contractor of the U.S. Government under contract DE-AC05-00OR22725. Accordingly, the U.S. Government retains a nonexclusive, royalty-free license to publish or reproduce the published form of this contribution, or allow others to do so, for U.S. Government purposes.

OAK RIDGE NATIONAL LABORATORY
U. S. DEPARTMENT OF ENERGY

Project Summary

- **Background**
  - A triple voltage bus (14V/42V/H.V.) system may be required in HEVs and FCVs
  - Two separate dc/dc converters are needed with available technologies
  - A bidirectional dc/dc converter is needed
  - It is desirable to integrate the two dc/dc converters to reduce component count, size, and cost

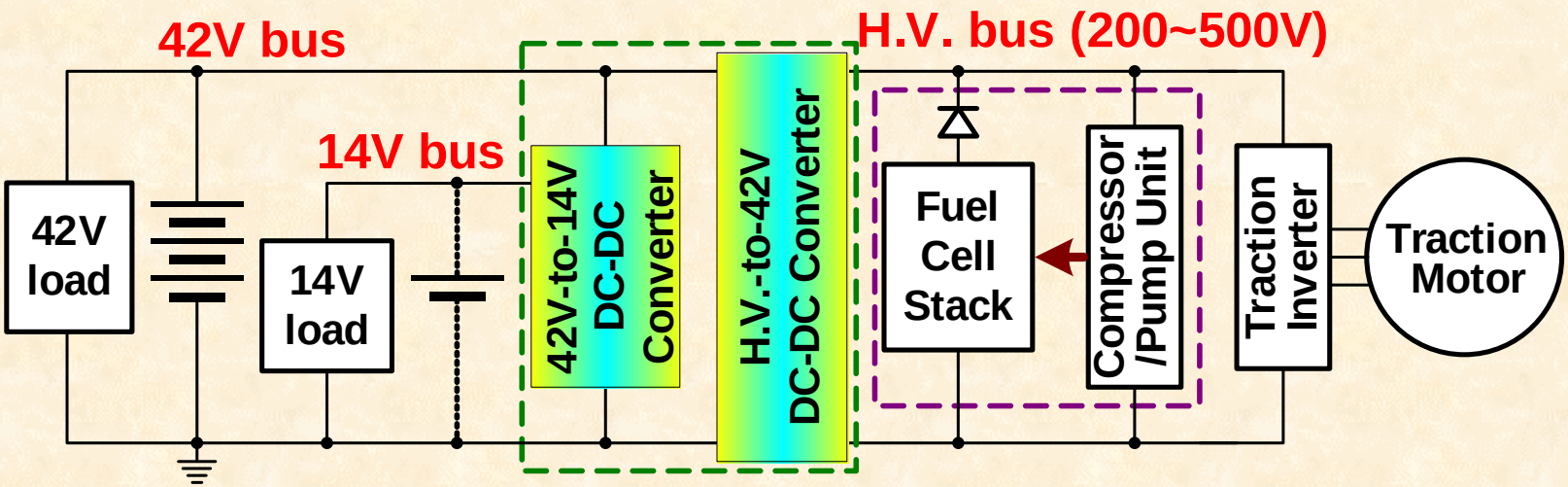

Project Summary (contd.)

- **Approach**
  - Minimize the number of switches to reduce cost
  - Employ soft switching and synchronous rectification to increase efficiency and power density
  - Employ soft switching to lower EMI noise
  - Refine the topology to further reduce components count
  - Adaptable to dual-voltage systems, H.V./42V or H.V./14V

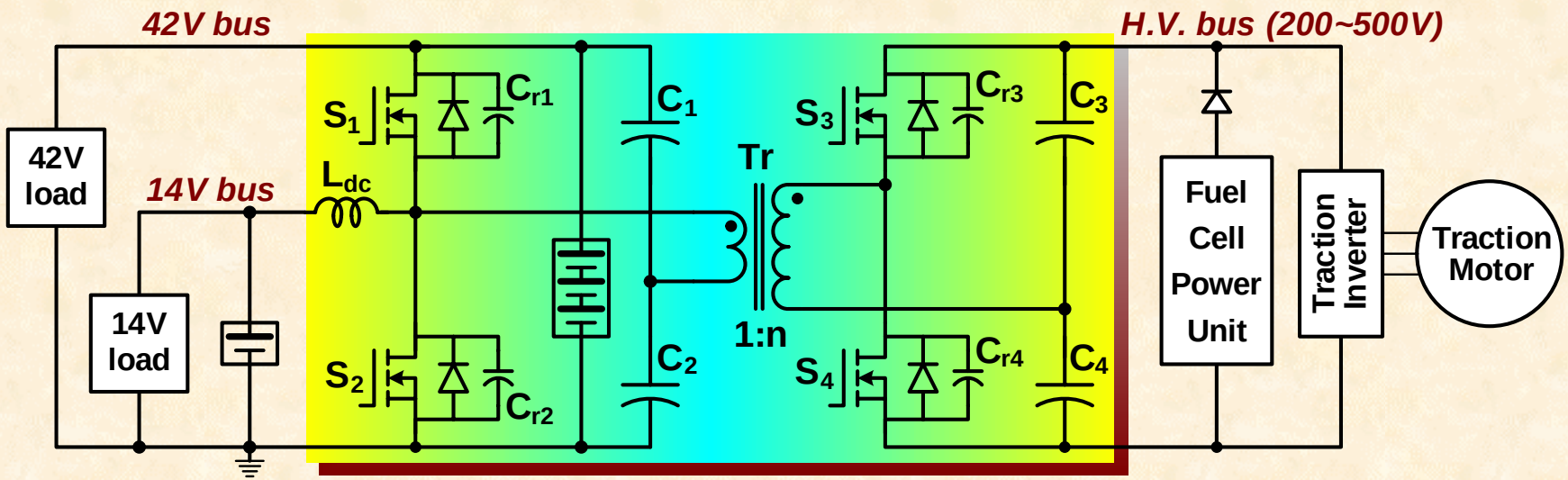

Project Summary (contd.)

- **Expected Outcome**
  - **A dc/dc converter that**
    - can interconnect the three-voltage,14V/42V/H.V. buses and transfer power among the buses
    - adaptable for HEVs and FCVs with a dual-voltage bus
    - reduce the number of components by more than 50% over existing technologies
- **Address Both Mid- and Long-Term Needs**
  - **HEVs & FCVs**
- **Relation to FreedomCAR & Other Projects**
  - **Ballard subcontract: single output, unidirectional**
  - **Contribute to understanding of dc/dc converters and help set FreedomCAR technical targets for dc/dc converters**
- **Funding**
  - **$400K**

Objectives

- **Objective and Goal**
  - Produce dc/dc converter hardware and analysis that will enable quantitative evaluation of integrated dc/dc converter's ability to meet FreedomCAR needs and will assist in setting technical targets
  - Develop integrated power conversion topologies for multiple voltage buses to reduce the size and cost of power electronics components for FCV/HEV propulsion system
- **Dc/dc converter is not included in the FreedomCAR 2010 targets and goals. This project addresses dc/dc converter's**
  - Cost, at least 50% reduction (component level)
  - Volume, 50% reduction

FY 2004 Progress/Results

- **Progress since June 2004 review**
  - Completed fabrication of the first prototype
  - Conducted initial system testing for proof-of-concept

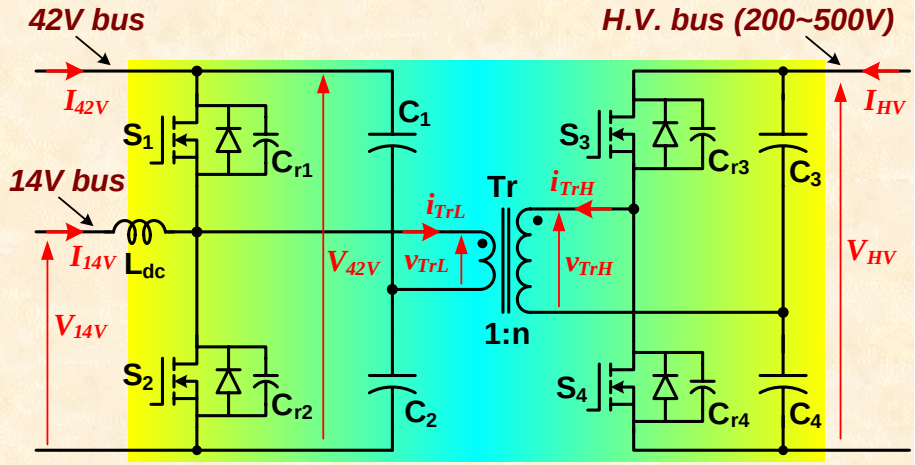

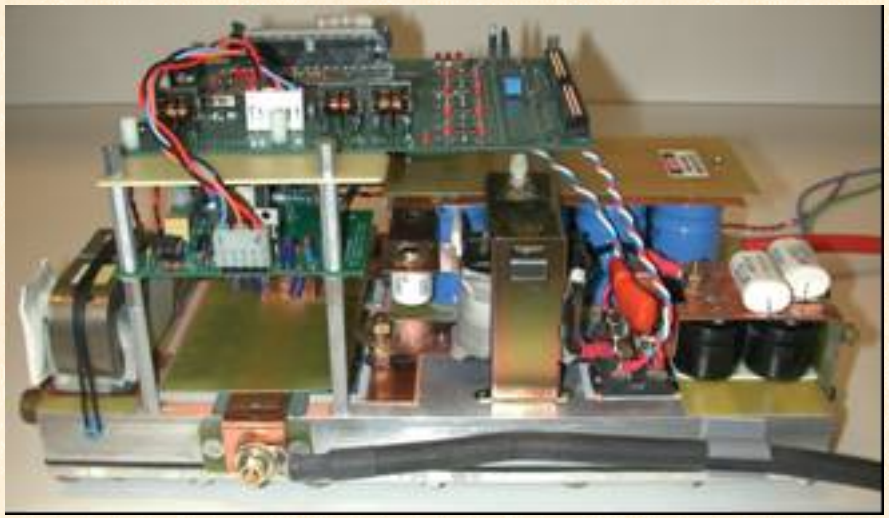

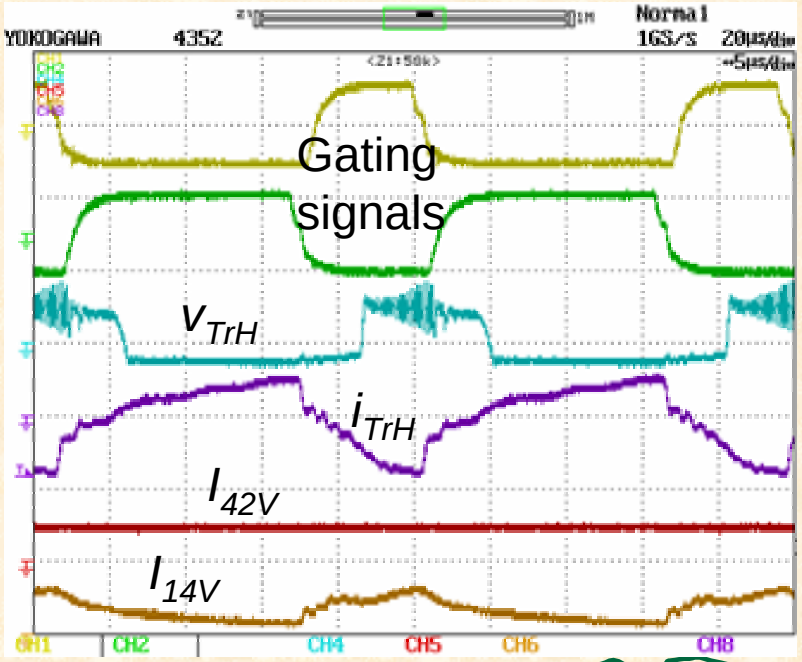

FY 2004 Progress/Results (contd.)

- **Progress as Planned**
  - Simulation work
  - Prototype design and fabrication
- **Accomplishments**
  - Completed simulation study
  - Designed and fabricated 1st prototype
  - Conducted initial system testing
- **Converter Cost Analysis in Progress**
  - Waiting for quotes of the transformer core
  - Manufacturing cost

FY 2005 Plan

- **Major Tasks**
  - Complete the 1st prototype test and cost evaluation
  - Design, fabricate, and test a new 2 kW prototype with reduced part count based on what have been learned from FY 2004
- **Expected Progress/Results**
  - Report of the 1st prototype converter test results and cost analysis, 06/30/05
  - Report on design, fabrication, and test of the new 2 kW prototype with reduced part count, 09/30/05
- **Milestones and Schedule**
  - A new 2kW dc/dc converter prototype and test results, 09/30/05

FY 2005 Progress to Date

- **First Quarter Progress**
  - Refinements on power circuit layout to the 1st prototype
  - More system testing

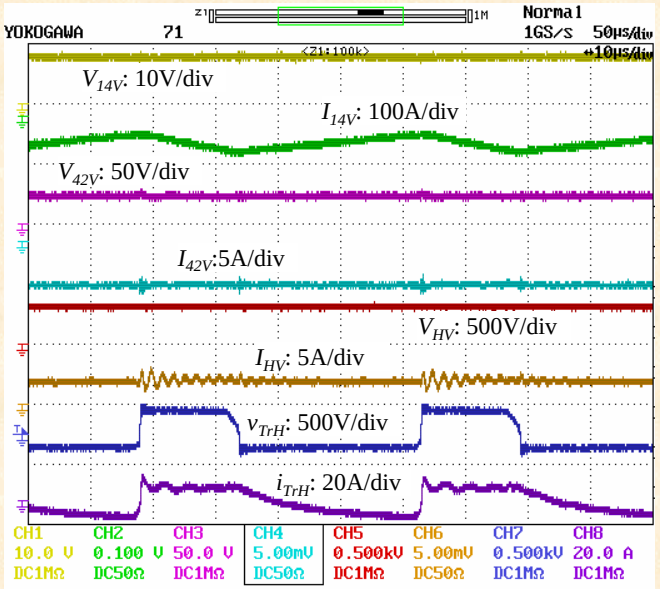

H.V. bus to 14V and 42V buses

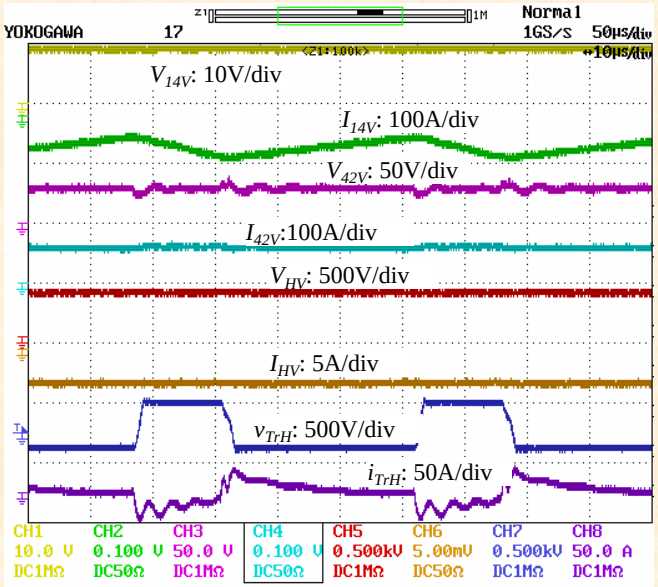

42V bus to 14V and H.V. buses

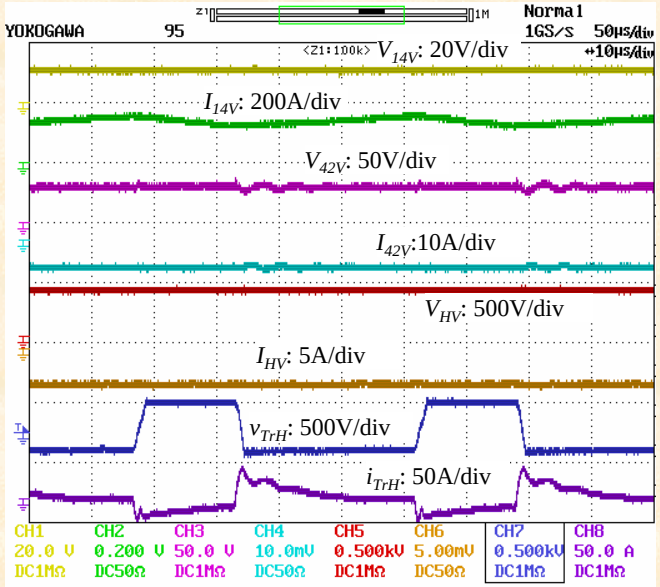

14V bus to 42V and H.V. buses

FY 2005 Progress to Date (contd.)

- **First Quarter Progress (contd.)**
  - Finished design, layout, and assembly of a new DSP PCB using the TI TMS320F2812

- **No delays or changes in the execution plan**
- **Major Technical Accomplishments and Milestones**
  - More system testing data on the 1st prototype
  - No milestones planned during the 1st quarter

Future Plans and Expectations

- **Scale-up designs employing interleaved multiphase configurations**
- **Dc/dc converters for interfacing ultra-capacitors in FCV/HEV applications**
- **Packaging and thermal management**
  - **Evaluate newly developed devices and technologies, and incorporate them into dc/dc converter, if appropriate**