Integrated Inverter for HEVs and Fuel Cell Powered Vehicles

Gui-Jia Su

Oak Ridge National Laboratory

FY 2005 AOP Task No.: 4.3

Advanced Power Electronics and Electrical Machines Quarterly Review
National Transportation Research Center
January 2005

Prepared by Oak Ridge National Laboratory, managed by UT-Battelle, LLC, for the U.S. Dept. of Energy under contract DE-AC05-00OR22725. The submitted manuscript has been authored by a contractor of the U.S. Government under contract DE-AC05-00OR22725. Accordingly, the U.S. Government retains a nonexclusive, royalty-free license to publish or reproduce the published form of this contribution, or allow others to do so, for U.S. Government purposes.

OAK RIDGE NATIONAL LABORATORY
U. S. DEPARTMENT OF ENERGY

Project Summary

- **Background**
  - Electrical motor driven compressors for HVAC are favored in HEVs because of their superior performances over the conventional engine driven counterparts
    - efficient variable speed operation
    - flexible packaging
    - low refrigerant emissions
  - Fuel cell vehicles require an electrical motor driven compressor
  - Existing HEVs employ two separate inverters
  - Purpose of the project is to reduce the system cost

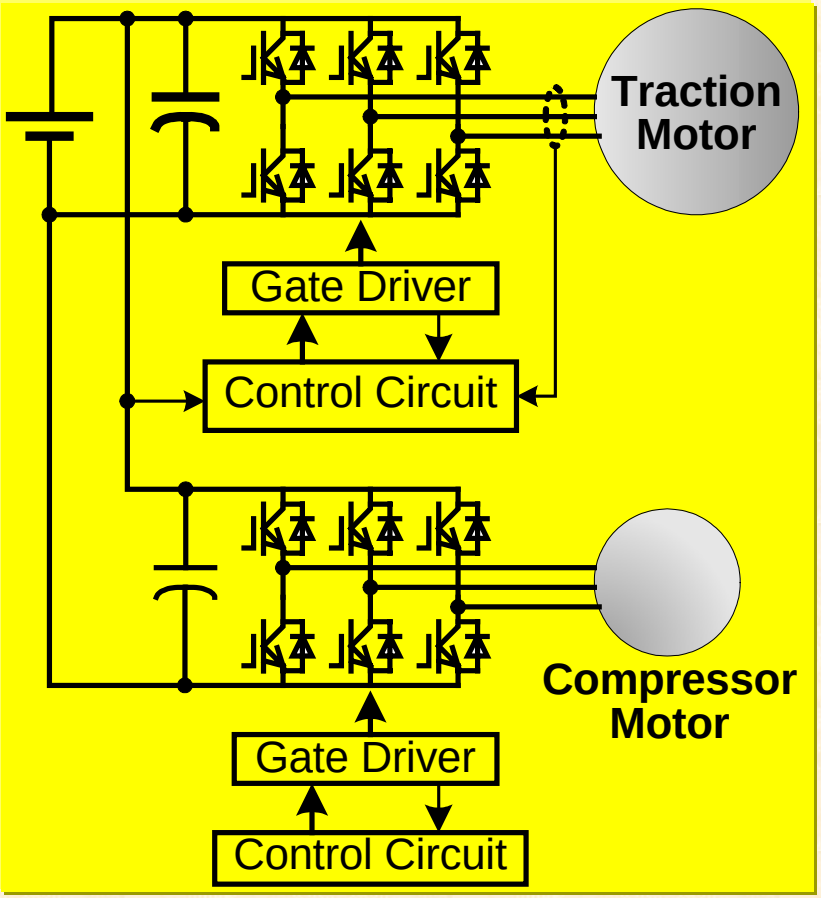

Project Summary (cont'd.)

- **Approach**
  - Use a two-phase motor for the compressor drive
  - Integrate the compressor drive into the traction drive to reduce part count by component sharing

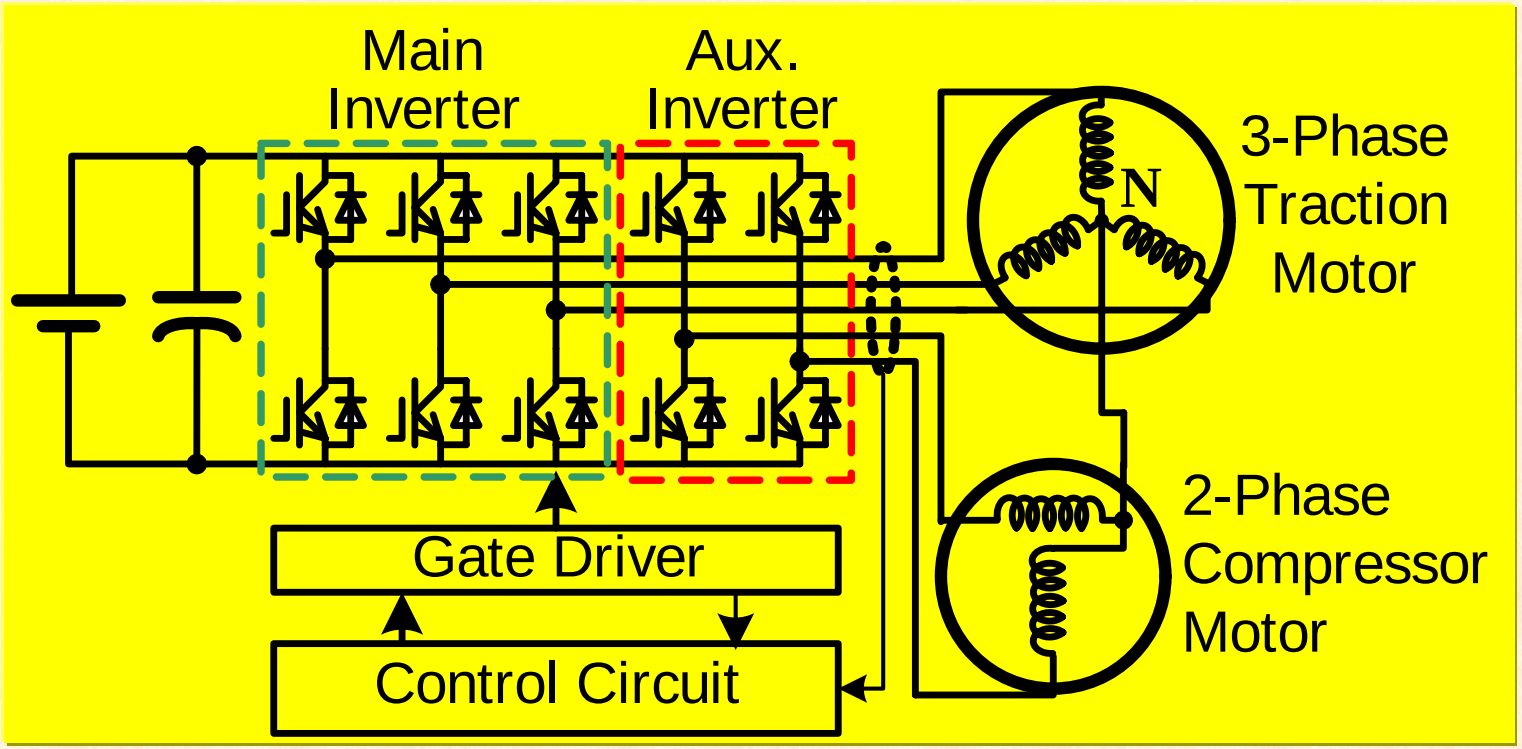

Integrated Dual Inverter

Project Summary (cont'd.)

- **Expected Outcome**
  - An integrated inverter that can reduce the drive system cost by cutting the compressor inverter components count by one-third
  - Control schemes and testing data
- **Timeframe**
  - Both mid-term for HEVs and long-term for fuel cell vehicles
- **Relation to FreedomCAR and Other Projects**
  - ORNL thermal management project - floating loop
  - Reduce FreedomCAR system level cost
- **Funding**
  - $380K

Objectives

- **Objective and Goal**
  - Produce inverter hardware and analysis that will enable quantitative evaluation of integrated inverter's ability to meet FreedomCAR needs
  - Develop integrated power conversion topologies for motor drives to reduce the size and cost of power electronics systems for FCV/HEV traction and accessory drives
- **HVAC compressor drive is not included in the FreedomCAR 2010 targets and goals. This project addresses the compressor drive's**
  - Cost, more than a 30% reduction
  - Size, a 30% reduction

FY 2004 Progress/Results

- **Progress since June 2004 review**
  - Rewound a three-phase 3 hp induction motor into a symmetrical two-phase motor
  - Completed system testing with the symmetrical two-phase motor

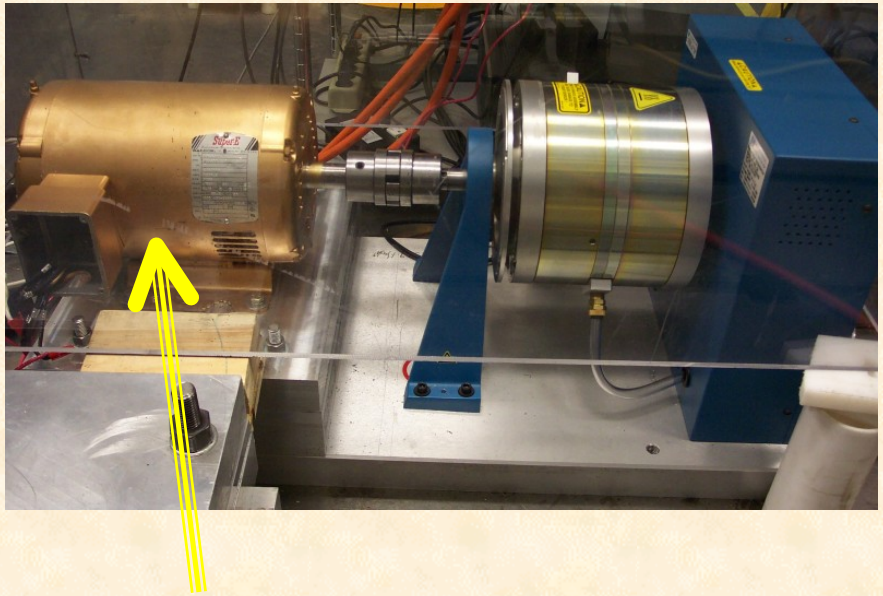

Rewound 3 hp two-phase motor

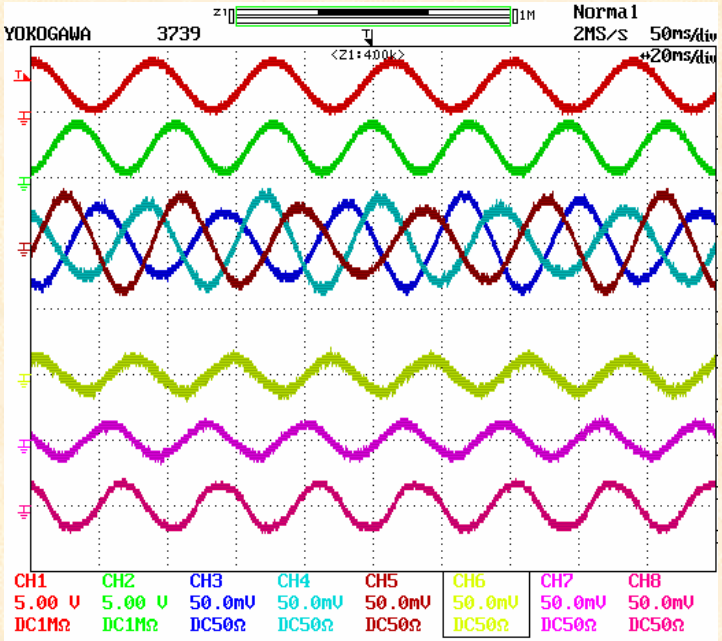

v_{um}
v_{am}

i_u, i_v, i_w: 50A/div

i_a
i_b
i_N
50A/div

Main motor: 85 N·m, 550 rpm
Two-phase motor: 11 N·m, 1000 rpm

FY 2004 Progress/Results (cont'd.)

Accomplishments

- Completed simulation study
- Fabricated a prototype inverter
- Rewound a symmetrical two-phase induction motor
- Completed system testing on induction motors

- **All milestones for FY 2004 were met**

FY 2005 Plan

- **Major Tasks**
  - Design, build, and test inverter prototype for dual PM motor drive, 75 kW / 5 kW, utilizing the latest trench-gate IGBTs
  - Develop position sensorless technology for two-phase PM motor control
- **Expected Progress/Results this Year**
  - Simulation study on sensorless technology for two-phase PM motor control, 02/28/05
  - Simulation study on the integrated inverter for dual PM motor drive, 03/31/05
  - Integrated inverter test results with PM motors, 09/30/05
- **Milestones and Schedule**
  - Integrated inverter test results with PM motors, 09/30/05

FY 2005 Progress to Date

- **First Quarter Progress**
  - Purchased and received a 8kW/2000rpm PM motor
  - Purchased and received a 5.5kW/4000rpm PM motor (to be rewound into a two-phase motor)

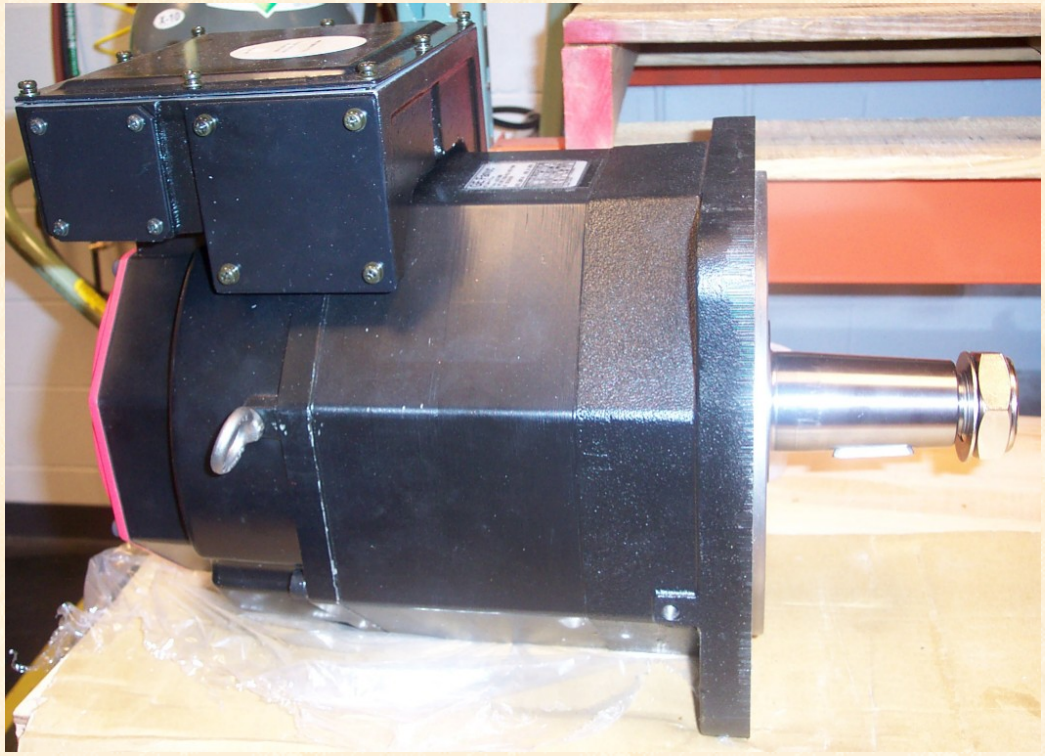

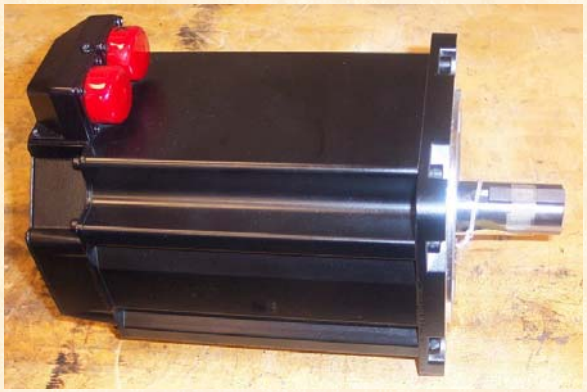

FY 2005 Progress to Date (cont'd.)

- **First Quarter Progress (cont'd.)**
  - Purchased and received three six-pack IPM modules from Powerex – latest trench gate 600V/600A IGBTs
  - Started simulation work on the position sensorless control of the two-phase motor
  - Started DSP board design
- **No delays or changes in the execution plan**
- **Major Technical Accomplishments and Milestones**
  - Two-phase PM motor simulation model
  - Three-phase PM motor model
  - No milestones planned during the 1st quarter

Future Plans Beyond FY 2005

- **Continue development of topology and control technology for increasing PM motor power density**
- **Continue integration of power electronics system including inverter, dc/dc converter, and energy storage devices for fuel cell powered vehicles**