Depleted Uranium (DU) Uses Research and Development (R&D) Project

M. Jonathan Haire, PhD
Nuclear Science and Technology Division
Oak Ridge National Laboratory
Phone: (865) 574-7141
E-mail: hairemj@ornl.gov

Presented to
Tomio Kawata, Executive Director
Japan Nuclear Cycle Development Institute (JNC)
Washington, D.C. 20585
December 12, 2004

Background

- The United States Department of Energy (DOE) has ≈700,000 metric tons (t) of DUF_6 stored in ≈57,700 steel cylinders at Portsmouth, Paducah, and Oak Ridge sites
- This material has historically been considered a valuable government asset because it could be used as
  - Feed for further enrichment
  - Fertile material to create plutonium for nuclear fuel in fast breeder reactors
- The strength of the argument that this is a valuable material has been eroding with time

Paducah Gaseous Diffusion Plant

Disposal Costs

- Current cylinder management activities cost $~15M/year
- The objective of DOE's contract (total value $562M) with Uranium Disposition Services LLC is to convert DUF_6 to a ". . . Stable form acceptable for transportation, beneficial use/reuse, and/or disposal." Storage is not an option
- The Record of Decision (ROD) (July 2004) for Construction and Operation of DUF_6 Conversion Facility at Paducah, Kentucky, says " . . . DOE plans to decide the specific disposal location(s) for the depleted U_3O_8 conversion product after additional National Environmental Protection Agency review."
- Packaging, transportation, and disposal costs at a near surface (e.g., Nevada Test Site) site will be $0.2–0.4B

Drivers for DU Use R&D

- **Compliance agreement with Ohio Environmental Protection Agency**
  - **Still in force; requires R&D effort and annual report**
- **Legislation: Public Law 105-204**
- **DOE's final plan for DUF_6 conversion**
  - **Plan explicitly includes reuse**
- **NEPA ROD**
  - **DU will be used as much as possible**
- **Cost avoidance**
  - **$170M–$1560M depending on disposal uncertainties**
- **Support Russian collaboration**
  - **Top-level commitment, need corresponding US program**

Potential Beneficial Uses

1. **High Volume Uses Consume the Entire DU Inventory**
   - **Repository**
     - **Backfill, invert, waste package fill, waste package cermet**
   - **Shielding applications**
     - **U.S. market 150 casks/year**

The DUCRETE cask is 35 tons lighter and 100 cm smaller in diameter than casks made from ordinary concrete.

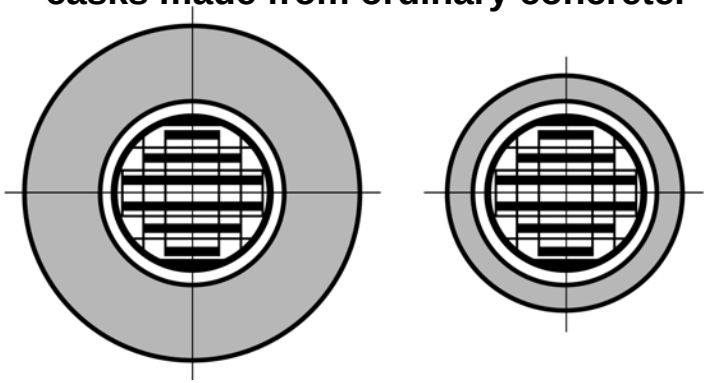

Comparison of conventional and DUCRETE spent-fuel dry storage casks

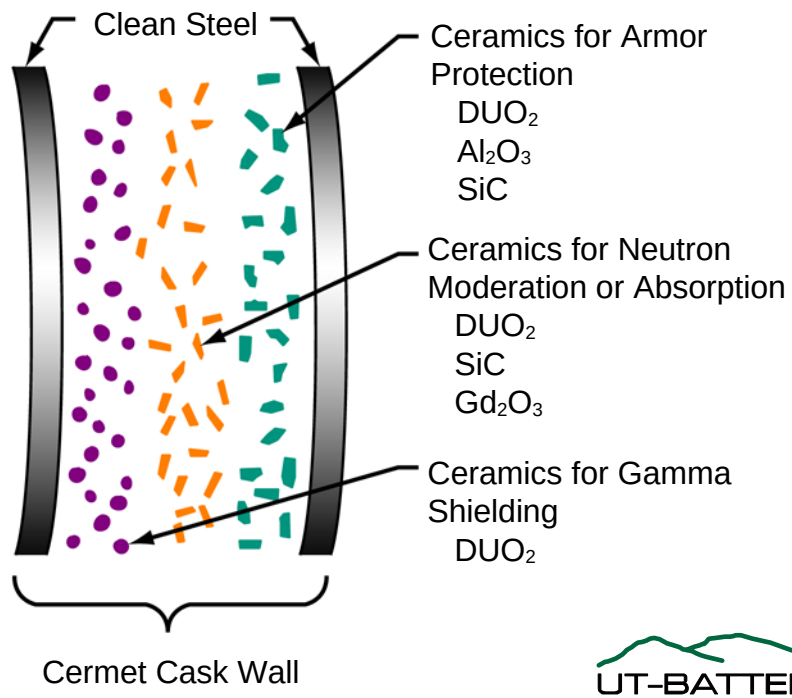

Potential Beneficial Uses *(continued)*

2. High Value Uses:

A niche in one of these markets could fund the entire DU Disposition Program

- **Catalysts**
  - **the U.S. market is ~$9 B/year**
- **Semiconductors**
  - **U.S. market ~$0.05 B/year from sale of DU**
- **Fuel cells**
  - **U.S. market ~$12.5 B/year**
- **Hydrogen production**
  - **U.S. market ~$2.5 B/year, growing at ~10%/year**

Research Concerning High Value Uses was Terminated October 1, 2003 Because of Lack of Funding

Strategy

- Project funding driver is now the Russia collaboration and having a corresponding DU Uses R&D Program in the U.S.
- Strategy: Russia will conduct “hands-on” experiments and product development tests. U.S. analyses will use Russian experiment and test data
- Private industry (Holtec International) will commercialize R&D DU application products

High-Volume, Low-Value

- Repository applications
- Spent Nuclear Fuel (SNF) casks
  - Heavy concrete (DUAGG → DUCRETE)
  - DU-steel cermet material

Benefits

- Any of these applications could use most or all of the DU inventory and avoid transportation and disposal cost: $240–$1560M
- In geologic repository, there is potential to eliminate titanium drip shield and alloy-22 sheath estimated to cost ~$5B

DU Oxide Fill for Repository Waste Packages (WPs)

Background and Objectives

The beneficial use of DU dioxide (DUO_2) fill in repository applications is being investigated as a method to dispose of excess DU. These applications could potentially use the entire inventory of excess DU. The fill may be incorporated into the repository as (1) a particulate fill material to fill void spaces in the WP—including the spent nuclear fuel (SNF) coolant channels or (2) a component of the invert. The invert is the support structure for the WP in the repository disposal tunnels.

- ***Nuclear criticality*. The DU reduces the probability of nuclear criticality over geological time by isotopic dilution of SNF enriched uranium with the DU**
- ***Chemically reducing conditions*. The DUO_2 fill helps maintain chemically reducing conditions near the SNF as the WP degrades—slowing long-term SNF degradation**

DU Oxide Fill for Repository Waste Packages (WPs) (continued)

- ***Reduced groundwater flow*. The DUO_2 fill may reduce groundwater flow through the degraded WP and thus reduce radionuclide transport from the WP. The DUO_2 evolves in air or oxidizing groundwater to hydrated higher uranium oxides that have lower densities than do the initial UO_2 particulates. The growth of hydrated uranium oxides blocks flow channels and slows water flow through the WP**
- ***Adsorption and filtering*. DU oxides in all applications may slow the migration of radionuclides in groundwater by (1) ion-exchange and absorption of selected radionuclides and (2) filtering of radioactive colloids from groundwater**

Status

This work has been terminated because of the politics of licensing Yucca Mountain Repository

High-Volume, Low-Value: Repository

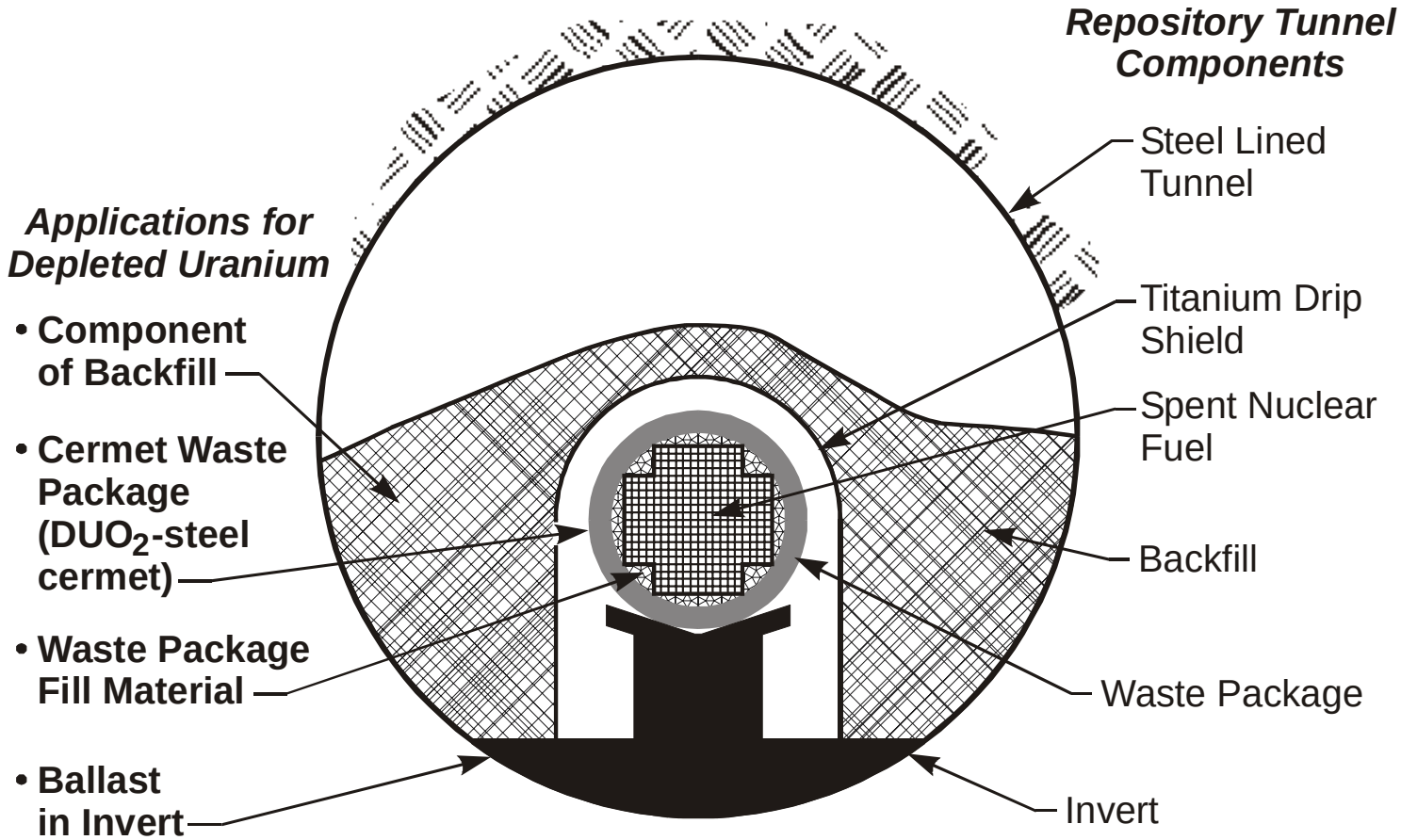

High-Volume, Low-Value: DUCRETE Casks

DUCRETE Casks are Considerably Smaller and Lighter than Casks Constructed of Ordinary Concrete

The DUCRETE cask is 35 tons lighter and 100 cm smaller in diameter than casks made from ordinary concrete.

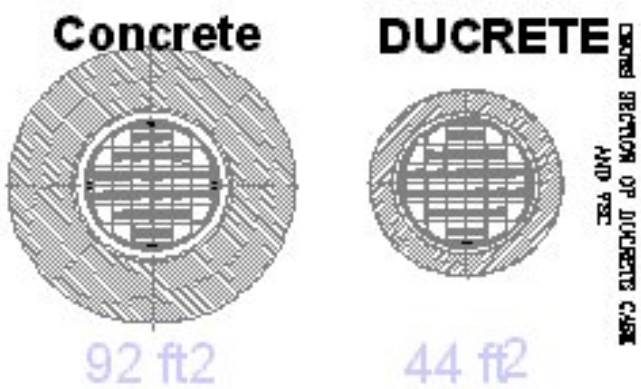

Comparison of conventional and DUCRETE spent-fuel dry storage casks/silos

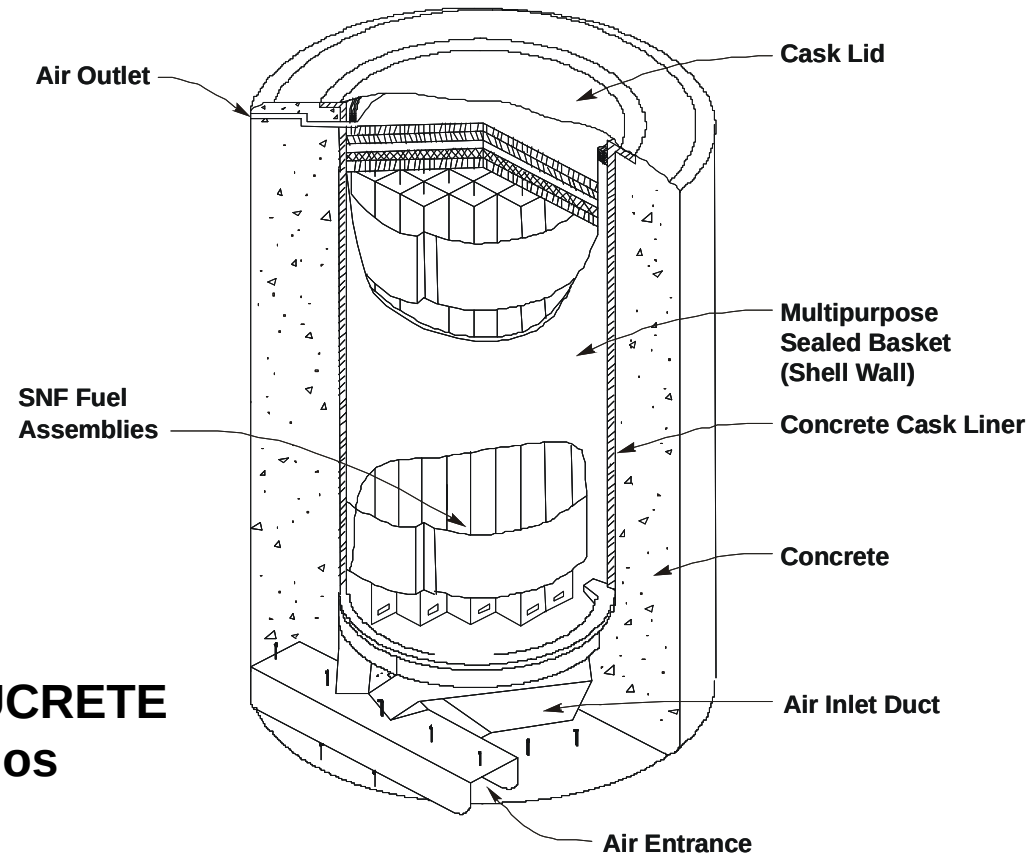

DU-Steel Cermet Casks

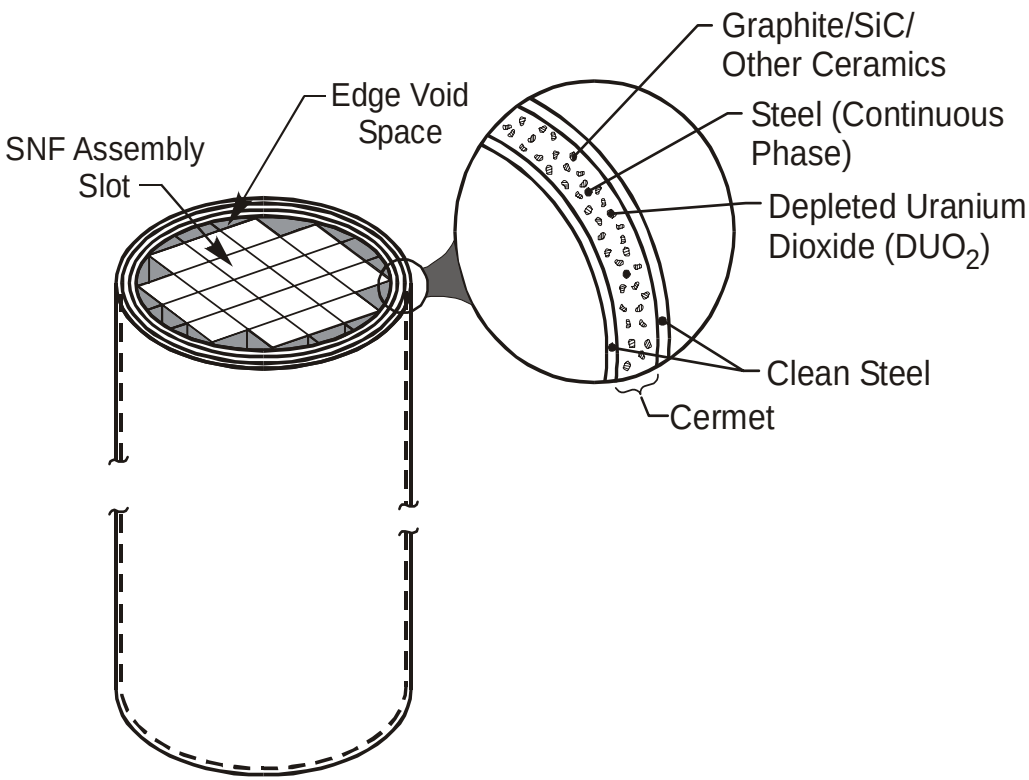

Functions

- Radiation Shielding
  - Gamma: High-Density DUO_2/Other
  - Neutron Moderation/Absorption
    - Oxygen in DUO_2
    - Carbon in SiC and Graphite
- Assault Protection: Multilayer Cermet (Traditional Armor)
  - Ceramic (Al_2O_3, DUO_2, SiC, Other)
  - Metal
- Safeguards and Theft
  - Large Mass
  - Vault Construction: Multilayer Cermet
- Decay Heat Removal
  - High Conductivity Steel Matrix

International Collaboration with Russia

Obtains lower cost or cost shared research results

Task 440: International Collaboration Obtain Lower Cost or Cost Shared Research Results Through Collaboration with Russia

- Meetings with Russians
  - DU review with Russian Academy of Science (RAS), December 2002, Moscow, Russia
  - Review International Science and Technology Center (ISTC) Projects, August 2003, Sarov, Russia
  - Joint Coordinating Committee for Science and Technology (JCCST) Meeting, September 2003, St. Petersburg, Russia
  - DU workshop, Oak Ridge, Tennessee, May 2004
  - Review ISTC projects, October 2004, Moscow, Russia
  - Planned DU workshop, September 2005, Las Vegas, Nevada

- The U.S. Department of State through ISTC funded ($800K over 3 years) three DU projects in Russia

Task 440: International Collaboration Obtain Lower Cost or Cost Shared Research Results through Collaboration with Russia (continued)

- DOE-EM funds a DU project with RAS ($105/yr for 4 years). DOE-EM has asked for a proposal for a second Russian project

- A proposal has been submitted to ISTC (i.e., U.S. Department of State) to fabricate and test a ¼ scale DU-steel cermet transport cask (~$1M)

- We have submitted a proposal to DOE through IPP program to fabricate and test a ¼ scale DUCRETE storage cask

Russian Grand Idea

- The Russians will propose at the JCCST meeting next spring to:

  "Ship U.S. depleted uranium to Russia where Russia will fabricate next generation spent nuclear fuel storage and transport casks for the U.S."

Task 520: Management Development and Implement Strategy for Beneficial Uses of DU

- DOE and RAS signed an implementing agreement to collaborate on research concerning the beneficial uses of DU, September 2003. Oversee the work of ~50 scientists and engineers in Russia

- Hold workshops on the beneficial uses of depleted uranium

- Lead team visits to Russia to conduct technical review of DU projects

Task 520: Management Development and Implement Strategy for Beneficial Uses of DU (continued)

- Oversee a Cooperative Research and Development Agreement with Holtec to collaborate on DUO_2 use as a material of construction of next generation casks

- Future DU workshops: Plan DU project review with Russian colleagues in U.S., September 2005 (will need additional funding for this)

Backup Slides

Russian Academy of Science proposals to DOE resulting from the JCCST meeting in St. Petersburg, Russia September 24, 2003

FUNDED
Russian Proposal #1: Production of Granulated DUO_2 Particles by Melting in Induction Cold Crucible Melter (ICCM)

Objective: Develop a single step process for inexpensive fabrication of UO_2 particles of varying size that could be the aggregate in heavy concrete and the ceramic constituent of DU-steel cermets

- **Present particle fabrication is multi-step, thus expensive**
- **Use of an ICCM would enable using product (U_3O_8) of DUF_6 conversion plant directly**
- **Use of ICCM removes impurities, e.g., Fl**
- **Funding: $105K/year for 4 years**

Asked for Another Proposal

Russian Proposal #2: The Use of DUO_2 as a Geochemical Barrier in Spent Nuclear Fuel Repository to Reduce Radionuclide Release

Objective: Provide the technical basis for disposal of entire inventory of DOE DU surplus material in geologic repository to enhance repository performance

- **Measure the permeability of DUO_2 particles during and after oxidation. Particle swelling prevents or delays groundwater flow and air diffusion to the waste package**
- **Measure the interaction between DUO_2 and repository materials**
- **Such a Richard's barrier could replace the titanium drip shield ($5B) in the repository**
- **DUO_2 provides a chemically reducing environment, better nuclear criticality control, etc., in a repository**
- **Funding: $120K/year for 4 years**

Rejected
Russian Proposal #3: Develop Cementitious Materials Compatible with Yucca Mountain (YM) Geochemistry

Objective: Develop and test cements to be used in YM construction of inverts, tunnel liners, etc., that are compatible with YM geochemistry

- **Cements are prohibited from YM now because of high pH levels. This denies YM of an inexpensive construction material**
- **Research will formulate and make candidate cement materials using high-silica hydraulic binders; test the concrete; investigate the migration of Tc and Np through the concretes.**
- **Funding: $120K/year for 3 years**