Saw Blade Chatter Detection and Correction-- Developing the Smart Tooling Concept for Remote Manipulation

Mark W. Noakes

10th International Conference on Robotics and Remote Systems for Hazardous Environments

March 28-31, 2004

University of Florida Hotel and Convention Center

Gainesville, FL

Outline

- Background/the problem
- Tool chatter --> saw chatter
- Practicalities
- Proposed solution
- Implementation
- The bigger picture --> smart tooling
- Summary
- NO RESULTS YET

Lessons Learned from CP-5

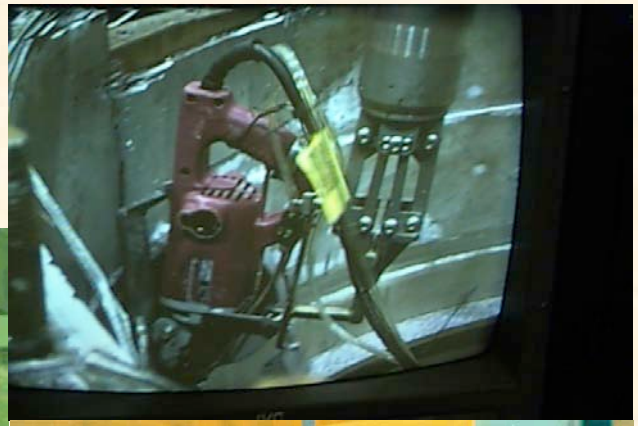

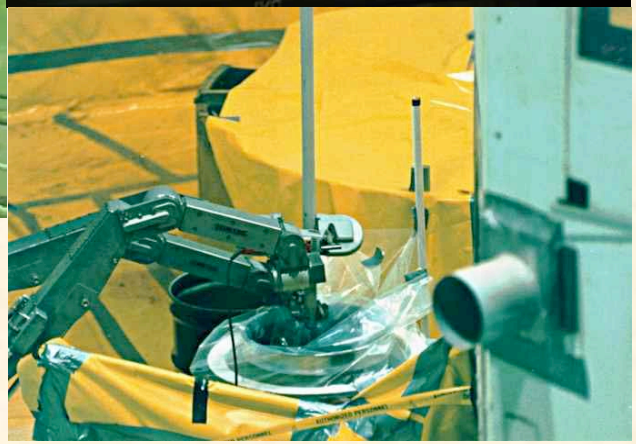

Tool Chatter --> Saw Chatter

- **Definitive source:** S. A. Tobias. Machine-Tool Vibration. Blackie & Son Ltd., Glasgow, Great Britain. 1965.
- **Much work done on milling tool chatter**
- **Not much done on saw blade chatter**
- **Models tend to be simplistic**
- **Solutions tend to be heuristic:**
  - **Beef up machinery as much as possible**
  - **Vary the rate of cut**

Practicalities

- Chatter of individual saw teeth occurs at high frequency
- Available manipulator control system at low frequency
- Selected saw “chatter” (oscillation) rather than individual saw tooth chatter
- Equipment as available

Implementation

- **Chatter detection via ratio of variances of high and low frequency components**

$$R = \left(\frac{\sigma_{low}}{\sigma_{high}} \right)^2 = \frac{\sigma_{low}^2}{\sigma_{high}^2}$$

$$\sigma^2 = \frac{1}{n-1} \sum_{i=1}^{n} \left(x_i - \bar{x} \right)^2 \qquad \bar{x} = \frac{1}{n} \sum_{i=1}^{n} x_i$$

Implementation

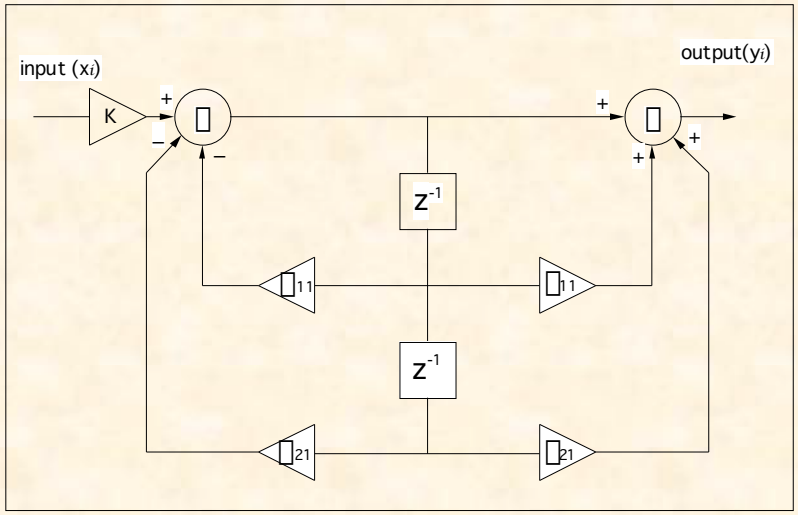

$$H(s)_{LPF} = \frac{1}{s^2 + \sqrt{2}s + 1}$$

$$H(s)_{HPF} = \frac{s^2}{s^2 + \sqrt{2}s + 1}$$

$$H(s) = \prod_{n=1}^{N} \frac{a_{2,n}s^2 + a_{1,n}s + a_{0,n}}{b_{2,n}s^2 + b_{1,n}s + b_{0,n}}$$

$$C_W = \frac{f_s}{\pi} \tan\left(\frac{\pi f}{f_s}\right)$$

$$H(z) = K \prod_{n=1}^{N} \frac{1 + \alpha_{1,n}z^{-1} + \alpha_{2,n}z^{-2}}{1 + \beta_{1,n}z^{-1} + \beta_{2,n}z^{-2}}$$

$$s = 2f_s \frac{1 - z^{-1}}{1 + z^{-1}}$$

Coefficients:

$$\alpha_{1,n} = \frac{-8a_{2,n}f_s^2 + 2a_{0,n}}{4a_{2,n}f_s^2 + 2a_{1,n}f_s + a_{0,n}}$$

$$\alpha_{2,n} = \frac{4a_{2,n}f_s^2 - 2a_{1,n}f_s + a_{0,n}}{4a_{2,n}f_s^2 + 2a_{1,n}f_s + a_{0,n}}$$

$$\beta_{1,n} = \frac{-8b_{2,n}f_s^2 + 2b_{0,n}}{4b_{2,n}f_s^2 + 2b_{1,n}f_s + b_{0,n}}$$

$$\beta_{2,n} = \frac{4b_{2,n}f_s^2 - 2b_{1,n}f_s + b_{0,n}}{4b_{2,n}f_s^2 + 2b_{1,n}f_s + b_{0,n}}$$

$$K = \prod_{n=1}^{N} \frac{4b_{2,n}f_s^2 + 2b_{1,n}f_s + b_{0,n}}{4a_{2,n}f_s^2 + 2a_{1,n}f_s + a_{0,n}}$$

Adaptable Saw/Sensor Tool

gripper block

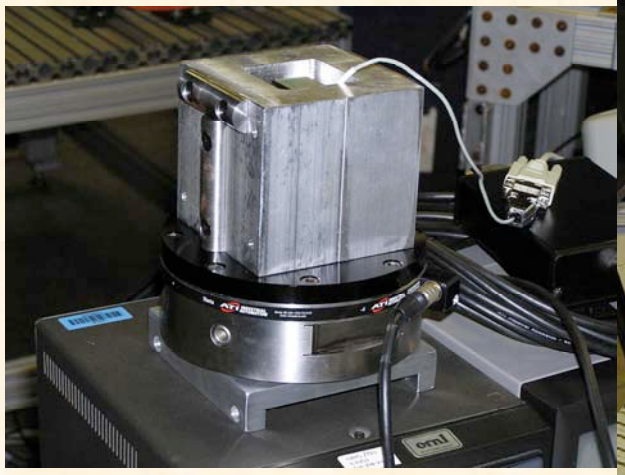

accelerometer
force/torque
sensor

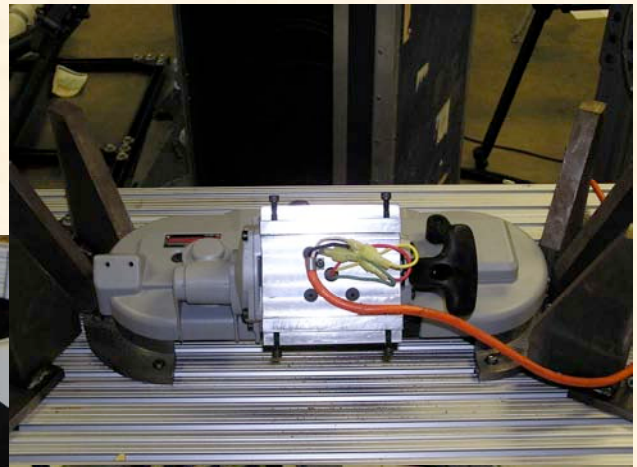

2 piece
tool block
permits
tool swap

tool
sensor
package

UTK Robotics Laboratory

Schilling and mockup

Robot Task Space Analyzer (RTSA)

Tool and tool stand

The Bigger Picture--Smart Tooling

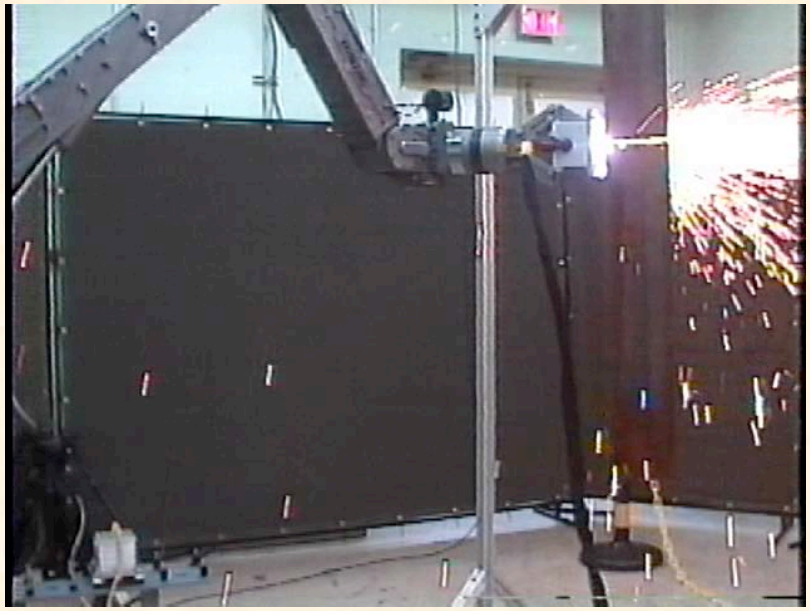

- Started under ORNL EM D&D Robotics
- Sensor tool plus plasma torch tool to build a map based on real task
- No graphical task modeling; direct sensor to task path generation
- Graphical preview via Roboworks
- No “tweaking” necessary for calibration; it worked the first time
- Telerobotic, not autonomous, but it got the task done

Summary

- GOAL = Saw chatter reduction for Telerobotic manipulators
- Proposed solution based on separation of signals via filtering
- Hardware and software solutions ready for testing
- Testing is NOT complete at this time
- The bigger picture is smart tooling…stay tuned…