The LAJ Cycle: An Innovative and Very High Efficiency Fuel Cell-Turbine Hybrid Power Generation Cycle

Roddie R. Judkins,[1] Timothy R. Armstrong,[2] and Solomon D. Labinov[3]
Oak Ridge National Laboratory
Oak Ridge, Tennessee 37831

[1]Fossil Energy Program
[2]Energy Efficiency and Renewable Energy Program
[3]Engineering Science and Technology Division

Abstract

Oak Ridge National Laboratory (ORNL) has developed a novel system concept for combined-cycle power generation called the LAJ cycle. This system could serve as a basis for the development of a new generation of high-efficiency combined cycles. In one of several possible configurations of the new combined-cycle fossil fuel power system, natural gas enters the system at 4.0 MPa and about 300 K, is heated and reformed, and is transferred to a turbine where the gas is expanded to 0.6 MPa and 800 K, and then flows successively to heat exchangers and a condenser-separator, after which it is separated into two gas streams, one containing principally CO with some CH_4 and water vapor and the other containing pure H_2. The CO and H_2 flow to separate fuel cells and undergo electrochemical oxidation with the concomitant production of electricity. Separate streams of water and carbon dioxide (CO_2) are produced, making this cycle compatible with carbon mitigation strategies based on sequestration. Model calculations indicate combined-cycle efficiencies greater than 70% based on the lower heating value of natural gas. The high efficiencies realized result from a combination of the high-pressure natural gas reformate expansion and the highly efficient CO and H_2 fuel cells. Most of the power derives from the fuel cells in the system.

Introduction

Combined cycle power systems (a combination of two or more power generation cycles in a single system), especially gas turbine-steam turbine combinations, operating on fossil fuels have been under development for several years. Hybrid systems are those combined cycle systems that use different power generation concepts such as a combination of turbines with fuel cells to generate electricity. The basic technological process of all the proposed gas turbine-fuel cell hybrid systems includes processing fossil fuels such as natural gas, coal, or heavy hydrocarbon mixtures (petroleum products) into a fuel gas (e.g., H_2, CO, light hydrocarbons, C_1 or C_2) suitable for use in fuel cells. The electrochemical conversion that occurs also releases heat. [1] An appropriate system configuration may utilize this waste heat and may be used to produce supplemental power from gas and/or steam turbines in Brayton or Rankine cycles, respectively. These systems are designed to increase the efficiency of fuel energy conversion to electricity and to reduce emissions (NO_x, CO, CO_2) to the environment. Cogeneration and combined-cycle system approaches can increase the efficiency by more than 20 percentage points compared with that of conventional power systems. [2]

Several cogeneration and combined-cycle power systems of various configurations have

been developed that achieve very high efficiencies. Numerous natural gas combined cycle (NGCC) systems (combined gas turbine-steam turbine cycle) are in service and achieve efficiencies as high as 58 to 60% based on the lower heating value of natural gas. The U. S. Department of Energy recently completed a 7-year development effort aimed at improving the efficiencies of NGCCs to 60%. This was a very successful development program, and technologies based on it are now in the commercial marketplace. Currently, 60% efficiency is about the practical limit for these systems based on limitations of the high temperature materials. Integrated coal-gasification combined cycles achieve about 42% efficiency. [3]

Combined-cycle systems based on fuel cells in combination with gas turbines are of considerable interest because of the potential for even further improvements in efficiency and reductions in emissions. The LAJ (for Labinov, Armstrong, and Judkins) Cycle, invented by researchers at Oak Ridge National Laboratory, is capable of achieving very high efficiency performance as well as a minimization of emissions. The cycle uses fuel cells as the principal power generation devices and uses the waste heat from the fuel cells for turbine power generation. Fuel utilization is very high. This cycle is adaptable to the use of natural gas or coal-derived synthesis gas (syngas) as fuels. It is well suited to integration into a carbon-mitigation strategy involving separation, capture, and sequestration (isolation from the environment) of carbon dioxide.

The LAJ Cycle and a static model that was developed and applied to the LAJ Cycle are presented in this paper. The results of the model evaluation indicate efficiencies of about 70 to 80%. This cycle, though new, does not depend on additional invention or discovery to develop an operating system based on it, although system improvement opportunities are discussed. A description of one configuration of the LAJ Cycle is presented first; then, the critical elements of the system are discussed. Finally, a discussion of the static model that was used to evaluate the system performance potential is presented. Considerably more detail on the LAJ Cycle and the static model, as well as a dynamic model that was also developed on this project, are provided in a previously published series of papers. [4-6]

Description of the LAJ Cycle

Several configurations are possible for the LAJ Cycle. Figure 1 provides a schematic diagram of one configuration. The power generation components of this configuration include three gas turbines, a solid oxide fuel cell (SOFC) fueled with carbon monoxide, and a second fuel cell fueled with hydrogen, which may be of any of several types (e.g., phosphoric acid, molten carbonate, or solid oxide). Henceforth, these fuel cells will be referenced according to the fuel used (i.e., CO or H_2). In this configuration, natural gas is fed from a pipeline to the system at 4.0 MPa and 300 K. [7] The gas is heated by heat exchanger **H4** and enters the steam reformer **R** at 1200 K and 4.0 MPa. Water from pump **P** enters heater **H1** at 4.0 MPa and 400 K and, after heating, flows through heat exchanger **H2** and thence to steam generator **H3**. The steam at 4.0 MPa and 1200 K goes to steam reformer **R** and reacts with natural gas to form synthesis gas. The synthesis gas is then transferred to gas turbine **GT3**. The gas expands in the turbine to 0.6 MPa and

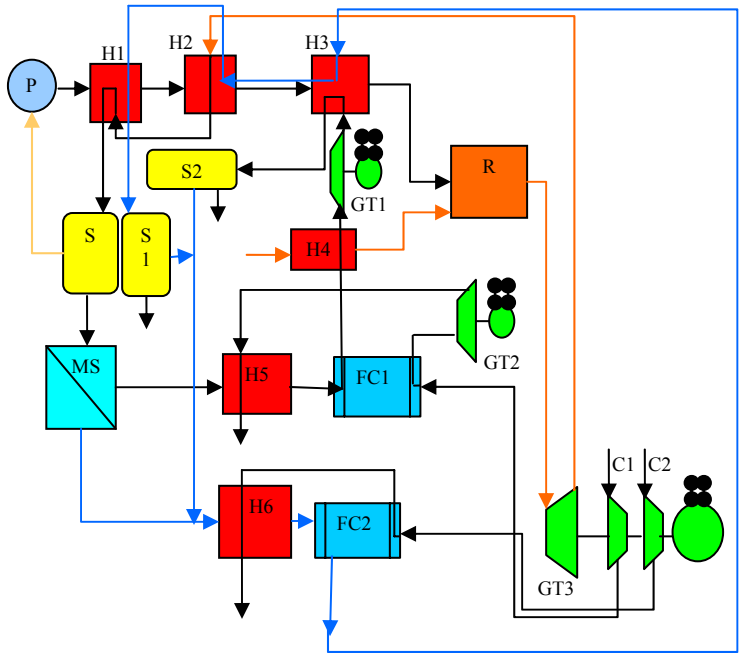

Fig. 1. Schematic diagram of one configuration of the LAJ Cycle

800 K and then flows successively to heat exchangers **H2** and **H1**. From heat exchanger **H1**, the gas, at 450 K and 0.6 MPa, is fed to the condenser-separator **S**. Condensate flows to pump **P**, and the gas stream is separated into two streams by a membrane separator, **MS**, device. A stream containing CO, CH_4, and water vapor flows from the membrane separator to heat exchanger **H5** at 0.6 MPa and 400 K. The heated gas goes to the CO fuel cell **FC1**, where it undergoes an electrochemical oxidation and then, at 0.6 MPa and 1300K, flows to heater **H4**. From heater **H4**, the gas flows to turbine **GT1** and expands to 0.1 MPa. On exiting the turbine, the hot gas passes steam generator **H3** and goes to the condenser-separator **S2**. At **S2**, condensation of the vapor occurs, and a shift reaction takes place, resulting in the formation of CO_2 and H_2. The solution of CO_2 in water is collected for sequestration and the H_2 is combined with a second stream from the membrane separator, which contains pure hydrogen, and the combined stream flows to heater **H6** at 0.1 MPa.

After heating to 1300 K, the hydrogen is transported to the H_2 fuel cell **FC2**. After electrochemical oxidation, the hot gases containing water vapor and hydrogen at 1300 K flow in succession to units **H3**, **H2**, and **H1**. The chilled gas flows to condenser-separator **S1**. The condensed water from **S1** may be collected and used, and the hydrogen is recycled to the fuel cell. The oxidant for the fuel cells (oxygen) is fed from compressors **C1** and **C2** at high and low pressures, respectively. The heated air from the H_2 fuel cell **FC2** flows to heater **H6** and the heated air from the CO fuel cell **FC1** flows to turbine **GT2**, and thence to heater **H5**.

In this configuration, the gas turbines produce approximately 13% of the total system

power; the CO fuel cell produces approximately 40%; and the H_2 fuel cell produces approximately 47%. Thus, the system takes advantage of the very high-energy efficiencies of electrochemical conversion and utilization of waste heat to maximize power generation and electricity generation efficiency.

The Fuel Processor

The primary fuel for the LAJ Cycle may be any fuel that can be reformed (i.e., converted to synthesis gas, a mixture of CO and H_2). For methane (CH_4) or natural gas, catalytic steam reforming was the approach considered here. In the case of methane fuel, the formation of synthesis gas proceeds according to the following equation:

$$CH_4 + H_2O \leftrightarrow CO + 3\ H_2,$$

The reaction occurs in the reformer at 1200 K and 4.0 MPa. Synthesis gas may be produced from coal via a coal-gasification process in which coal is partially oxidized in a steam-air or steam-oxygen environment. If CH is used to represent the composition of coal, the gasification reaction proceeds according to the equation:

$$2\ CH + O_2 \leftrightarrow 2\ CO + H_2.$$

Steam reforming of natural gas and gasification of coal are well-established and commercial processes for producing synthesis gas. For example, numerous natural gas reformers are in service in refineries to produce the hydrogen required for hydrotreating petroleum. Typical production capacities may be on the order of 35 million standard cubic feet of hydrogen per day. These plants are also in use worldwide both for commercial production of hydrogen (so-called "merchant hydrogen"). Coal gasification is now a worldwide technology. The primary commercial use is for fuel and chemical production, but most current development activities are directed to integrated gasification combined cycle (IGCC) systems. These coal-gasification systems are not yet used extensively for hydrogen production, but they are widely considered to be excellent approaches to the clean use of coal.

Regardless of the formation process, the synthesis gas mixture provides the motive force for the turbine, **GT1**, and, on separation of the mixture into its constituent parts, the fuels for the CO and H_2 fuel cells. [8]

Separation of Synthesis Gas into CO and H_2

Although other techniques could be employed for the separation of the synthesis gas, a high-temperature approach using inorganic membranes was used here. [9] These membranes have operated at temperatures up to 873 K. Separation occurs through molecular transport. Membranes for the separation of hydrogen from synthesis gas have apparent pore diameters of <2.0 nm and may be as small as 0.5 nm. Their small pore size notwithstanding, these membranes can achieve very high fluxes or permeance. At about 623 K, the hydrogen permeance of these inorganic membranes has been determined to be about 0.1 standard cubic centimeters per minute per square centimeter of surface area per centimeter of mercury (or 0.0013 MPa) hydrogen partial pressure differential. The

membranes, though not yet commercialized, are manufactured using scalable techniques.

The Parsons Infrastructure & Technology Group Inc. has developed a conceptual hydrogen-separation device based on these porous inorganic membranes. [10] Table 1 presents information on the baseline and two revised designs of the hydrogen- separation device. These devices are intended to process approximately 35,000 lb/h of hydrogen. Parsons has estimated the cost of fabrication of the membranes at about \$1,100/m^2.

Table 1. H_2 separation device designs[a]

Device design	Baseline	Revised	Revised
Operating temperature (°C)	761	600	300
H2 production			
Rate (kg/h)	15,969	16,285	16,585
Temperature (°C)	761	600	300
Synthesis gas inlet conditions			
Flow rate (kg/h)	310,257	310,257	310,257
Pressure (MPa)	6.895	6.895	6.895
Temperature (°C)	513	318	207
Flow rate (m^3/s)	5.78	4.90	3.20
Membrane area			
Minimum (m^2)	3,271	3,335	3,397
Increased ~25% (m^2)[b]	4,181	4,181	4,181
Vessel ID (m)	2.4384	2.4384	2.4384
Tube dimensions			
OD (mm)	15.875	15.875	15.875
ID (mm)	12.7	12.7	12.7
Preliminary length (m)	8.84	8.84	8.84
Tubes per vessel	11,800	11,800	11,800
Gas velocity through tubes (m/s)	3.87	3.29	2.13
Gas retention time (s)	2.3	2.7	4.1
Reynolds number	~19,000	~22,500	~28,000
Number of vessels	3	3	3
Configuration of tube bundle (m)	8 × 3	8 × 3	8 × 3
Flow arrangement	Series	Series	Series

[a]Adapted with permission from Michael Rutkowski, the Parsons Infrastructure & Technology Group Inc [10].
[b]Membrane area increased to meet design specifications.

These data suggest that a hydrogen-separation device based on these inorganic membranes would be highly efficient and compact. It would be capable of providing all the high-purity CO and H_2 required for fuel cell operation at minimal costs.

The CO and H_2 Fuel Cells

For the purposes of this discussion, SOFCs are considered for both the CO and H_2 fuel cells, although the H_2 fuel cell may be of any type. SOFCs are essentially all-ceramic power-generating devices that use air (or oxygen) and fuel flows to generate electricity

and heat. Ceramic structures allow the SOFCs to operate at very high temperatures (i. e., about 1273 K), which is much higher than the operating temperature of most other fuel cells. At this temperature, autothermal reforming of hydrocarbon fuels occurs at the surface of the fuel cell anode, primarily to form CO and H_2, which in turn are electrochemically oxidized with the concomitant production of electricity. These, then, are the ultimate fuels for this fuel cell. Although SOFCs operate quite efficiently on hydrocarbon fuels, particularly methane, considerable efficiency improvements may be realized if essentially pure CO and/or H_2 are used as fuels. Thus, the concept here is to produce CO/H_2 mixtures external to the SOFC, separate those mixtures into their primary constituents, CO and H_2, and then supply the pure gas streams separately to fuel cells adapted to electrochemically oxidize the respective pure gases. The oxidant for the fuel cells is oxygen in air, air enriched in oxygen, or pure oxygen.

SOFCs operating on CO as fuel have a theoretical efficiency of 69% at 1000 K. The product of the electrochemical oxidation of CO is a mixture of gases consisting of CO, CO_2, and H_2O at 0.6 MPa and 1300 K, which is used to drive a turbo-expander for producing additional electricity. The outlet stream from the turbo-expander goes to a condenser-separator where a shift reaction takes place. After H_2 is released, a mixture of CO_2 and H_2O remains. Thus, one of the important features of the LAJ Cycle is the production of an essentially pure stream of CO_2, which can be separated, further upgraded in purity if required using conventional techniques, compressed if needed, and integrated into a CO_2 sequestration scheme.

The H_2 fuel cell may be of any of several possible types, such as alkaline, polymer electrolyte membrane, or solid oxide. For the static model analysis, an SOFC was considered. Just as the CO fuel cell operates much more efficiently by using a pure fuel, the H_2 fuel cell operates much more efficiently when pure H_2 is used as the fuel. SOFCs provide simple output adjustment. Thus, power systems based on the LAJ cycle provide the capability to adapt quickly to changes of external load without a significant decrease in efficiency. Through the convenient adjustment of air (or oxygen) and fuel flows, fuel cells can be easily adjusted for changing demands for electricity by boosting output when necessary, then cycling down output when demand is reduced.

Fuel cell materials and designs have resulted in the development of SOFC configurations that have the capability of achieving very high fuel utilization (i.e., a very high percentage of fuel fed to the device reacts electrochemically). Up to 90% or more of the fuel fed to SOFC stacks can be utilized, resulting in theoretical efficiencies of 70%. [11] Table 2 provides characteristics of the different types of fuel cells that may be utilized in the LAJ Cycle. All of the fuel cell types can achieve very high efficiencies when run on H_2, as indicated in Table 2.

Table 2. Characteristics of various types of fuel cells

Fuel Cell Type	PEM	Alkaline	PAFC	MCFC	SOFC
Electrolyte	Polymer	Potassium hydroxide	Phosphoric acid	Molten carbonate salt	Y-stabilized zirconia
Operating temperature (°C)	50-90	50-100	160-220	650	800-1000
Fuels	H_2	H_2	H_2	H_2	H_2, CO, CH_4, C_4H_{10}
Reforming	External	External	External	External/ internal	External/internal
Efficiency (HHV)	50-60	50-70	55	55-65	55-65

The oxygen required for fuel cell operation may be supplied from an oxygen-containing gas, such as air or oxygen-enriched air, or from substantially pure oxygen. The oxygen containing gas is preferably preheated before being supplied to the fuel cells. Even though the reformer uses water in the reforming process, the overall cycle is a net water producer, and, thus, does not require an external source of water. For example, a 1 MW system can produce a net of approximately 10 tons of water each day. Approximately one third of the water formed in the cycle can be heated and fed to the reformer. The balance of water is available for consumers or discharge as a clean waste. Depending on the purpose and conditions of application, the proposed basic configuration may be modified to achieve certain improved characteristics.

Models of Basic Functional Components

This section presents the various elements of the static performance model that were used to evaluate the LAJ Cycle.

Natural Gas Steam Reformer

A natural gas steam reformer was considered to convert natural gas into synthesis gas (CO and H_2). The degree of methane conversion to CO and H_2 depends largely on temperature, pressures and the steam to methane ratio. The mathematical model of the reformer describes the equilibrium conditions in the reformer system with a gas composed of CH_4, CO, CO_2, H_2, and H_2O, and is determined by minimizing the Gibbs free energy. For example, if the Gibbs free energy is minimized with respect to the temperature and pressure of the system, the equilibrium composition of the reaction mixture is determined without accounting for stoichiometric relations.

Fuel Cells

The fuel cell efficiency can be described as:

$$\eta_{fc} = \frac{\text{maximum work}}{\text{change of overall enthalpy}} = \frac{\Delta G}{\Delta H}$$

where ΔG is the change in the Gibbs function and ΔH is the change in enthalpy. At standard temperature and pressure (273 K, 0.1 MPa) the Gibbs function is:

$$\Delta G^o = G_p - G_r = (H_p - H_r) - T(S_p - S_r)$$

$$\Delta G^0 = \sum_p n_j (\bar{h})_j - \sum_r n_i (\bar{h})_j - T_0(\sum_p n_j \bar{s}_j^0 - \sum_r n_i \bar{s}_i^0)$$

where the subscripts p and r stand for the reaction products and reactants respectively. The values of h and s for substances are available as tabulated data. To simplify the calculations, the hydrogen-oxygen fuel cell reactions may be written as:

$$2H_2\,(g) + O_2\,(g) \rightarrow 2H_2O(l)$$

A calculation of the change in the Gibbs function under standard temperature and pressure, by substituting in tabulated values, results in:

$$\Delta G^0 = G_p = (\bar{g}_f^0)_{H_2O(l)} = -237{,}327 \text{ kJ/kg} \bullet \text{mol}$$

remembering that the Gibbs function of an element is zero under standard conditions. The change in enthalpy for the overall fuel cell reaction is: −286,010 kJ/kg•mol. Therefore, the ideal fuel cell efficiency (η) is 0.83 or 83%.

The fuel cell reaction for the carbon monoxide fuel cell is:

$$2CO(g) + O_2\,(g) \rightarrow 2CO_2(g)$$

For this fuel cell, both ΔG and ΔH of the reactants are non-zero: substituting and solving gives –257,405 kJ/kg•mol and –283,161 kJ/kg•mol for ΔG and ΔH, respectively. Therefore, the ideal efficiency for a fuel cell operating on CO is 0.90 or 90%. The fuel cell efficiency can be calculated at other than standard conditions. For the carbon monoxide fuel cell at 1000 K and 0.1 MPa pressure, the change in the Gibbs free energy and the enthalpy are –195,797 kJ/kg•mol and –282,796 kJ/kg•mol, giving an ideal efficiency of 0.69 or 69%.

One approach to increasing the efficiency of the fuel cell is to increase fuel utilization. The multistage fuel cell [U. S. Patent 6,033,794] is an improvement over an earlier concept, often referred to as a "fuel cell network," in which one fuel cell module directs its spent fuel and oxidant streams to heat exchangers that cool these gases sufficiently to use in a second, independent, fuel cell module. [12] These networks were thought to overcome the problem of fuel cells not using 100% of their fuel and oxidant in one pass. Current state-of-the-art fuel cells experience fuel utilization ranging from 75% to 85%. Directed to a second downstream fuel cell, total fuel utilization theoretically could be increased to 93−98%. A key strategy in networked fuel cells is to maximize fuel utilization in each stage.

The multistage fuel cell differs in that all stages are placed in a single module and no heat exchangers are needed between stages to cool the gases. Subsequent stages are simply designed with materials that can accommodate the next-higher temperature regime. Also,

the multistaged concept does not attempt to maximize fuel utilization between stages. Rather, each stage is permitted to operate much underutilized relative to state-of-the-art designs. The ideal number of stages in a multistage fuel cell is a matter of design choice and optimization.

Turbine and Compressor

The basic process of a working fluid state change is assumed to be polytropic and described by the equation:

$$pv^n = C$$

where p is pressure, v is specific volume, n is the polytropic exponent, and C is a constant. The polytropic process work formula is described as:

$$W_t = -\int_1^2 vdp = -m\int_1^2 C^{1/n} p^{-1/n} dp$$

Using the following expressions:

$$C^{1/n} = p_1^{1/n} v_1 = p_2^{1/n} v_2$$
$$\frac{p_1 v_1}{p_2 v_2} = \left(\frac{p_2}{p_1}\right)^{n-1/n}$$

the work of the turbine can be reduced to the simple expression:

$$W_t = \frac{n}{n-1} mRT_1 \left[1 - \left(\frac{p_2}{p_1}\right)^{n-1/n} \right]$$

where m is the number of moles of working fluid and R is the universal gas constant. The turbine losses are estimated with the help of an internal efficiency coefficient η_t, such that the real work of the turbine is $W_{tr}=W_t\ \eta_t$.

Compressor

On the basis of the equation describing a polytropic process, the work of consumption for the compressor is:

$$W_t = \frac{n}{n-1} mRT_1 \left[\left(\frac{p_2}{p_1}\right)^{n-1/n} - 1 \right]$$

and the losses of the compressor are taken into account by an internal efficiency coefficient η_c, so the real work consumed by the compressor is $W_{cr}=W_c\ /\eta_c$.

Heat Exchangers, Separators, and Condensers
Standard mathematical models were used to describe the function of the heat exchangers and condensers.

Static Problem Solution
The primary goal of evaluating the combined cycle system under static conditions is to determine the dependence of the system parameters on:

- natural gas pressure at the reformer inlet-4.0 MPa,
- natural gas flow rate at the reformer inlet-1 mole/sec,
- steam to gas ratio at the reformer inlet-from 1 to 5,
- reforming process temperature-1200 K,
- synthesis gas pressure at the turbine outlet-0.6 MPa,
- fuel cell operating temperature-1300 K, and
- efficiency of system components: for the turbine- 0.90, and for the compressor-0.85 .

The following parameters of the system were determined under given conditions depending on the steam to gas ratio:

- synthesis gas composition after reforming,
- synthesis gas turbine power,
- H_2 fuel cell power, heat, and efficiency,
- CO fuel cell power, heat, and efficiency,
- air turbine power,
- air compressor power,
- steam reformer process heat consumed,
- system heat balance,
- system efficiencies (electrical and total) ,
- natural gas flow rate for a 250 kW plant, and
- fuel cost per kWh produced by the system.

Static Model Results
The degree of methane conversion in the reformer reached 95 % with a steam to gas ratio of 5. However, such a system requires large compressors to move such large amounts of gas. It is more cost effective to have a system with a steam to gas flow ratio of 3. In such a system, the model predicts the degree of methane conversion to be 88 %. The CO_2 concentration in the synthesis gas after the reformer is approximately zero, which indicates that the shift-reaction does not occur in the reformer at 1200 K.

The effective efficiency coefficients of fuel cells are 0.70 for the H_2 fuel cell and 0.63 for the CO fuel cell, and the system total efficiency is about 0.80 when N=3. The system heat balance is positive when the steam to fuel ratio is 3. For a 250 kW system, the methane consumption is 6 g/sec and the fuel cost element of the cost of electricity is about 1.0 cent per kwh based on a natural gas price of \$100//1000 m^3.

Conclusions

The following conclusions result from this research:

1. The LAJ Cycle is a new fossil-fuel combined cycle power system that is capable of achieving a conversion efficiency (fuel chemical energy to electricity) of over 70%.

2. A useful mathematical tool has been developed to assess the performance of combined cycle systems employing fuel cells and turbines.

3. Although a water-to-gas mole flow ratio of 5 provides for the greatest extent of fuel utilization, equipment size is very large. The preferred water-to-gas mole flow rate is 3.

4. The system power can be decreased by approximately 20 % by disconnecting gas and air turbines. It is possible to decrease the system output power by more than 20 % only by decreasing the fuel cell power.

5. Nitrogen oxides are not formed in exhaust gases under the system maximum working temperature.

6. Carbon dioxide formed in the CO fuel cell is isolated as a separate flow stream. This facilitates its separation and capture as well as integration into sequestration schemes.

7. The fuel component for the cost of electricity at N=3 is about 1 cent/kwh.

8. Nearly all the fuel is utilized in the fuel cells of the LAJ cycle, in contrast to the ineffective combustion of unreacted fuel in most combined cycle systems. [13]

References

[1] Van Schie, N., 1995, "Solid Oxide Fuel Cell in Combination with a Gas Turbine," ECN-I—95-020, Netherlands Energy Research Foundation ECN.

[2] *Gas Turbine World, 2000-2001 Handbook for Project Planning, Design, Erection, and Operation*, Vol. 21, Pequot Publishing Inc., Fairfield, Conn., 2001.

[3] van Liere, J., 1997, "Present Status of Advanced Coal-Fired Power Plants," in *Proceedings of the Second International Workshop on Corrosion in Advanced Power Plants*, Materials at High Temperatures, Science and Technology Letters, Vol. 14, Nos. 2/3.

[4] Judkins, R. R., Armstrong, T. R., and Labinov, S. D., 2002, "The LAJ Cycle: A New Combined-Cycle Fossil-Fuel Power System," Paper No. GT-2002-30612 in *Proceedings of ASME Turbo Expo Land, Sea, and Air*, June 3-6, 2002.

[5] Judkins, R. R., Armstrong, T. R., and Labinov, S. D., 2002, "A Universal Mathematical Model for a New Combined-Cycle, Fossil-Fuel Power System (LAJ Cycle): Part 1-Static Model," Paper No. GT-2002-30611 in *Proceedings of ASME Turbo*

Expo Land, Sea, and Air, June 3-6, 2002.

[6] Judkins, R. R., Armstrong, T. R., and Labinov, S. D., 2002, "A Universal Mathematical Model for a New Combined-Cycle, Fossil-Fuel Power System (LAJ Cycle): Part 2-Dynamic Model," Paper No. GT-2002-30665 in *Proceedings of ASME Turbo Expo Land, Sea, and Air*, June 3-6, 2002.

[7] Westhoff, M. A., 1999, "Using Operating Data at Natural Gas Pipelines," in *Proceedings: International Symposium on Transportation Recorders* Arlington, Va.

[8] Boswinkel, H. H., and van der Laken, R. A., 1990, "Outline of a R&D Programme 'H_2-CO_2 Technology'," ECN-1-90-029, Netherlands Energy Research Foundation ECN.

[9] Bischoff, B. L., and Judkins, R. R., 2003, "Development of Inorganic Membranes for Hydrogen Separation," *2003 Conference Proceedings 17th Annual Conference on Fossil Energy Materials*, U. S. Department of Energy.

[10] Badin, J. S., DeLallo, M. R., Klett, M.G., Rutkowski, M. D., and Temchen, J. R., 2000, "Coal Processing Plant for Hydrogen Production with CO_2 Capture," Paper presented at 25th International Technical Conference on Coal Utilization and Fuel Systems, Clearwater, Fla.

[11] George, T. J., and James, R. J., 1998, *Multistaged Solid State Fuel Cell Power Plant Concept,* Report PE1998.03, National Energy Technology Laboratory, Morgantown, W.Va.

[12] George,Thomas J., and Smith, William C., 2000, "Multi-stage Fuel Cell System Method and Apparatus," U. S. Patent No. 6,033,794.

[13] Domeracki, W. F., Lundberg, W. L., Dowdy, T. E., and Linder, J. M., 1995, "Integrated Gas Turbine Solid Oxide Fuel Cell System," U.S. Patent 5,413,879.

Acknowledgements

The Laboratory Directed Research and Development Program at Oak Ridge National Laboratory under Seed Money Project 3210-004Q sponsored this work. ORNL is Managed by UT Battelle, LLC, for the U. S. Department of Energy under Contract No DE-AC05-00OR22725.