Overview
Oak Ridge National Laboratory's Power Electronic and Electric Machinery Research Center

Presented at the

Korea Electrotechnology

Research Institutes

(Mechatronics Research Group)

by John W. McKeever

February 3, 2004

OAK RIDGE NATIONAL LABORATORY
U. S. DEPARTMENT OF ENERGY

Power Electronics and Electric Machinery Research Center

- **It is the U.S. Department of Energy's broad-based power electronic and electric machinery research center.**
- **Its URL is www.ornl.gov/sci/engineering_science_technology/peemrc**
- **The center conducts research and has advanced technology in:**
  - **Soft-switched inverters**
  - **Multilevel inverters**
  - **Non-active power compensation**
  - **Motor control techniques**
  - **Efficient, compact electric machines**
  - **Integration of electric motors with combustion engines**
  - **Energy storage**

PEEMRC's National Laboratory Role

- **Conducts fundamental research**
- **Evaluates commercially supplied prototype hardware**
- **Assists in technical direction of the DOE's FreedomCAR and Vehicle Technologies' Power Electronics and Electric Machinery Program**
  - **Serves on FreedomCAR Electrical and Electronics Technical Team**
  - **Evaluates proposals for DOE**
  - **Lends technological expertise to help direct projects and evaluate developing technologies**

The Center's Mode of Operation

- **The Center is actively involved in partnerships with several universities, private and public companies, other federal agencies, and consortiums.**
- **Projects are supported by various offices of DOE, DOD, and industry.**
- **Most funding is for hybrid-electric vehicles.**
- **Other research areas include heavy hybrid vehicles, fuel cells, distributed energy, power quality and transmission, and motors and drives for special applications.**
- **Projects directly funded by industrial partners allow proprietary work.**

Historical Summary

- **Emerged after the end of an early DOE program from technology that could be transferred to US industry.**
- **Since 1992 the group has grown to become the US DOE's broad–based research center for power electronic inverters and electric machinery development and has been designated a DOE User Facility.**
- **Has 22 employees and 8 students.**
  - **9 PhDs, 5 MSs**
  - **Disciplines include, electrical engineering, mechanical engineering, nuclear engineering, and physics.**
  - **Many active in professional societies like IEEE, ASME, and SAE in leadership positions such as board of governors, society committees, and session chairs.**
- **Located in the NTRC as an 800 m^2 laboratory and offices**
  - **Large research areas on first and second floors of NTRC**
  - **Two dynamometer test cells and control room**
  - **Machine development shop**
  - **Motor research lab**
  - **Digital development lab**
  - **Inverter development lab**

Auxiliary Resonant Tank Soft-switched Inverter

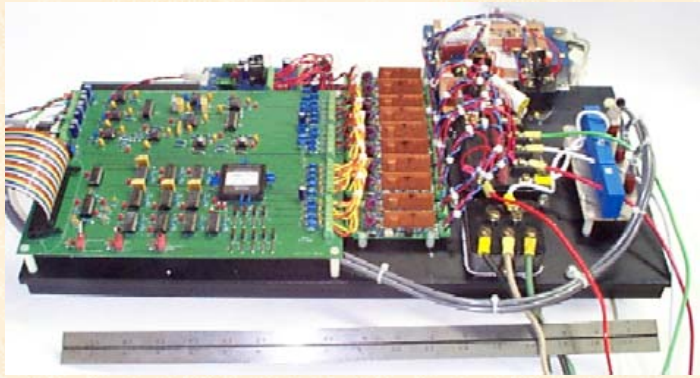

<u>1st unit</u> - proof-of-principle
10 kW output, invented 1997

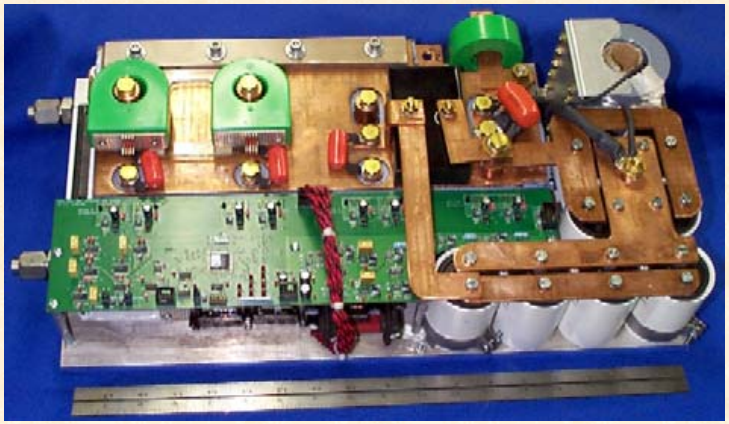

<u>2nd unit</u> - laboratory prototype
100 kW, built mid 1998

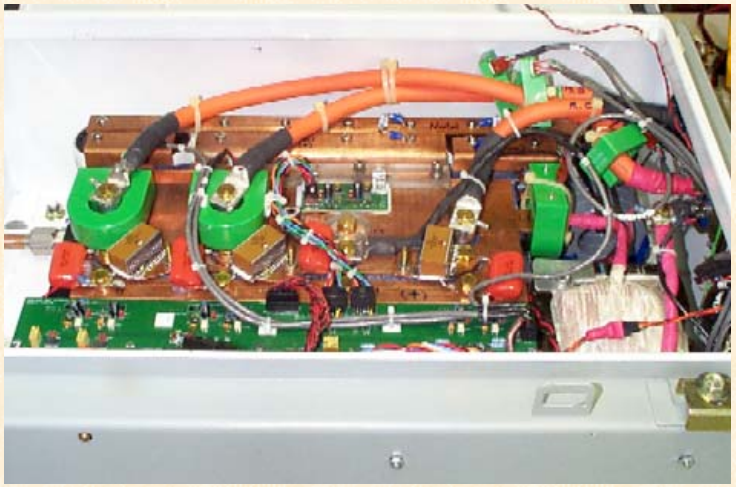

<u>3rd unit</u> – 100 kW vehicle ready
installed on vehicle 1999

Soft-switched Snubber Inverter

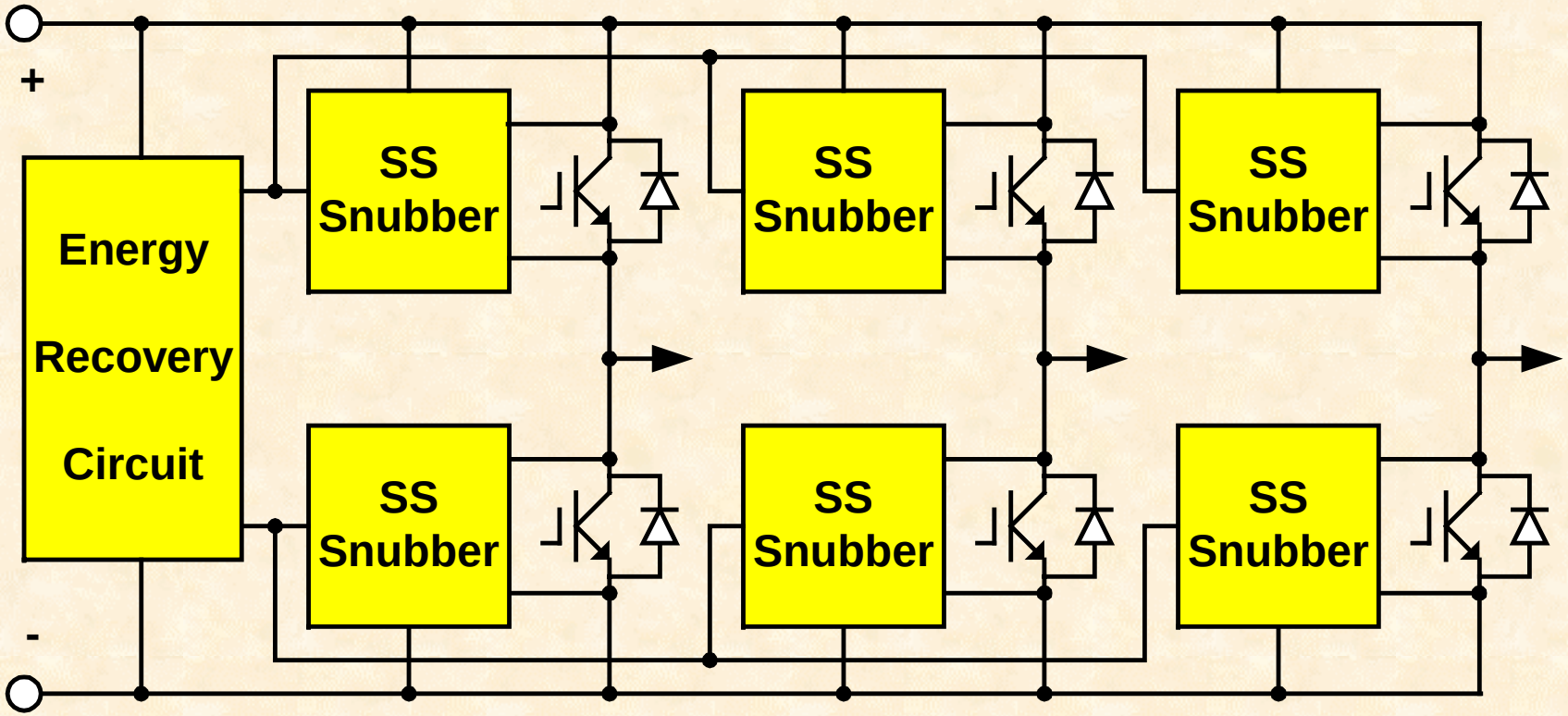

Three-phase configuration

Soft-switched Snubber Inverter

Proof-Of-Concept Test Setup

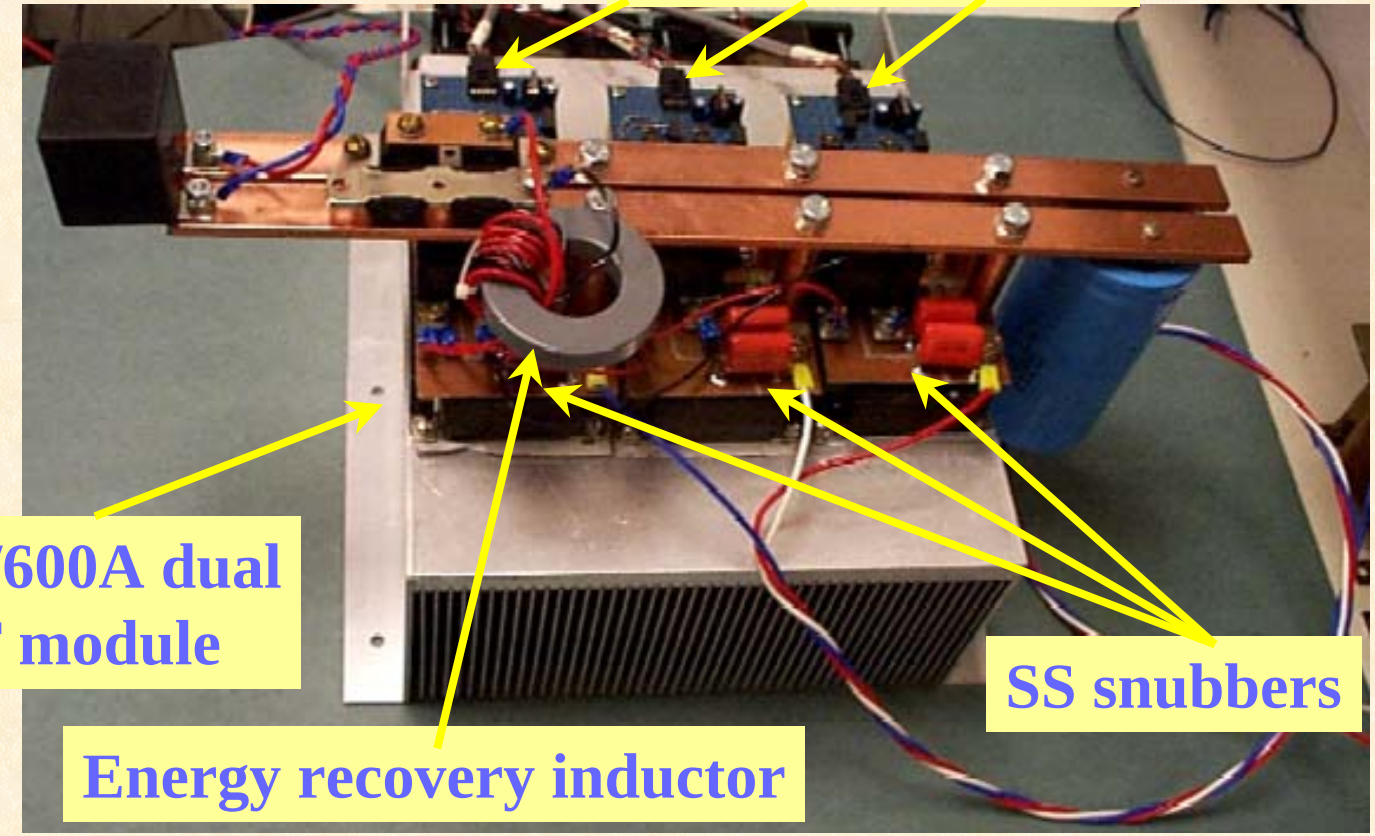

Gui-Jia Su, et al, "A Passive Soft-switched Snubber for PWM Inverters"

To be published in March 2004 issue of Transactions on Power Electronics

Bi-directional DC/DC Converter

- Background Review -

- Challenges in DC/DC Converters for Fuel Cell Vehicles
  - High power and high current – 5 kW peak/1.6 kW cont.
  - High voltage ratio – 12 V vs 300 V
  - Bi-directional
  - Low cost and reliability
  - Very few topologies/products available
    - High cost, excessive number of components
    - High EMI emission

- DC/DC Converter Development at ORNL
  - First generation (1997~1999, developed at Virginia Tech through subcontract)
  - Second generation (1999~)

Bi-directional DC/DC Converter

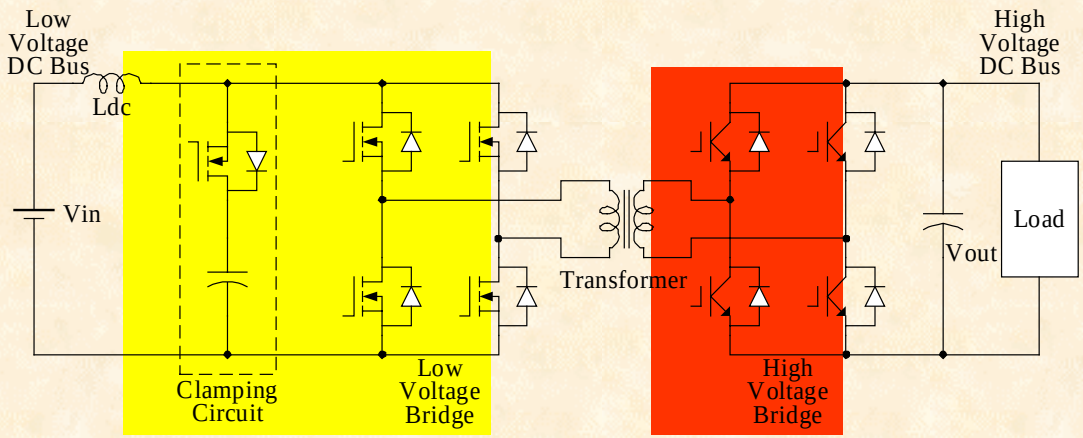

First Generation

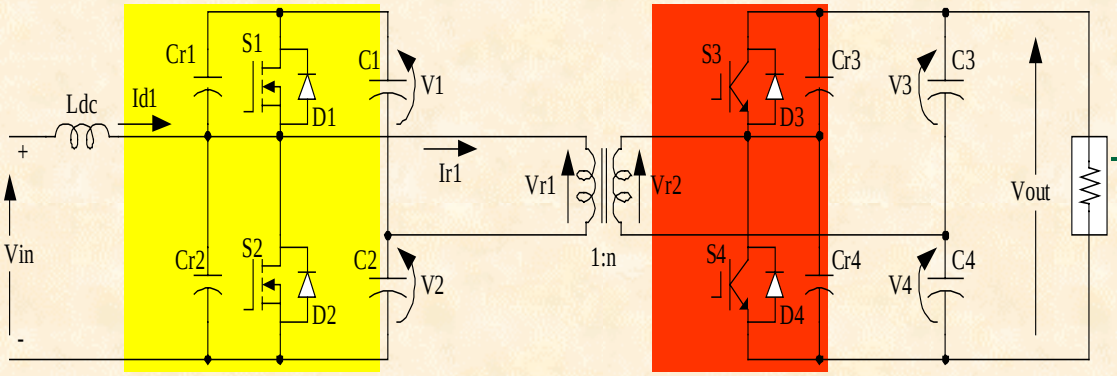

Second Generation

- **Dual full bridges**
- **Soft switching with the help of the clamping circuit**

- **Half the component count**
- **Soft switching w/o additional components**
- **Less control and accessories (power supplies, gate drivers)**
- **More compact, light, and reliable**
- **Low cost**

Bi-directional DC/DC Converter

First Generation (1997~1999)

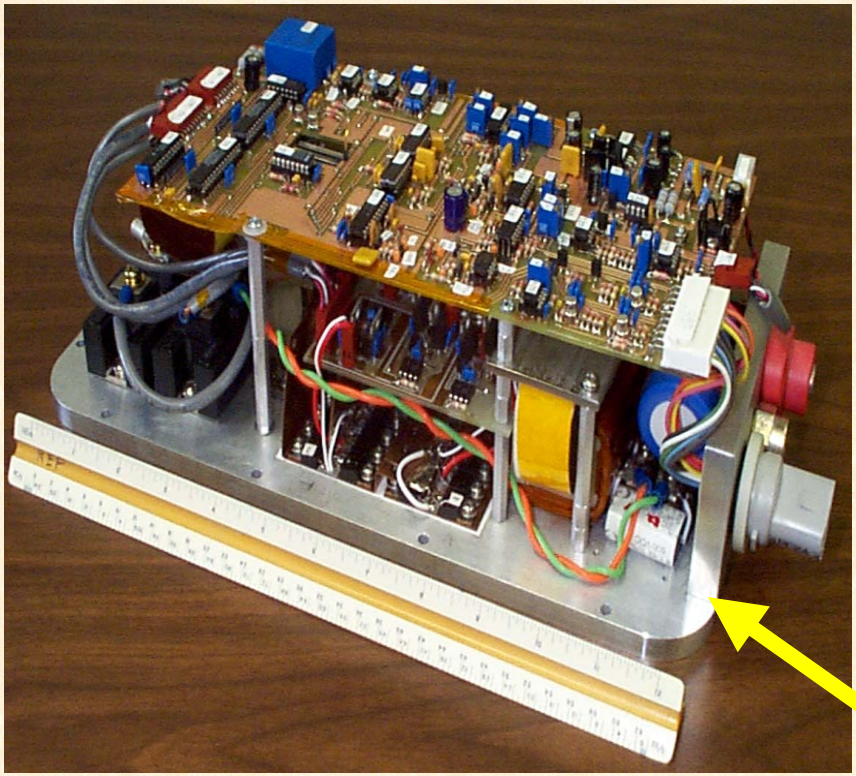

Second Generation (1999~)

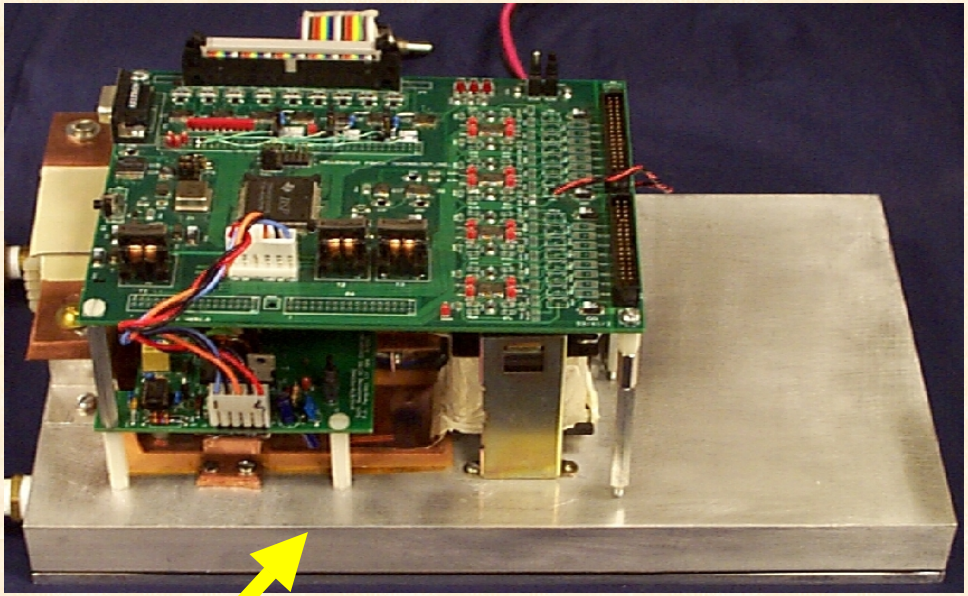

Same footprint (7.5” X 13.5”)

Multilevel Converters

- **General Structure**
  - **Synthesize a sinusoidal voltage from several levels of dc voltages**
  - **More levels produce a staircase waveform that approaches a sinusoid**
  - **Harmonic distortion of output waveform decreases with more levels**
  - **No voltage sharing problems with series connected devices**
  - **Low dV/dt reduces switching losses, EMI, and damage to motor insulation and bearings**
- **Control Scheme**
  - **Fundamental frequency switching of devices**
  - **Elimination of lower frequency harmonics**

Multilevel Cascaded Inverter with Separate DC Sources

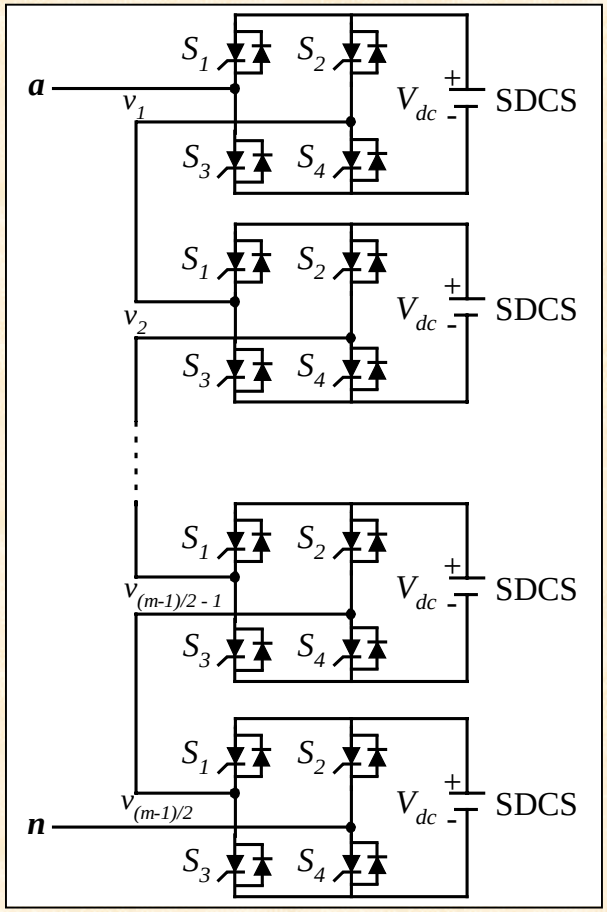

Single Phase Cascade Structure

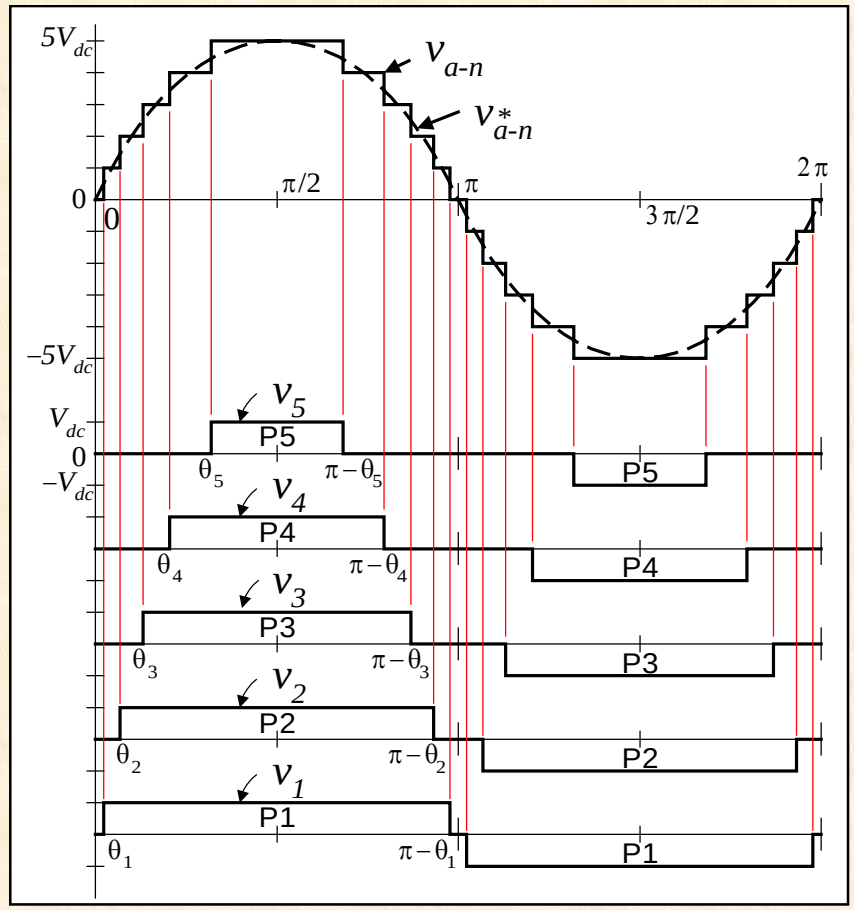

Output Voltage Waveform

A 5-Level Multilevel DC Link for HEVs

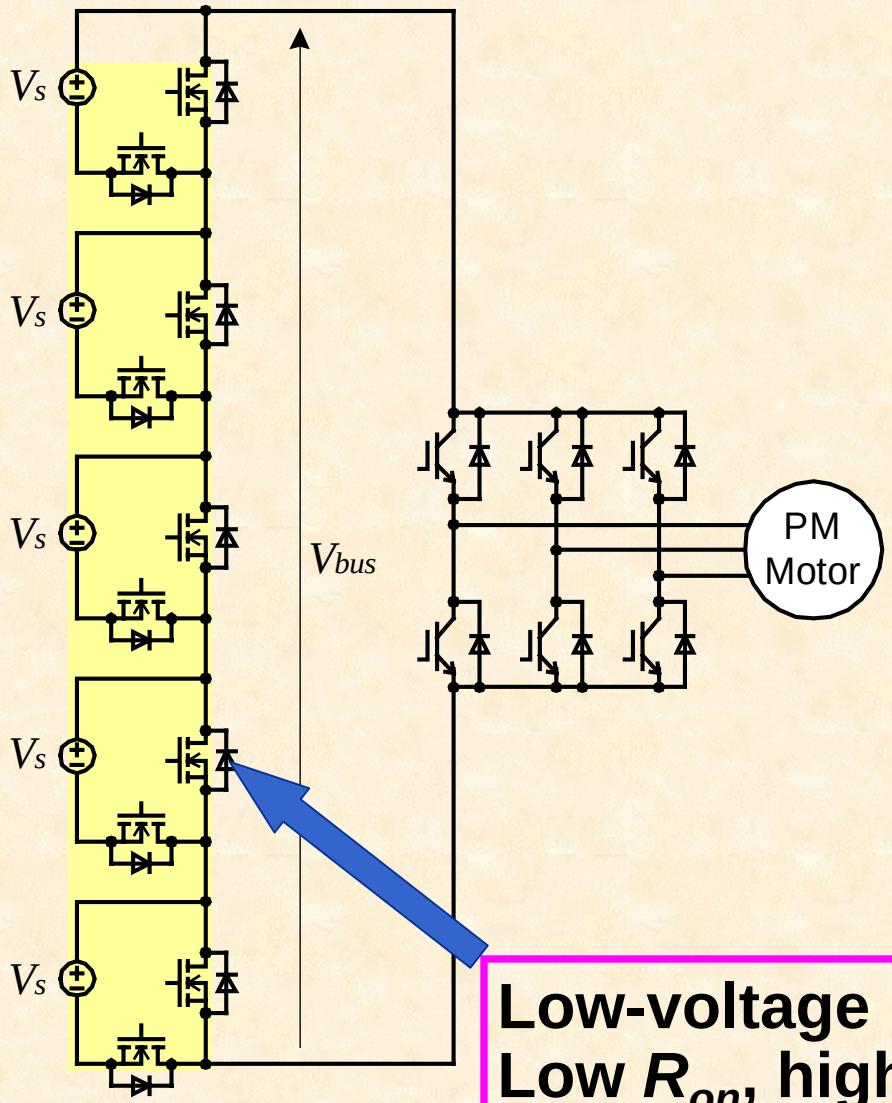

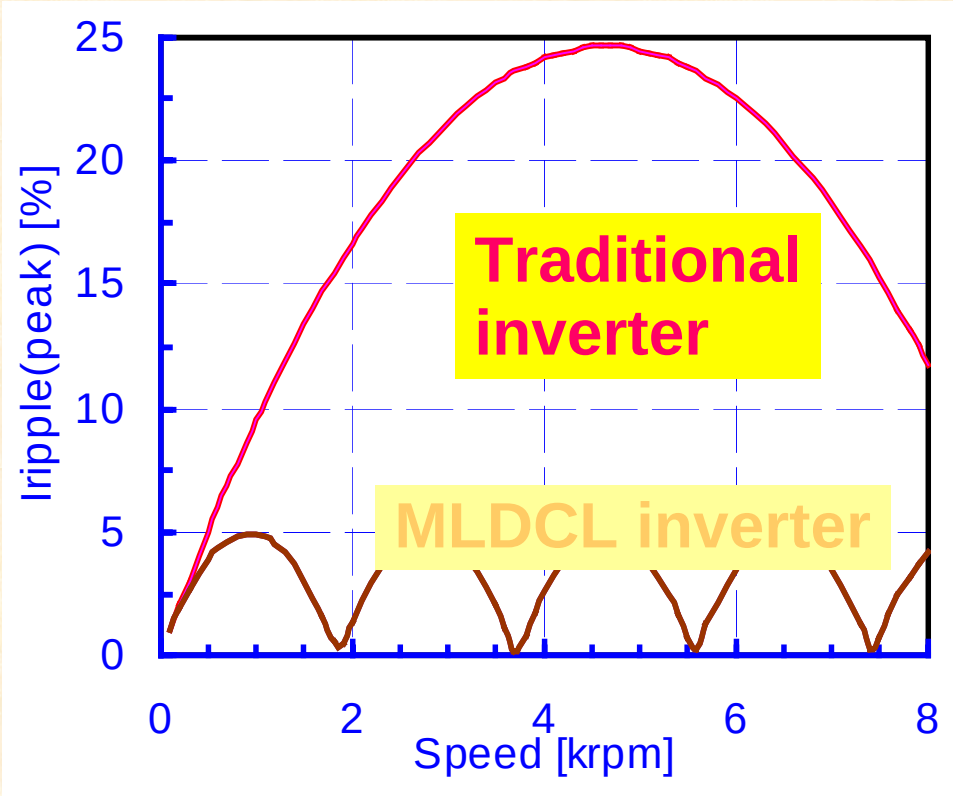

L_m=37.5μH, V_s=65V, f_{sw}=20kHz

Low-voltage MOSFETs:
Low R_{on}, higher switching frequency

Multilevel Cell Modules for Multi-voltage Systems

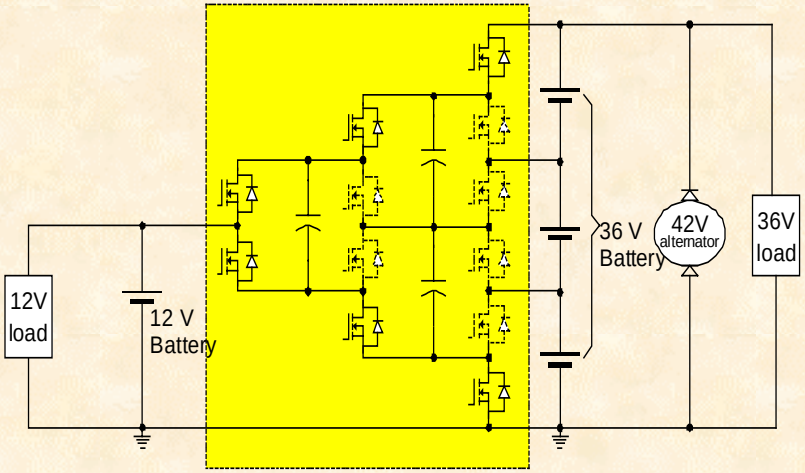

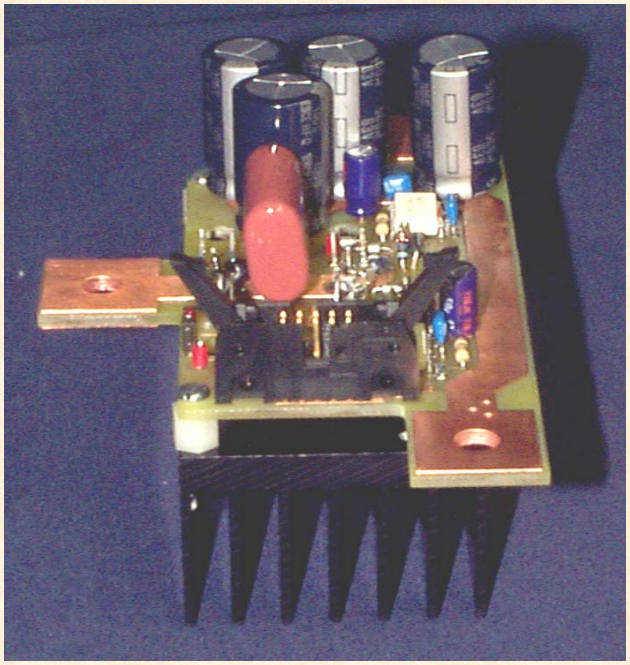

Utilize the 2-kW (140 A/60 V) half-bridge multilevel cell modules for dual voltage systems

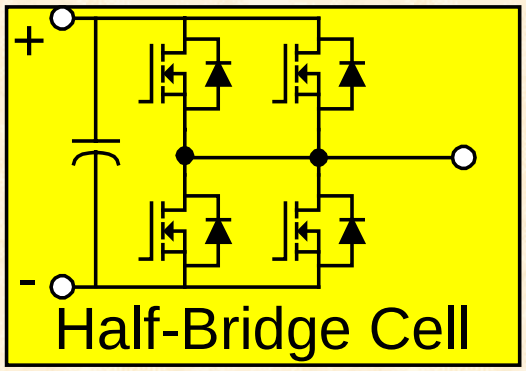

Future Power Electronics *Will Be* SiC

Today's Technology	Advantages of Silicon Carbide	Payoff
Large energy losses	Reduce loss by 10x	Large improvement in efficiency
Limited voltage and power level	Increase power 10^3x	Simplify use (no need to series/parallel devices)
Low operating temperature (<150ºC)	Increase range to 350ºC or higher	New applications; eliminate massive heat sinks
Large heat sinks & filters	Reduce size/weight by 3x	Lightweight, compact systems

SiC Background

- **SiC device properties superior to present Si devices**
  - **They can operate at high temperatures (up to 350°C).**
  - **They have low thermal resistivity.**
  - **They have higher breakdown (blocking) voltages.**
  - **They have low on-resistance (low conduction losses).**
  - **They have excellent reverse recovery characteristics.**
  - **They can operate at high switching frequencies.**
- **Challenges in applications of SiC**
  - **SiC material is more expensive than Si.**
  - **Yield is low because manufacturing processes are not mature.**
  - **New circuits, gate drivers are needed to take advantage of SiC properties.**

Device Modeling of Diode Switching Losses

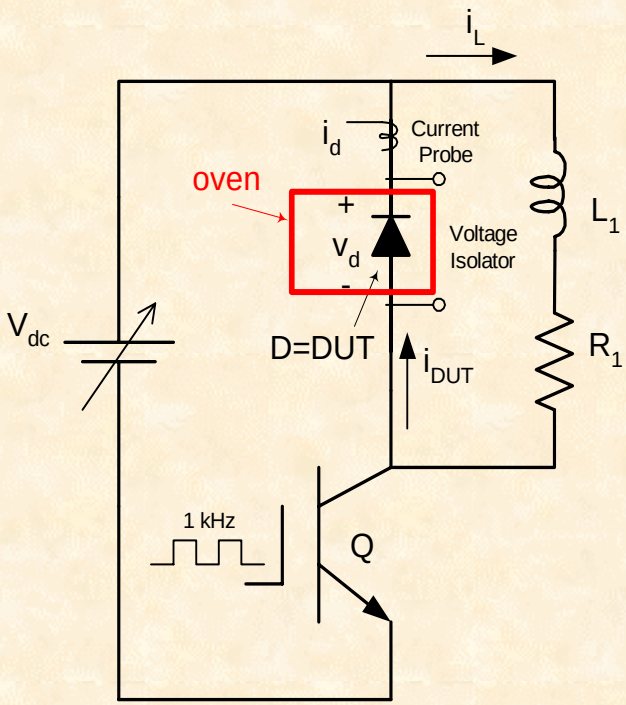

Reverse recovery loss measurement circuit

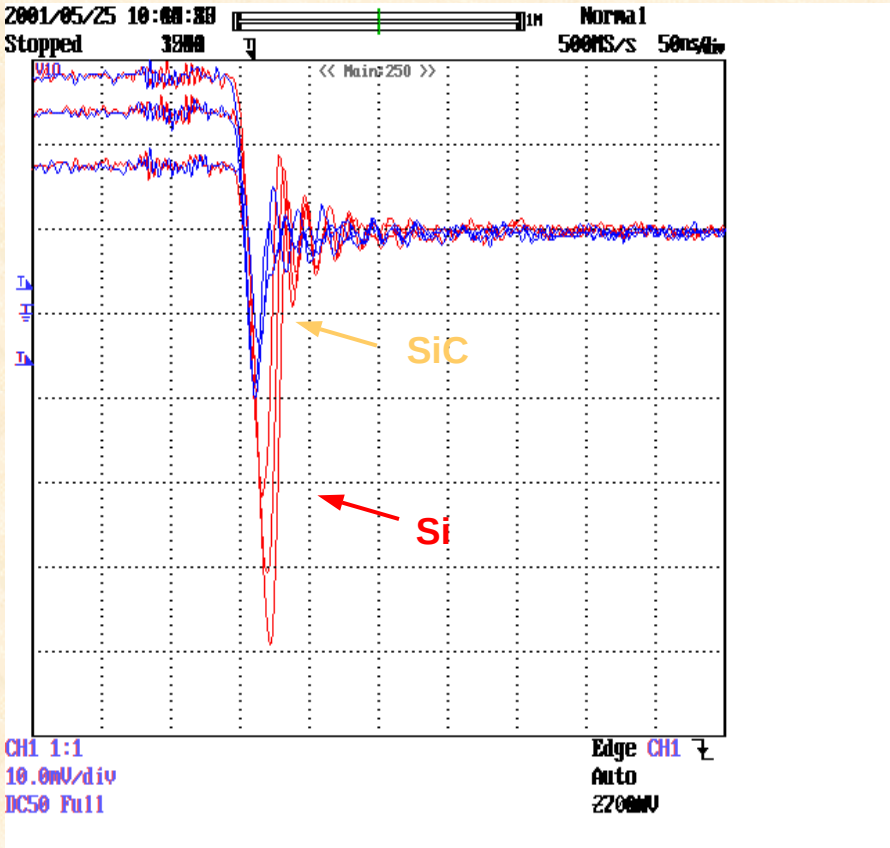

Typical reverse recovery waveforms of the Si pn and SiC Schottky diodes

New Gate Drives For SiC MOSFETs/IGBTs

- **Problems and Limitations of existing gate drives**
  - **They are operable only at up to *20 kHz* switching at high power.**
  - **They have a long *(1-2ms)* propagation delay.**
  - **They do not take advantage of SiC's <u>high-speed</u> and <u>high-temperature</u> operation.**

Innovative new circuit designs required to exploit advantages of SiC

- **Design and build new gate drive**
  - **A new gate drive circuit developed for SiC MOSFETs operated at up to *500 kHz* at high temperatures (*250°C*).**
  - **Test gate drive on SiC MOSFETs developed by ORNL and/or others.**

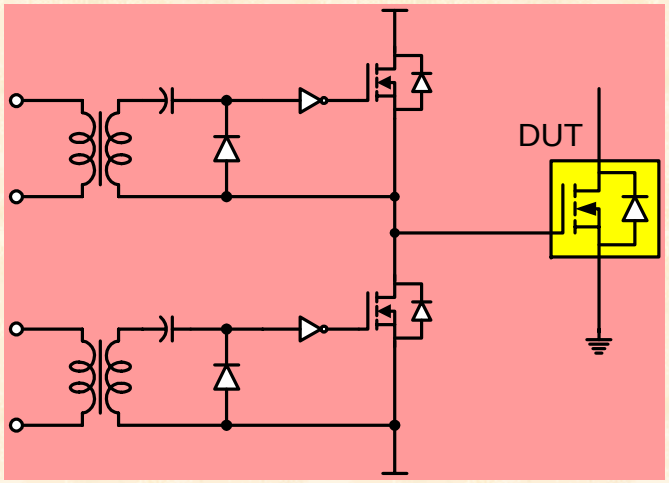

Torque - Speed Curves for AEMD testing

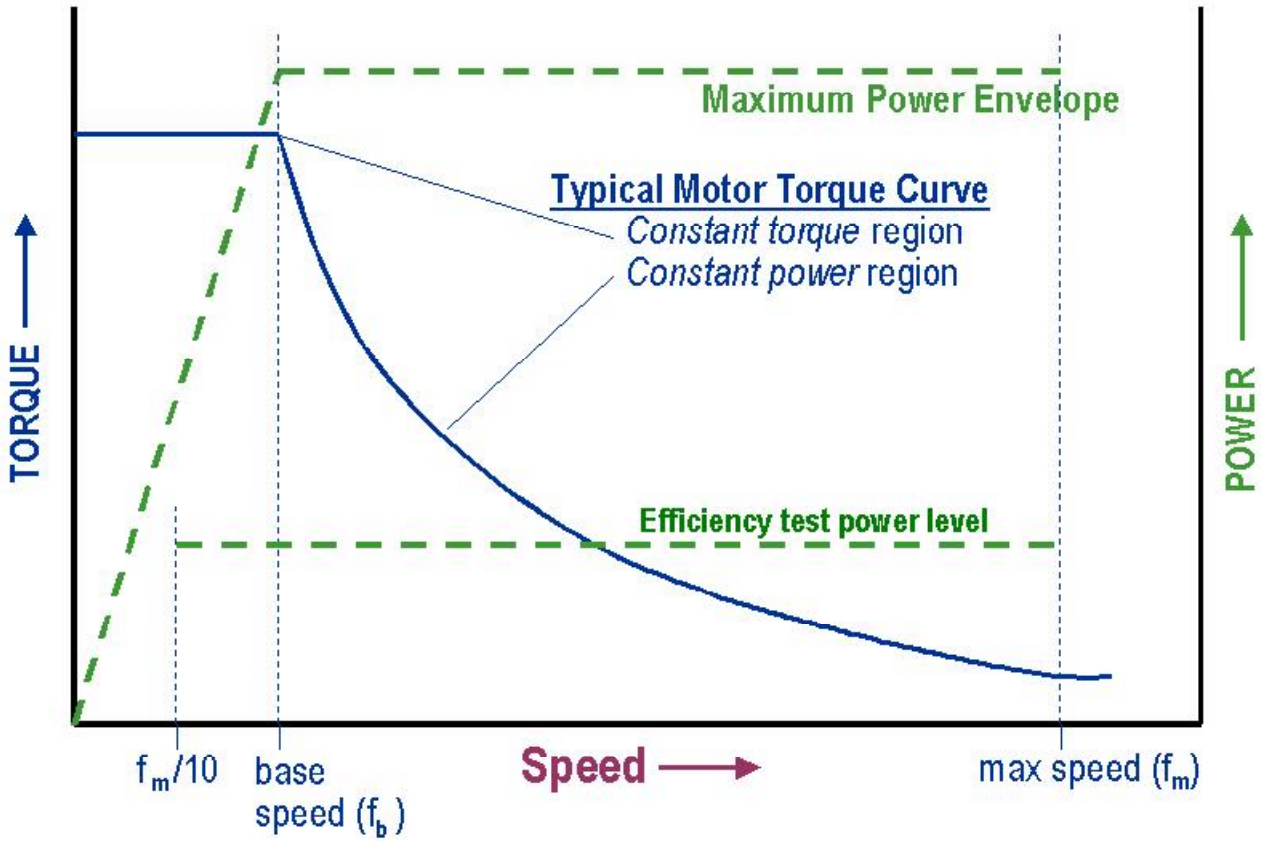

Rotor Assembly
(30-kW axial-gap PM motor)

Pre-closure

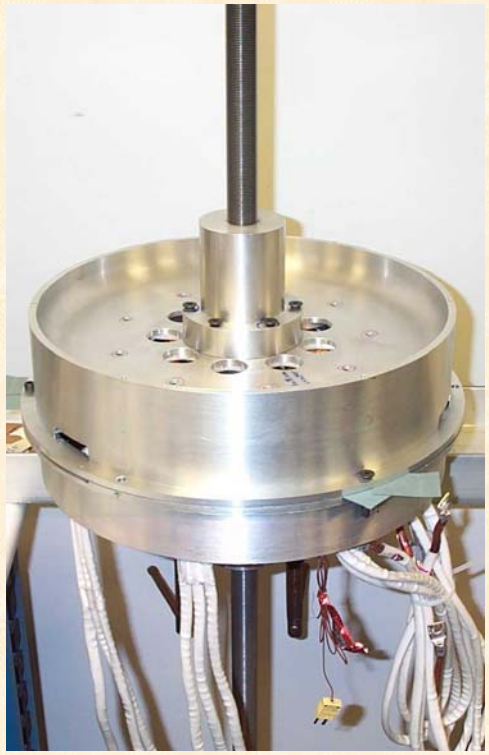

Post-closure

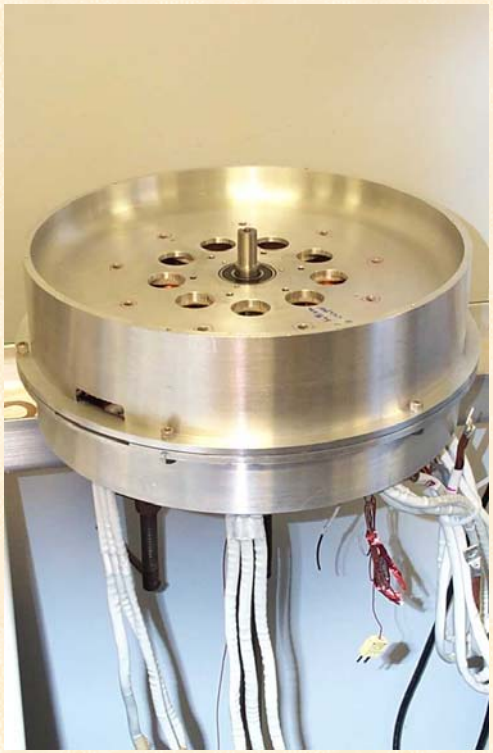

Jig removed

DMIC Inverter and Motor in Test Cell 1 Ready for Prequalification

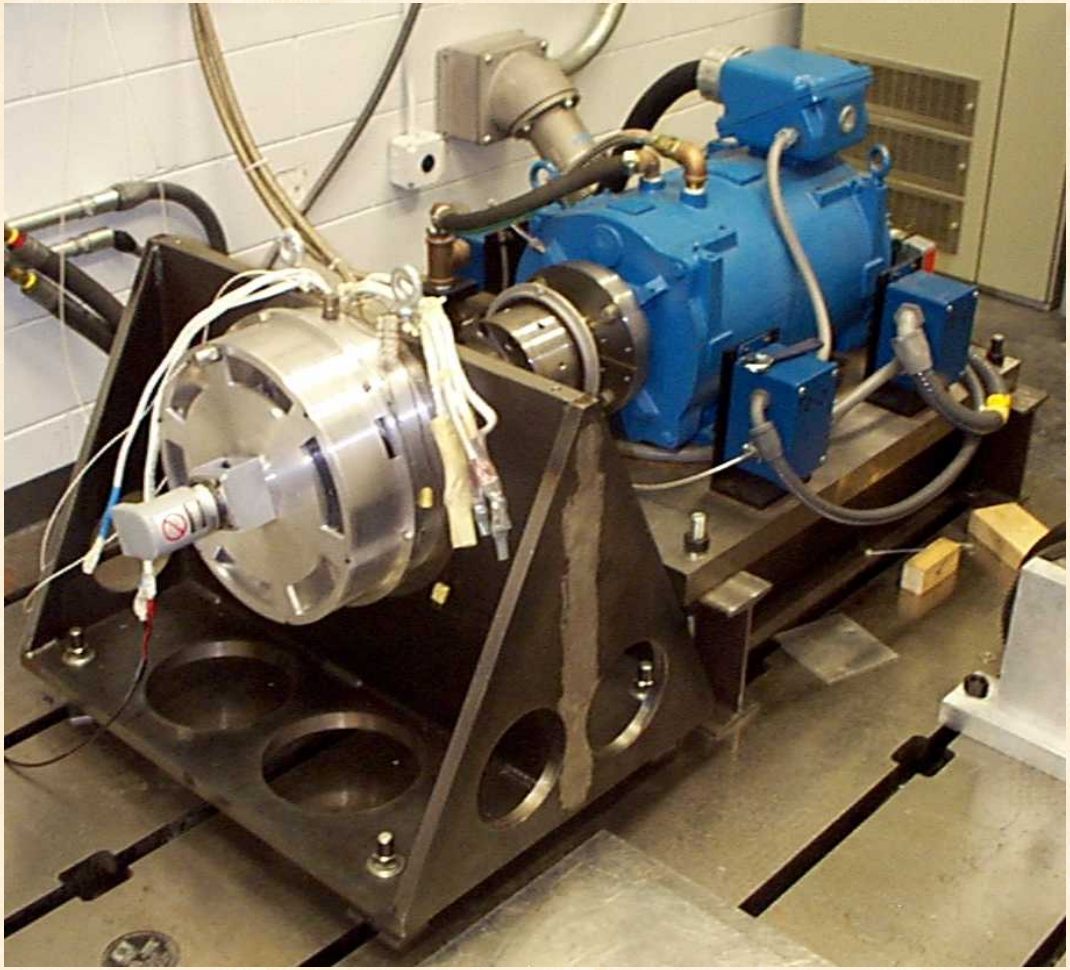

Dual Mode Inverter Control Inverter Topology

- **Thyristors prevent the detrimental mixture of motoring and regeneration during high-speed operation in motoring mode.**

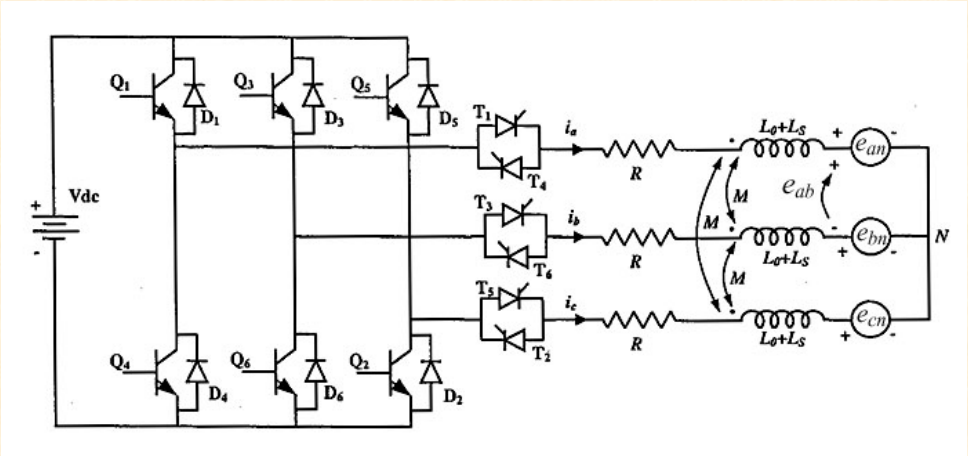

- **Loss of semiconductor firing signals extinguishes motor current within one-half electrical cycle.**
- **Motor cannot enter regeneration when firing signals are lost, and thyristors isolate motor from faults in the transistor inverter and dc voltage supply system.**
- **During coasting, the motor current can be cut off, eliminating stator copper losses.**
- **Transistors need to be rated only to block the dc supply voltage.**
- **Motor emf is blocked by thyristors.**

Analytical Waveforms in one 60° Interval

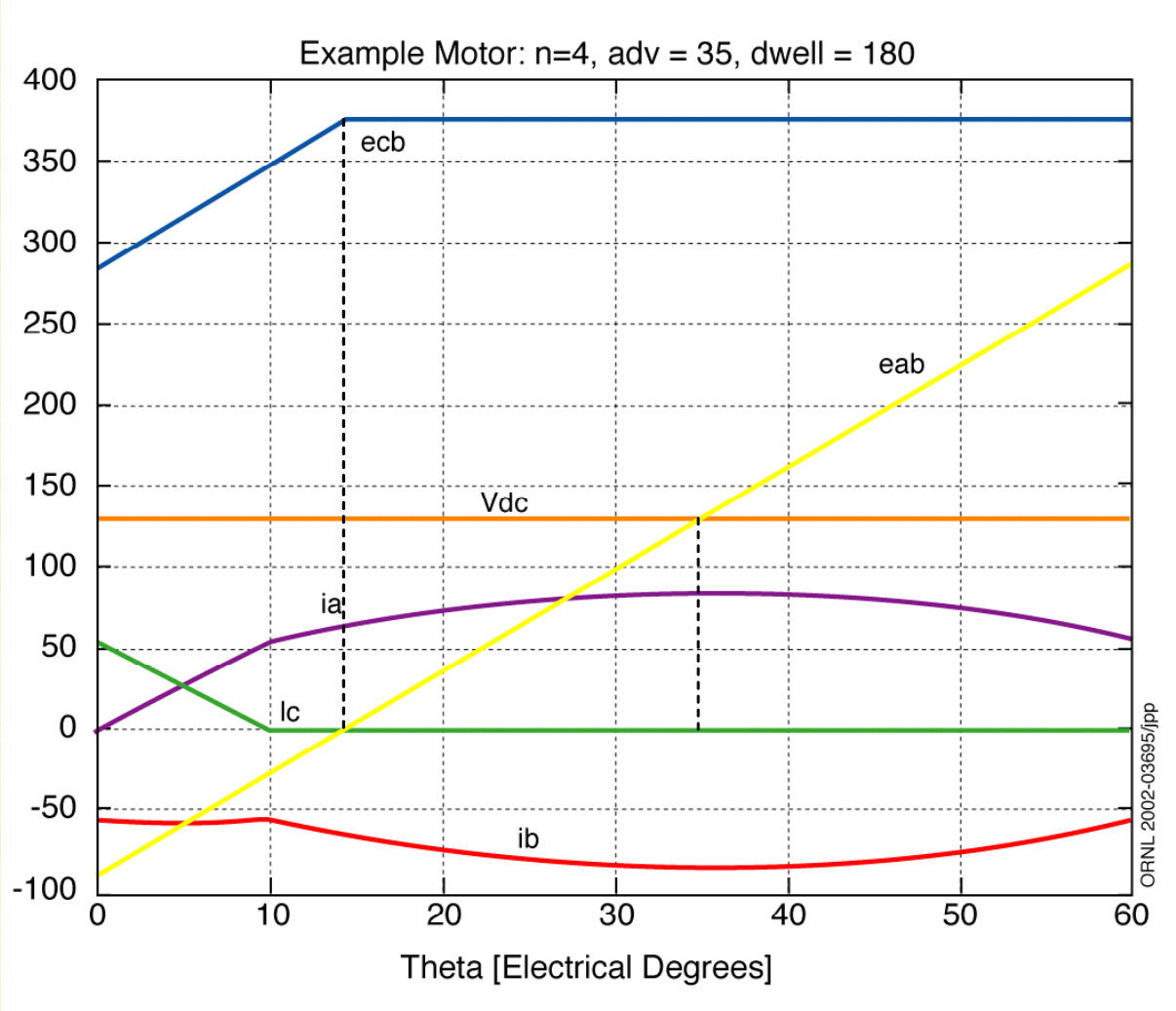

Back emf and Phase Current Flow in Conventional Phase Advance

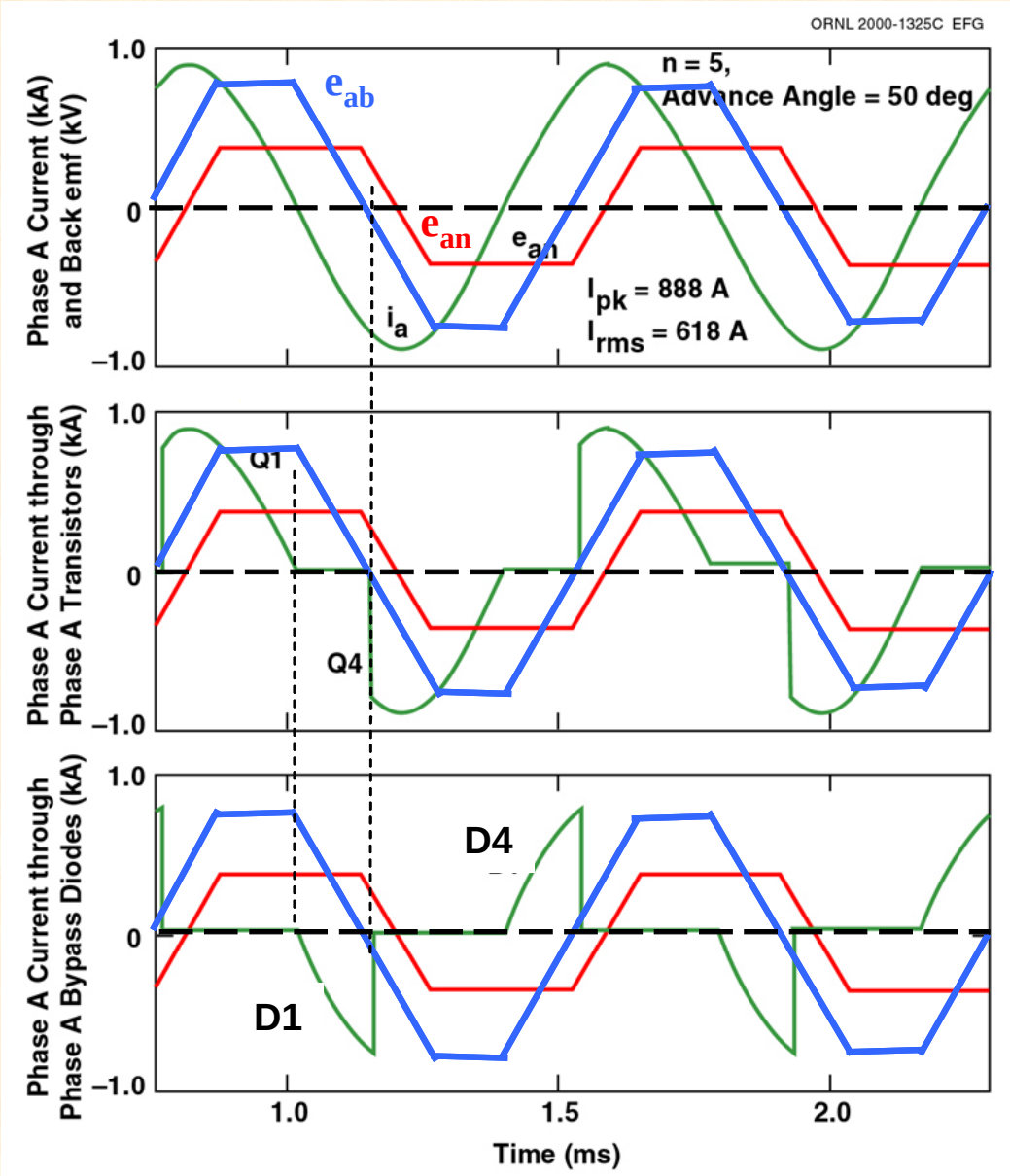

Detrimental Power Flow during Conventional Phase Advance

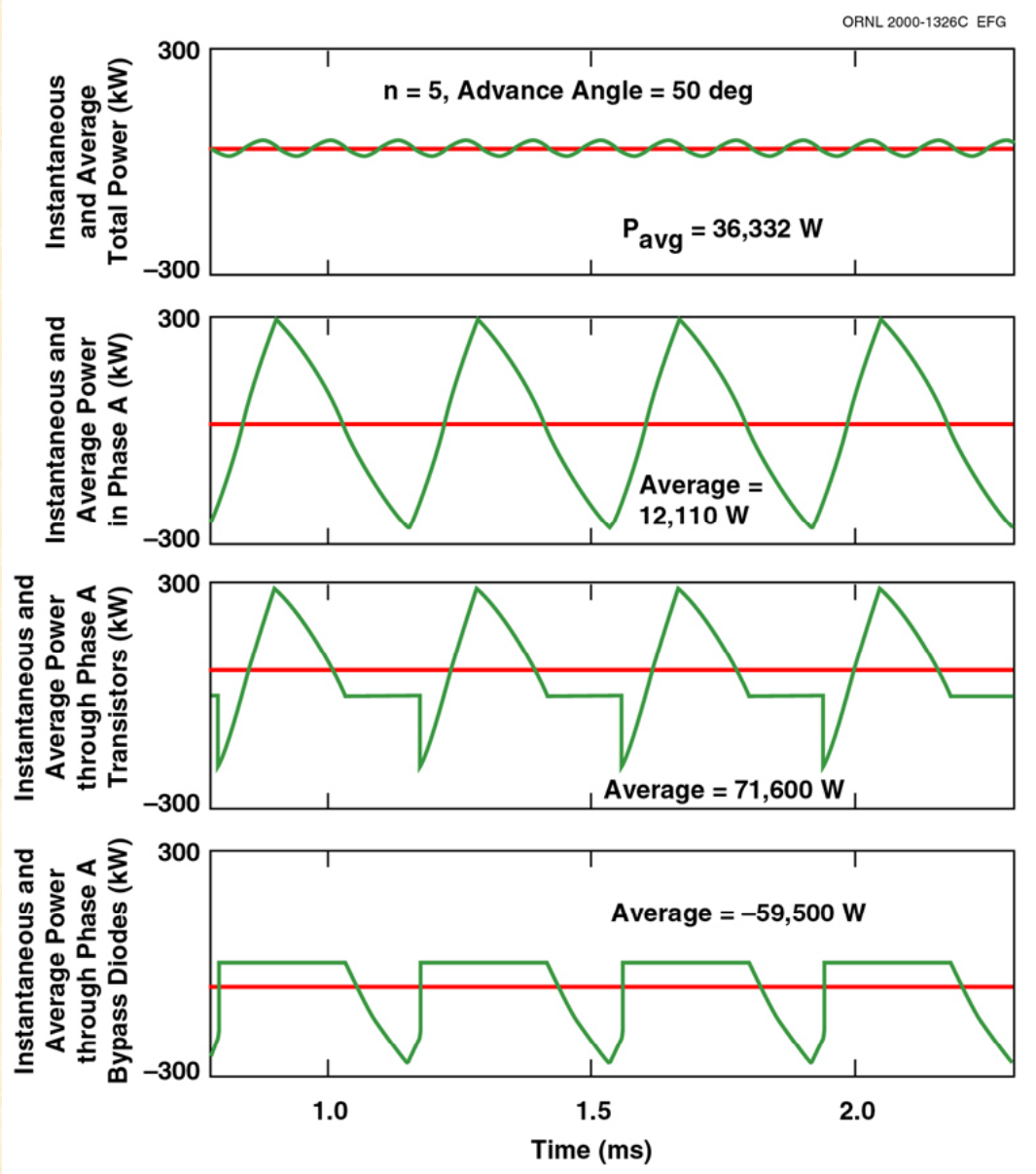

Features of the DMIC

- **Can drive "low" inductance BDCM over a wide CPSR without exceeding the rated (base speed) rms motor current.**
- **Can drive "high" inductance BDCM over a wide CPSR without exceeding the rated rms current. Can expect up to 50% more power at high speed.**
- **Can tolerate large changes in the dc supply voltage. As the dc supply voltage decreases, motor power is reduced, but the rated rms motor current can be maintained.**
- **Can control both motoring and regenerative braking over the entire speed range.**
- **Achieves functional equivalent of field weakening without supplementary field windings or exotic rotor/magnet configuration.**
- **J. S. Lawler, et al, "Extending the Constant Power Speed Range of the Brushless DC Motor through Dual-Mode inverter Control" accepted for publication soon in Transactions on Power Electronics.**

Unique Properties of HSUB Motor

- No rotor copper loss
- Easy field weakening
- High power factor and high CPSR
- No vibration and noise problems
- Simple inverter, no sensor
- Higher air gap flux density
- Good cooling for high current density
- Robust – can be axial-gap or radial-gap

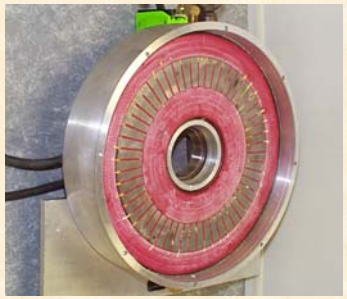

Cut View of an Axial-gap HSU-B Motor

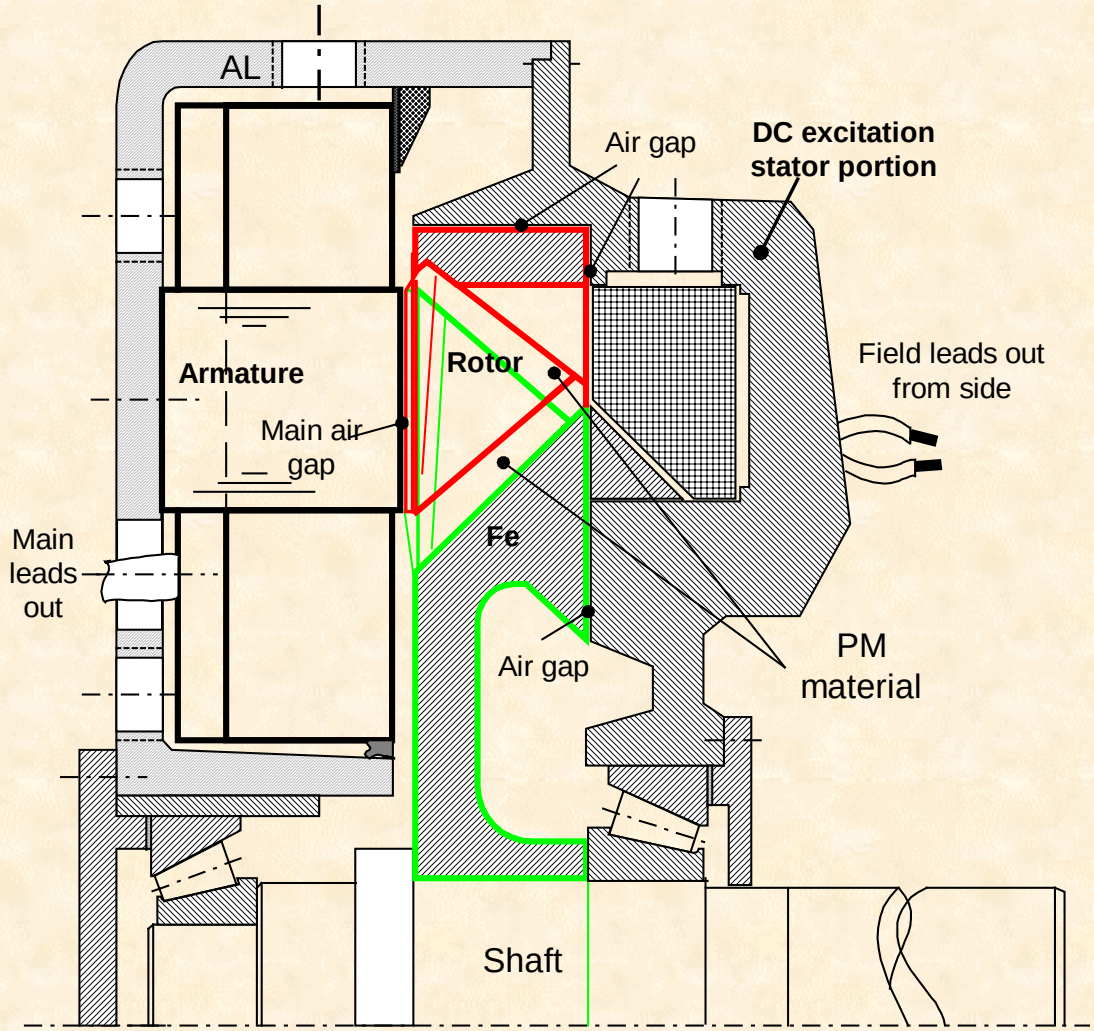

HSU-B Rotor Outer and Inner "Rings"

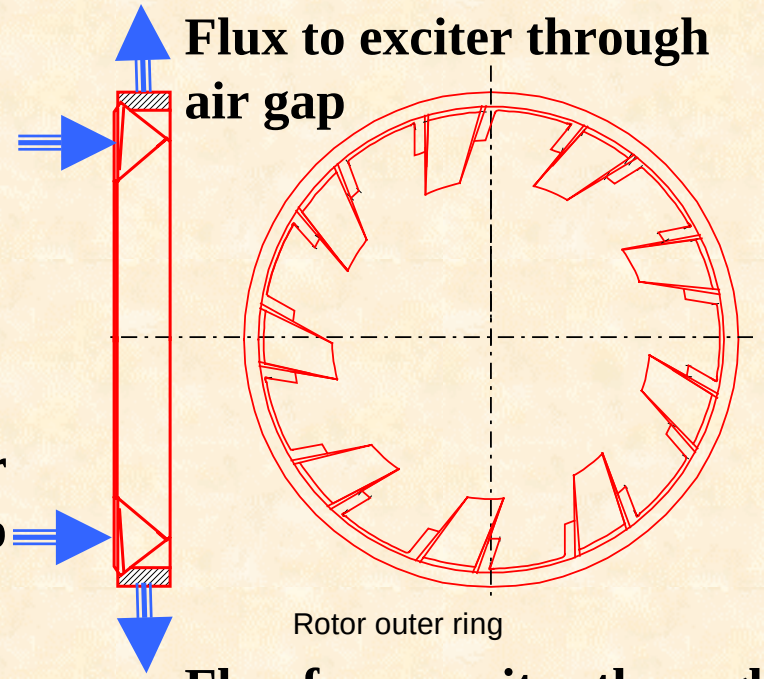

Rotor outer ring

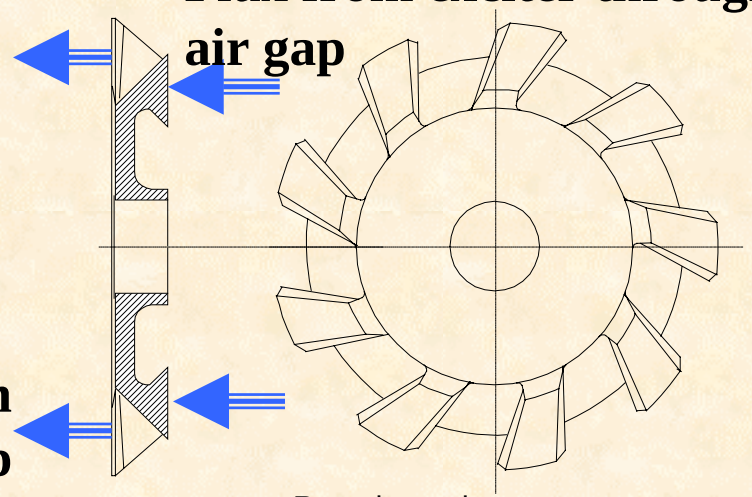

Rotor inner ring

HSU-B Prototype Motor and Early Test Results

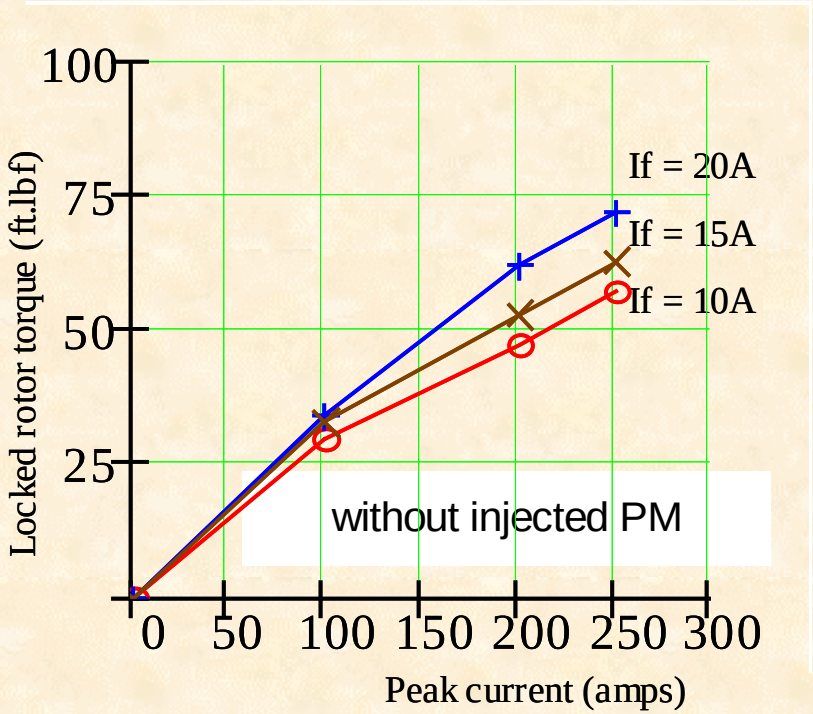

Switched Reluctance Motor

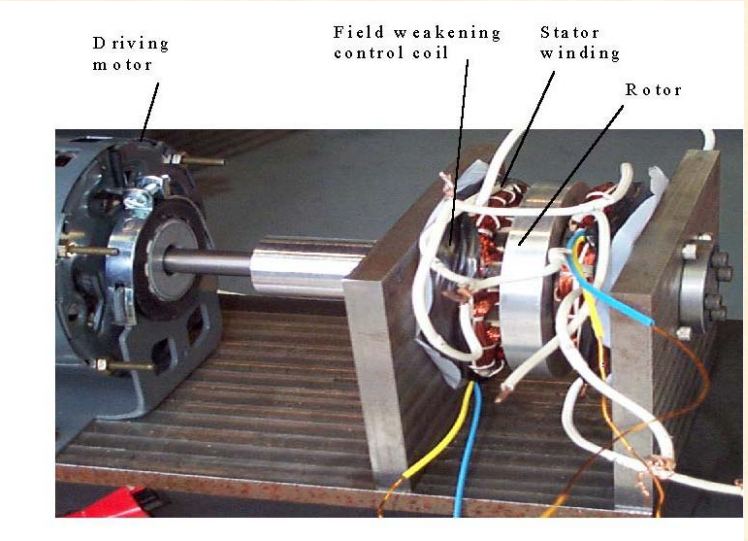

Field-Weakened PM Motor

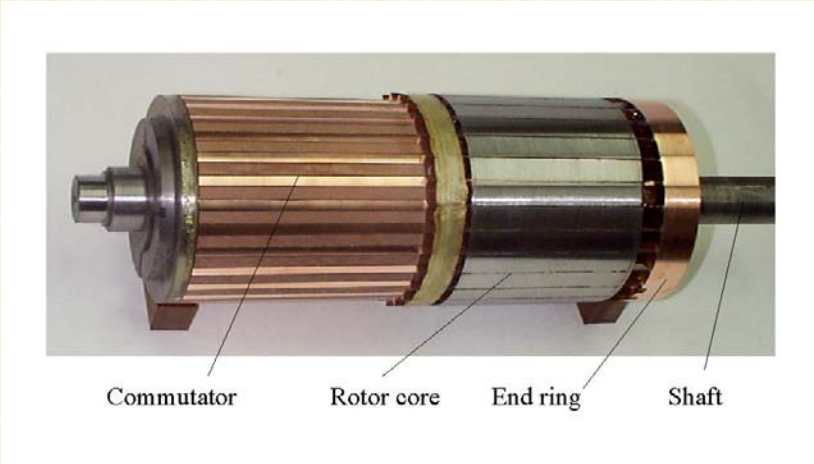

Soft Commutated dc Motor

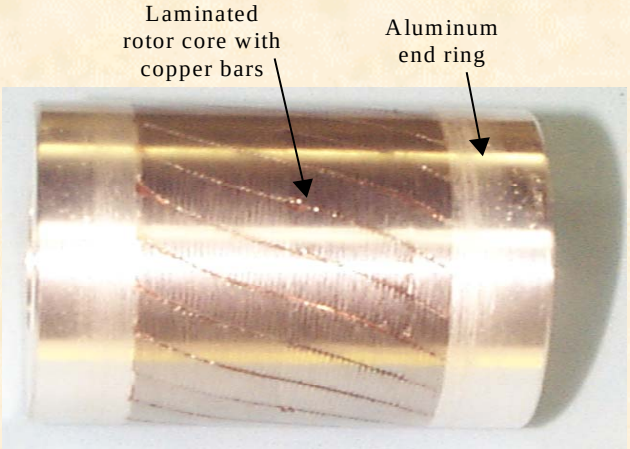

Copper-Aluminum Joining

PEEMRC Principals

Pam Abbott
PEEMRC Secretary

Laura Marlino
FreedomCAR
Program Manager

PEEMRC Manager
Don Adams

Dr. John McKeever,
Research Advisor

Sharon Fritz
Admin.
Assistant

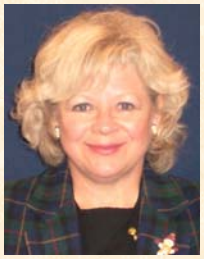

Prof. Emerit.
Milton Bailey
PM Motor
Design
And Control

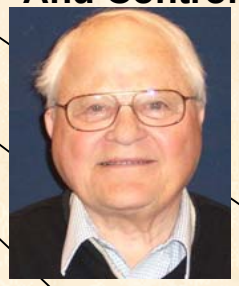

Dr. Matt Scudiere
Digital Control

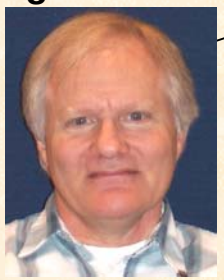

Dr. Gui-Jia Su
Inverter R&D

Dr. John Hsu,
Motor R&D and
Thermal Management

Prof.
Leon Tolbert,
DC-to-DC Conv.

Prof.
Jack Lawler
Simulation
And Control

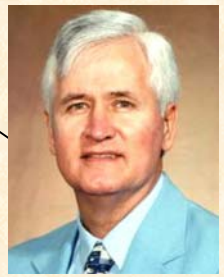

Cliff White
Electronics
Tech Staff

Curt Ayers
Mech. Engineer

Sam Nelson
Project Manager

Dr. Burak Ozpineci
SiC Devices

George Ott
Special Projects
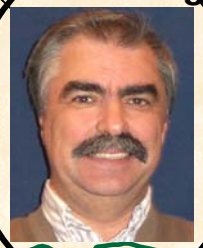
Dr. Pedro Otaduy
Motor & Thermal
Modeling