Precision Measurements with a Single Trapped Electron

Brian D'Urso

G. Gabrielse
Brian Odom
David Hanneke
Ramon van Handel

Harvard University / Oak Ridge National Laboratory

Properties of the Electron

- charge:

  $e = 1.602176462(63) \times 10^{-19}$ C $\qquad |q_{e^+} - q_{e^-}|/e < 4 \times 10^{-8}$

- mass:

  $m = 9.10938188(72) \times 10^{-31}$ kg $\qquad |m_{e^+} - m_{e^-}|/m < 8 \times 10^{-9}$

- electric dipole moment:

  $d = 1(1) \times 10^{-48}$ C m

- g factor:

  $g = 2.0023193043737(82)$ $\qquad |g_{e^+} - g_{e^-}|/g < 4 \times 10^{-12}$

  by Van Dyck, 1987.

$$\vec{\mu} = \frac{g}{2}\left(\frac{e}{m}\right)\vec{S}$$

relates $\vec{\mu}$ = magnetic moment and $\vec{S}$ = spin

most precise mesurement in 1998 CODATA (Rydberg $\pm 7.6 \times 10^{-12}$)

The Electron g Factor

- QED connects g factor to α:

$$a = \frac{g-2}{2} = C_1\left(\frac{\alpha}{\pi}\right) + C_2\left(\frac{\alpha}{\pi}\right)^2 + C_3\left(\frac{\alpha}{\pi}\right)^3 + C_4\left(\frac{\alpha}{\pi}\right)^4 + \cdots$$

- Precision of C_k (calculated) and measurements:

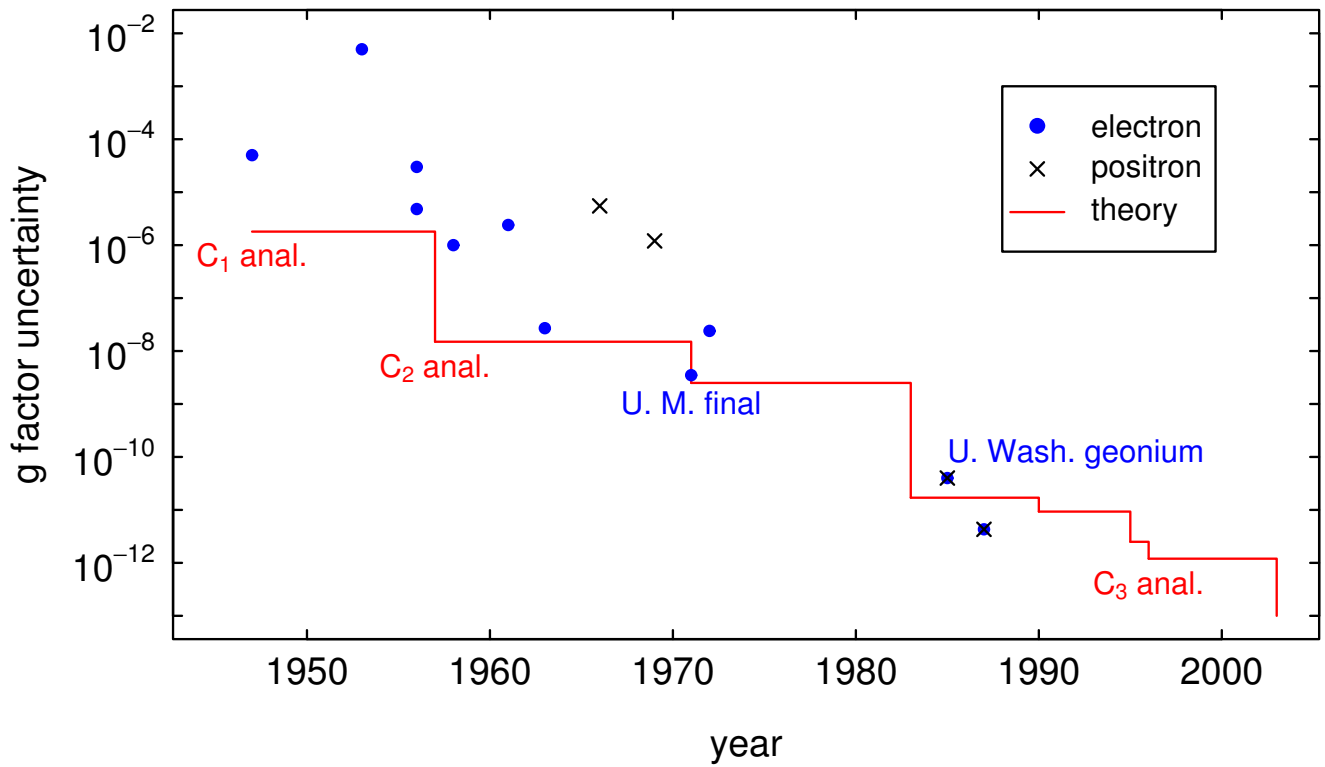

The Fine Structure Constant

- Compare measurements of $\alpha = \frac{\mu_0 c\, e^2}{2h}$ relative to 1998 CODATA value:

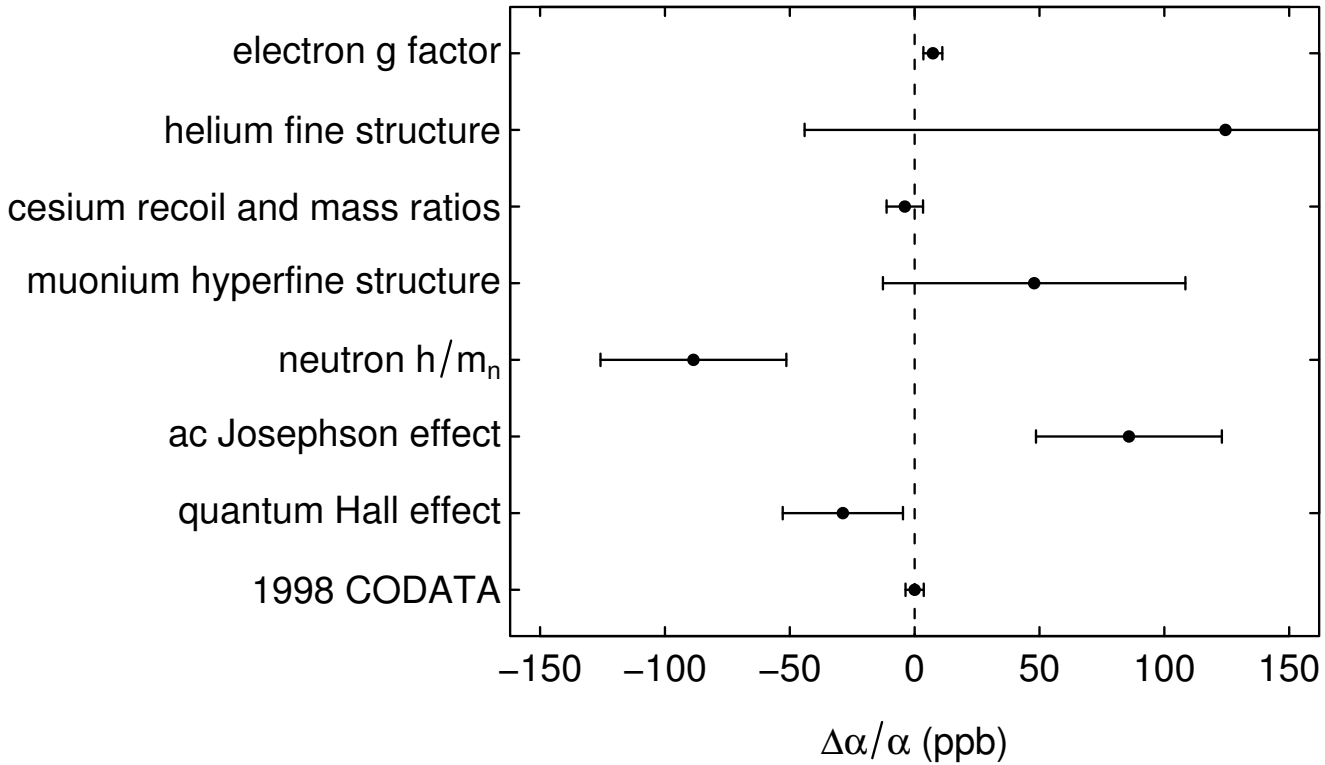

- Correction (2003) of theory shifted electron g factor result by 6 ppb.

A Single Electron in a Penning Trap

- A Penning trap consists of a strong homogeneous magnetic field and a weak electrostatic quadrupole field.
- Three harmonic motions result from combined fields:

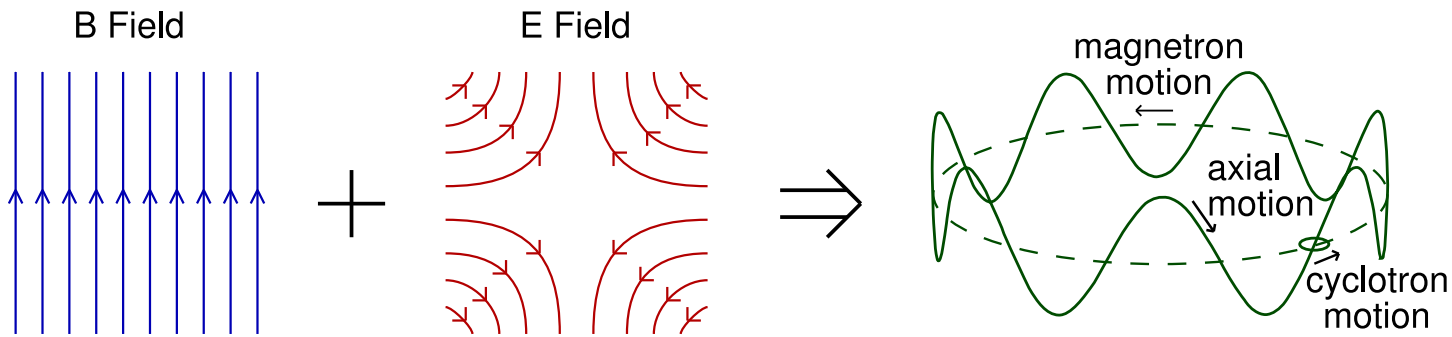

Transition:	Frequency:	$h\nu/k_b$:	Damping:
Magnetron	$\nu_m = 11.85$ kHz	$\frac{h\nu_m}{k_b} = 0.57\ \mu$K	$\frac{\gamma_m}{2\pi} \approx 10^{-15}$ Hz
Axial	$\nu_z = 64.42$ MHz	$\frac{h\nu_z}{k_b} = 3.1$ mK	$\frac{\gamma_z}{2\pi} \approx 5$ Hz
Cyclotron	$\nu_c = 146.5$ GHz	$\frac{h\nu_c}{k_b} = 7.0$ K	$\frac{\gamma_c}{2\pi} \approx 0.02$ Hz
Spin	$\nu_s = 146.7$ GHz	$\frac{h\nu_c}{k_b} = 7.0$ K	$\frac{\gamma_s}{2\pi} \approx 10^{-12}$ Hz

Cyclotron Motion

- Circular motion in magnetic field.
- Weakly perturbed by electric field.
- $\nu_c = \frac{1}{2\pi}\frac{eB}{mc} = 146$ GHz

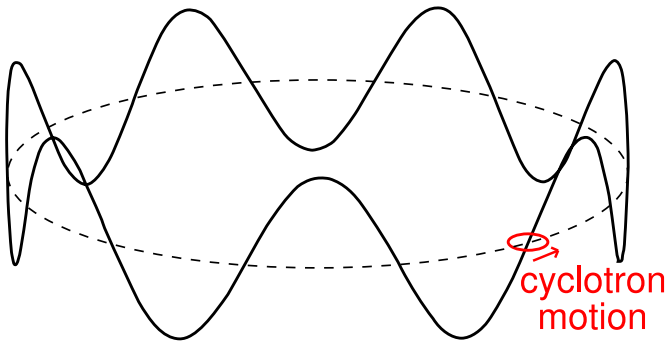

- Damped by synchrotron radiation (in free space $\tau_c \approx 0.1$ s).
- Decay rate modified by surrounding structure.
- Frequency modified by surrounding structure (cavity shifts).
  - A leading systematic in previous g factor measurement.

Axial Motion

- Simple harmonic motion parallel to magnetic field.
- Nearly independent of magnetic field.
- $\nu_z = \frac{1}{2\pi}\sqrt{\frac{eV_0}{md^2}} = 64$ MHz
- Damped very weakly by synchrotron radiation ($\tau_z \sim 10^6$ s).

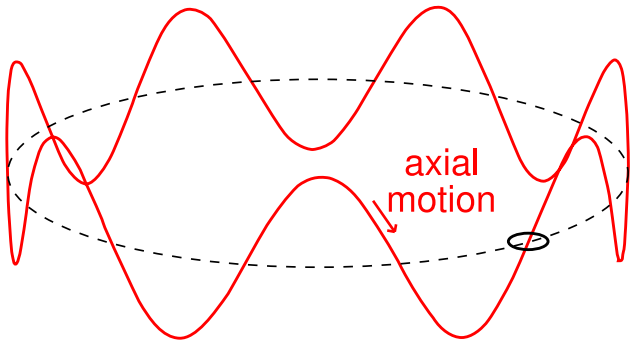

Magnetron Motion

- Circular motion ($\vec{E} \times \vec{B}$ drift).
- $\nu_m = \frac{1}{2\pi}\frac{V_0 c}{2B} = 14$ kHz

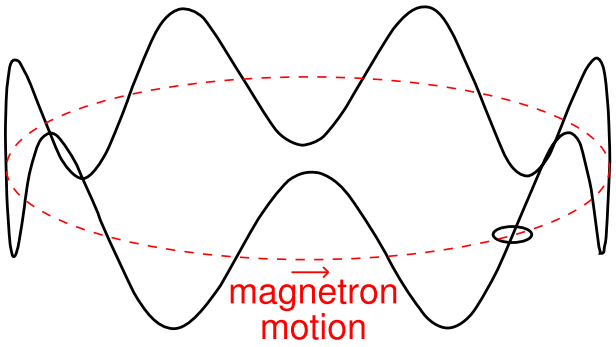

- Motion is metastable:
  - It is energetically favorable to increase in size.
- Essentially undamped by synchrotron radiation ($\tau_m \sim 10^8$ years).
- Can be "cooled" into the axial motion to stabilize.

Measuring g-2

- Electron g factor relates $\vec{\mu}$ = magnetic moment and $\vec{S}$ = spin:

$$\vec{\mu} = \frac{g}{2}\left(\frac{e}{m}\right)\vec{S}$$

- Measure as:

$$g = 2\,\frac{\nu_s}{\nu_c} = 2\left(1 + \frac{\nu_a}{\nu_c}\right) \approx 2\left(1 + 10^{-3}\right)$$

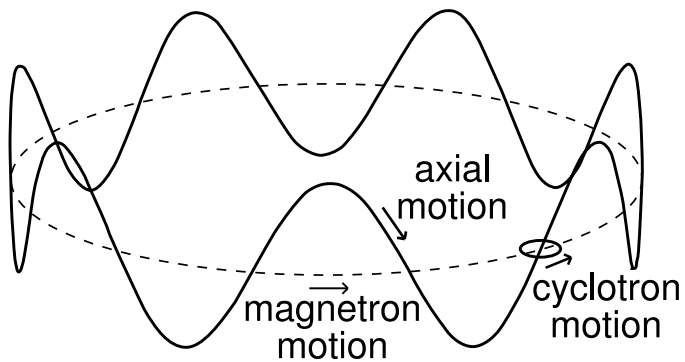

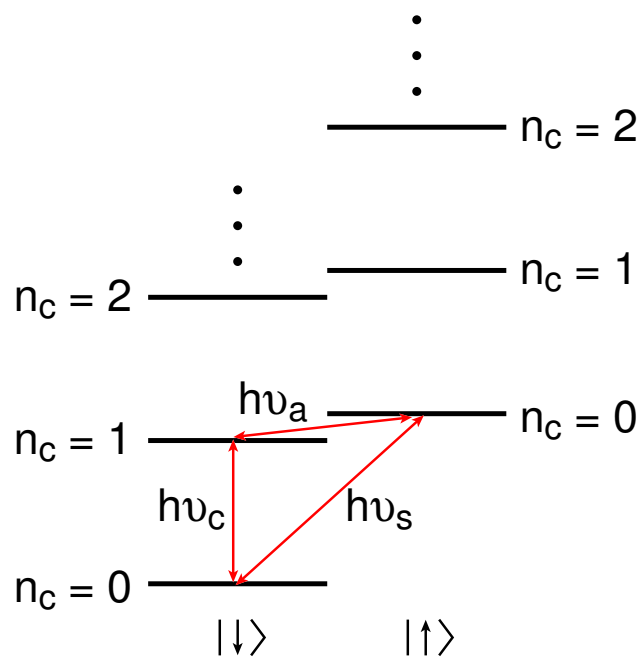

Cylindrical Penning Trap

- Implemented trap is cylindrical and acts as high Q microwave cavity to suppress spontaneous emission by cyclotron motion.
- Voltage on compensation electrodes tuned to make trap harmonic.
- Electrons loaded off of tungsten field emission point.

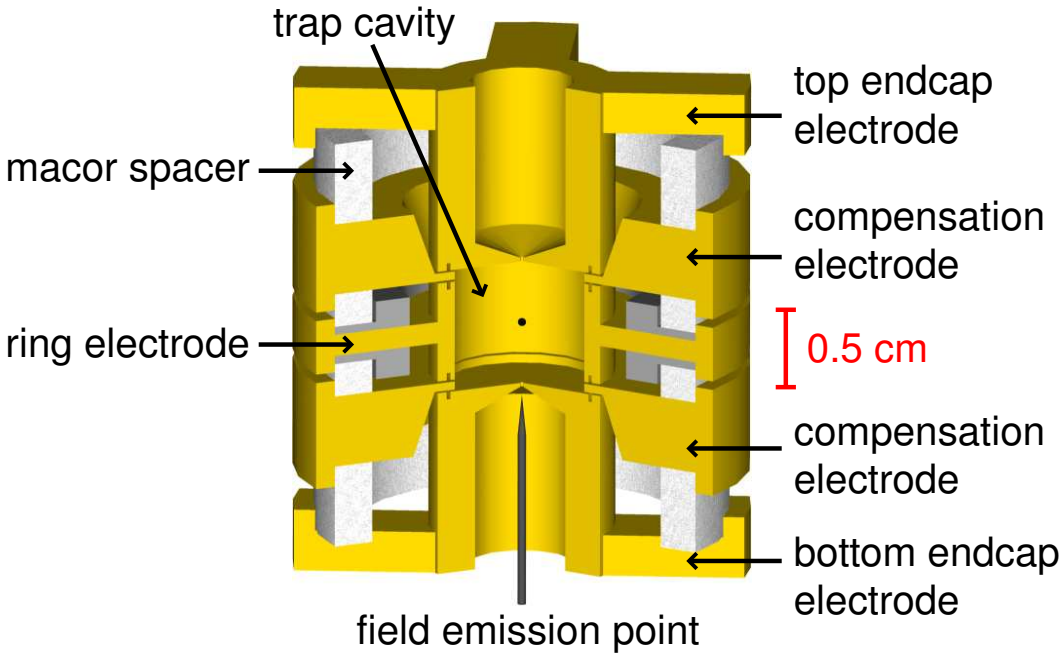

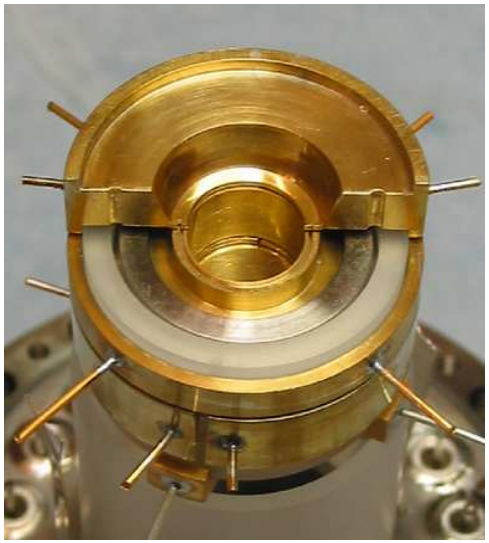

Dilution Refrigerator

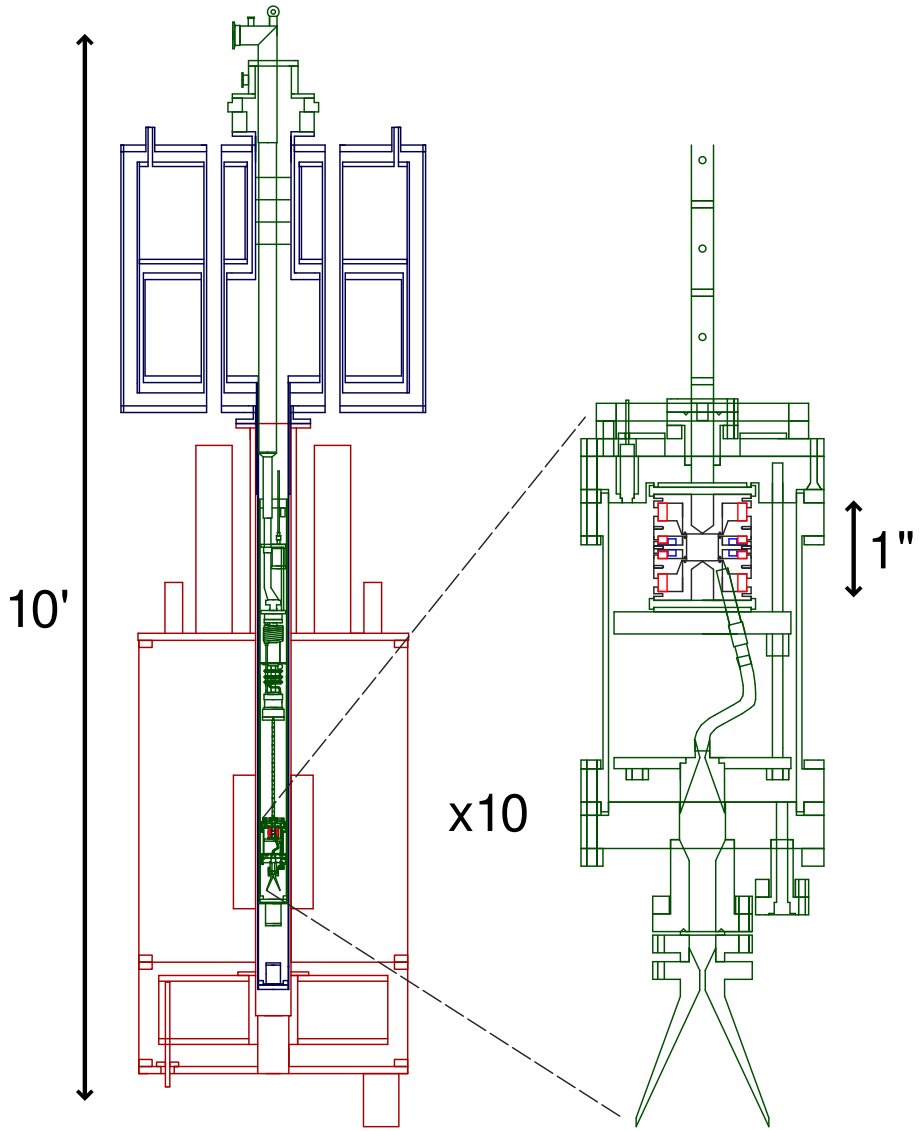

- Base temperature 100 mK.
- Cooling power 50 μW.
- Gives $\bar{n}_c = 0$.
- Cools other motions?
- μ-waves injected from below.

How do we know it is one electron?

Cyclotron motion and spin:

- Radius of cyclotron motion is only ~ 10 nm.
- Cyclotron frequency is 146 GHz
  $\Rightarrow$ difficult to make low noise amplifiers!
- Spin is even more difficult since it is magnetic dipole transition.

Magnetron motion:

- Motion is spatially large and slow ($1 - 100$ kHz).
- Detection would likely damp motion which is metastable
  $\Rightarrow$ particle would fall out of trap (radially).

Axial motion:

- Frequency ($20 - 200$ MHz) is usable.
- Amplitude can be $\sim 100\ \mu$m.
- Does not give any information about cyclotron or spin state!

Detecting the Axial Motion

- All monitoring is done through axial motion, which is damped and detected with a cryogenic amplifier:

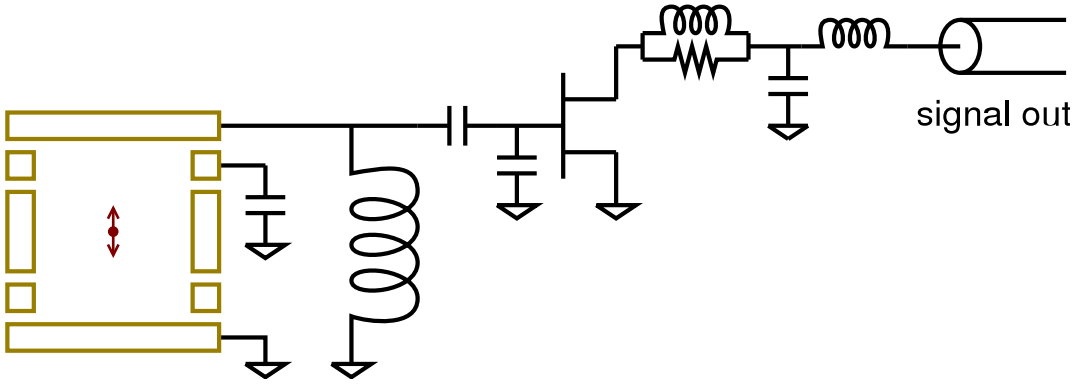

- Axial motion driven to get larger response:

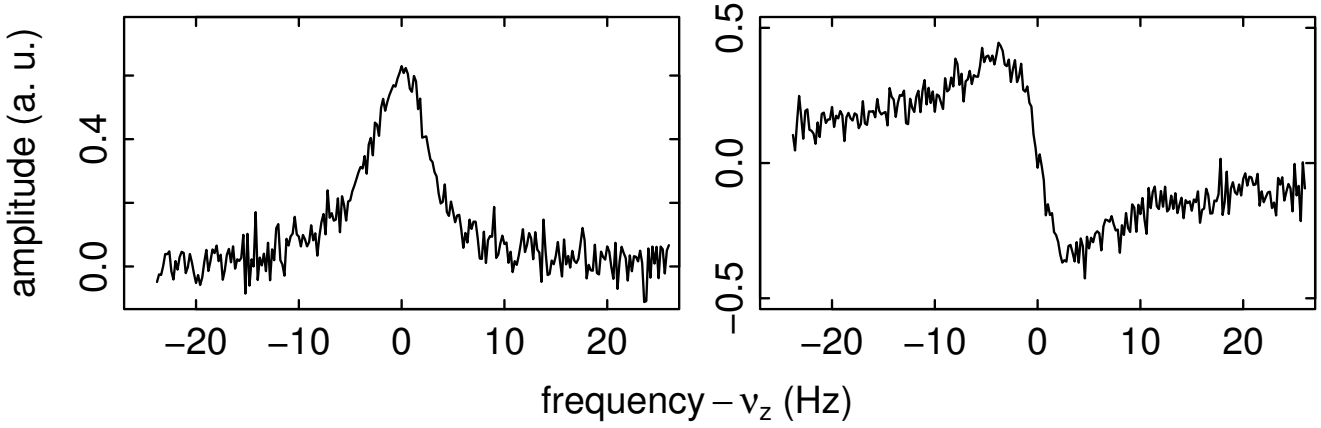

Measuring the Cyclotron and Spin State

- We seek to couple spin and cyclotron state to axial motion.
- Small quadratic variation in magnetic field introduced with a nickel ring (magnetic "bottle"):

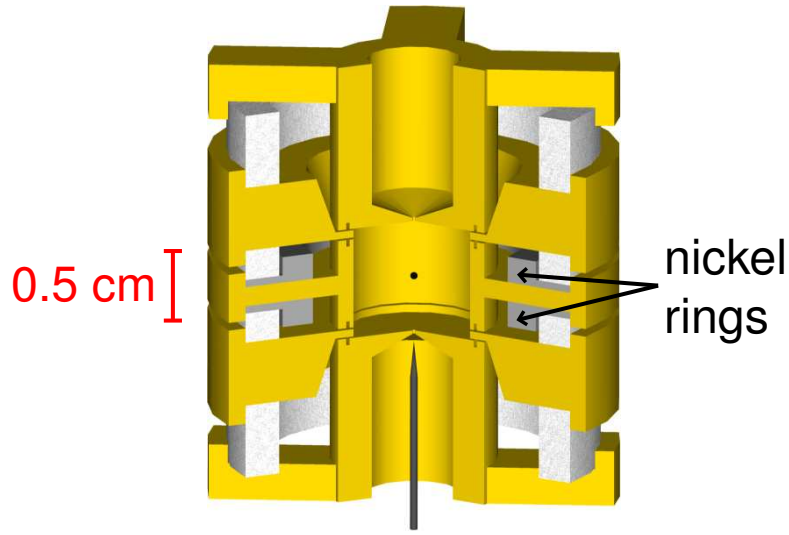

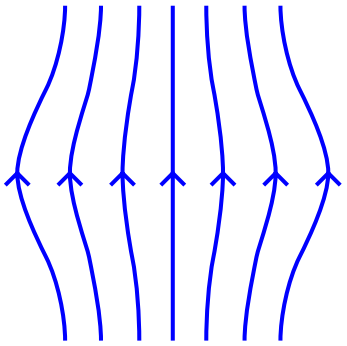

- Classically, there is a change in the "spring constant" of axial oscillator, detected as a change in oscillation frequency $\delta_c = 12$ Hz.

Quantum Jump Spectroscopy

- Continuously track axial frequency to monitor cyclotron and spin state.
- Detection of quantum jumps of cyclotron state:

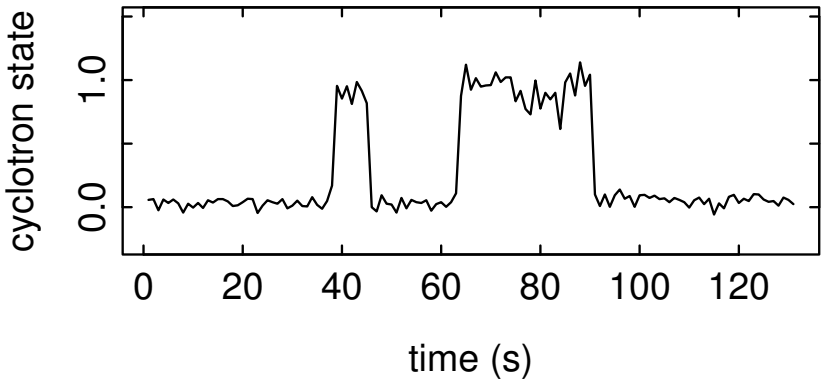

- Long excited state lifetime gives enough time for detection.
- Dilution refrigerator cools cyclotron motion back to ground state.
- Map out cyclotron and anomaly response with "quantum jump spectroscopy".
- Use only lowest cyclotron states $\Rightarrow$ no relativistic shift.

Consequences of Coupling

- Quantum mechanically, the coupling interaction is:

$$H' = \hbar\delta\left(n_c + \tfrac{1}{2}\right)\left(n_z + \tfrac{1}{2}\right)$$

- This is a quantum non-demolition (QND) measurement.
- Theoretical lineshapes at different γ_z/δ and $\bar{n}_z$:

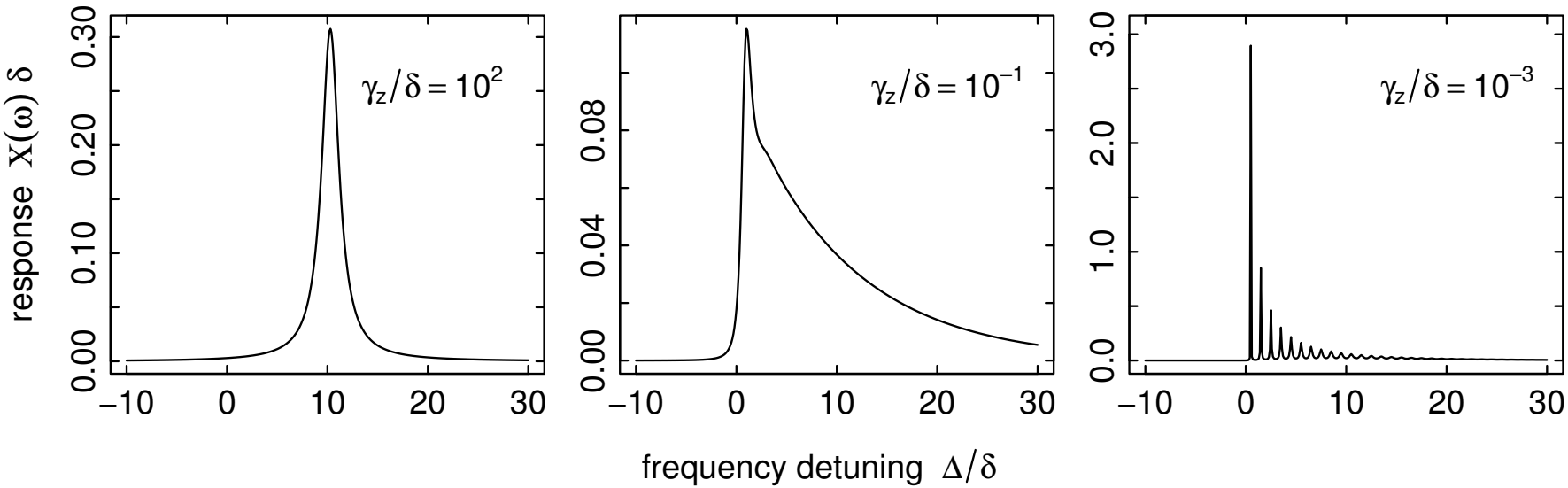

- Use exponential tail to measure axial temperature.

Large Linewidth Problem

- Axial temperature measured to be 16 K with 100 mK environment $\Rightarrow$ 320 ppb cyclotron linewidth.
- We would like to measure ν_c and ν_a to 0.1 ppb.

How can we decrease the linewidths?

- Reduce axial temperature.
  - Improve amplifier heat sinking.
  - Electronic feedback to cool axial motion.
- Reduce bottle coupling.
  - Must detect smaller axial frequency shifts.
- Increase axial frequency ν_z.
  - Quantum jump size $\sim 1/\nu_z$.
  - Linewidths $\sim 1/\nu_z^2$.
  - Need new higher frequency amplifiers.

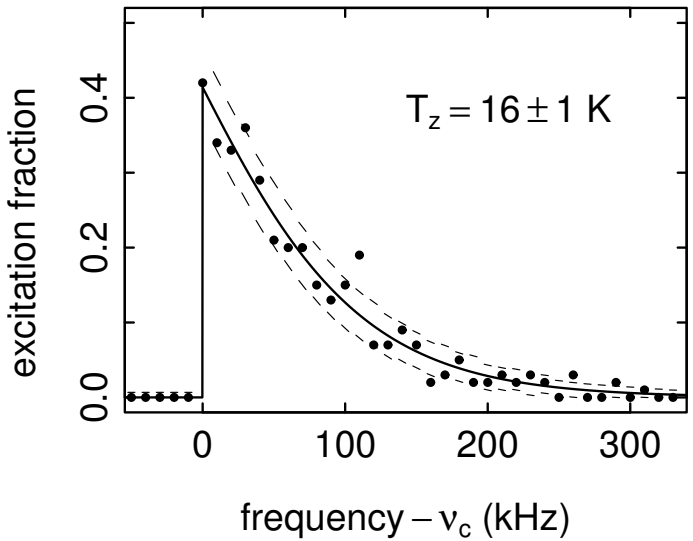

Feedback Cooling

- Axial temperature of electron is modified by feeding back detected signal.
- Feedback gives effective temperature T_e and effective axial damping γ_z.
- Noiseless limit:

$$T_e = T_z\,(1 - G)$$

- Extra noise limits cooling:

$$T_e = T_z\left(1 - G + \frac{G^2}{1-G}\frac{V_G^2}{V_t^2}\right)$$

where V_G is extra noise in feedback in addition to thermal noise V_t.

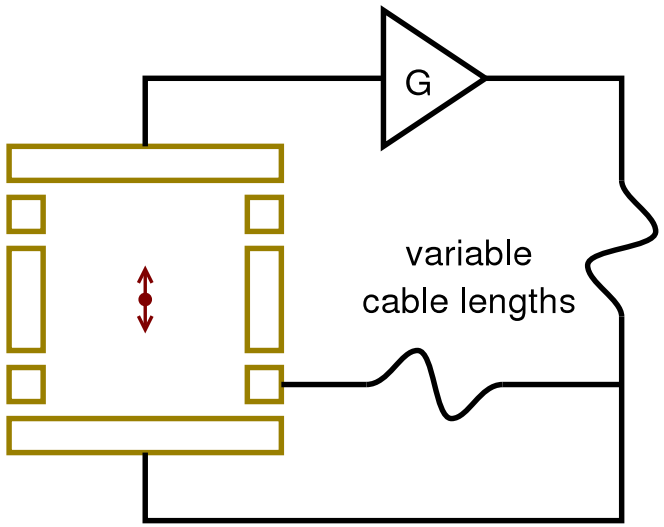

- Phase of drive is adjusted with variable length of cable.
- Drive added to cancel direct coupling of feedback to amplifier.

Feedback Modified Temperature

- Width of cyclotron spectrum is used to determine axial temperature:

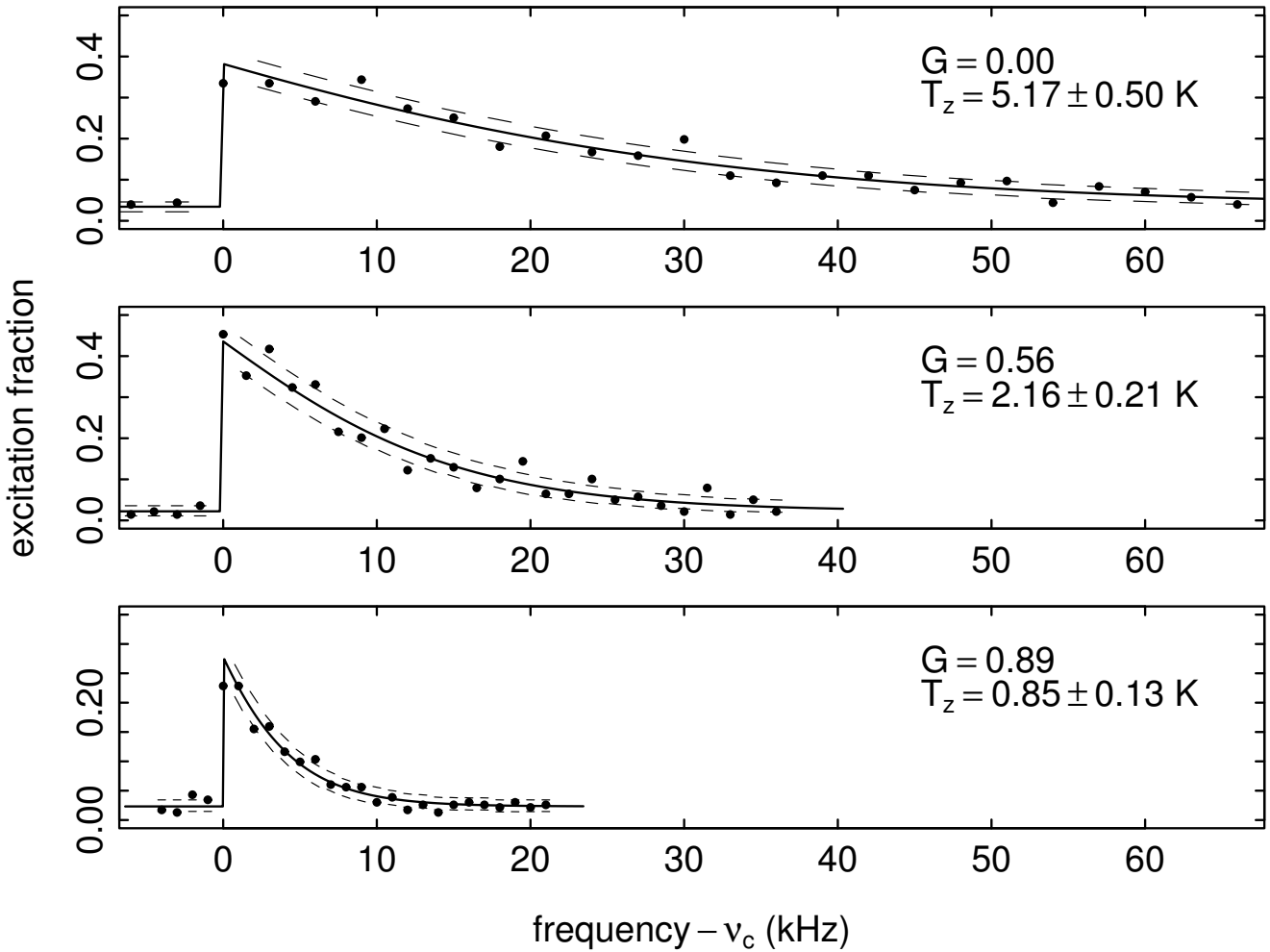

Feedback Cooling Results

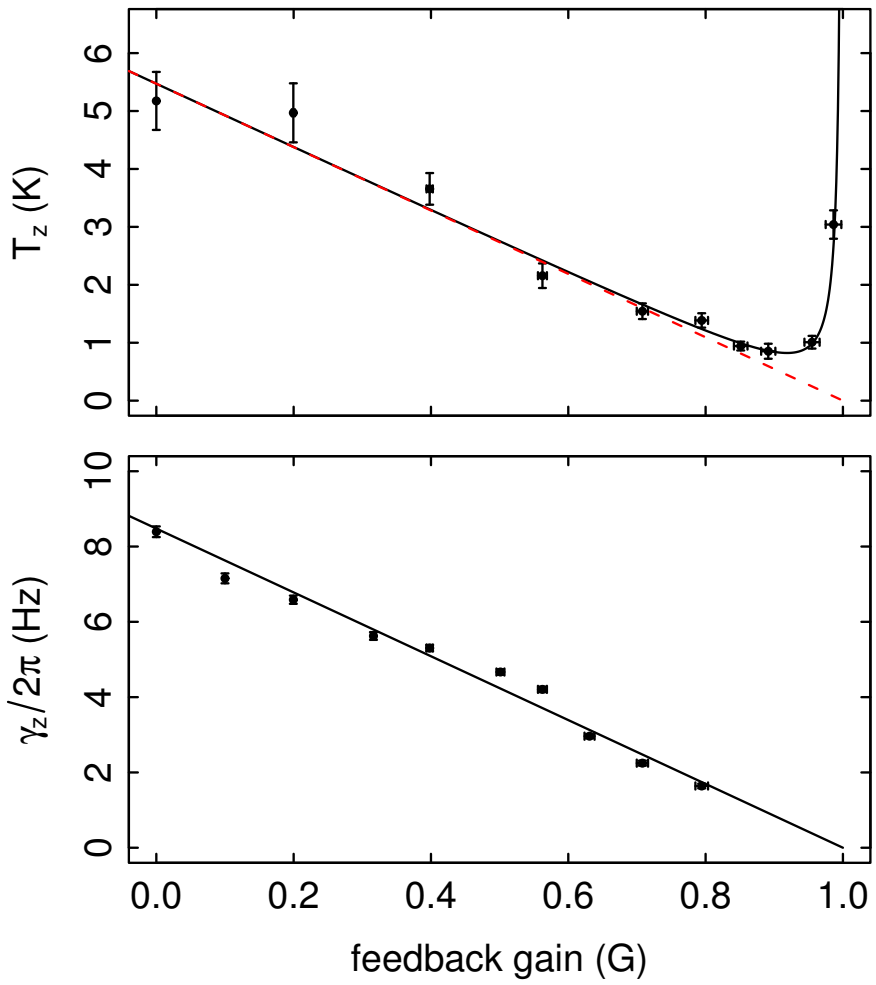

- Axial temperatures:
  - Initial 5 K.
  - Ambient 1.6 K.
  - Lowest 850 $\pm$ 130 mK.
- No dilution refrigerator needed.
- Extra noise prevents indefinite cooling.

B. D'Urso, B. Odom, and G. Gabrielse, Phys. Rev. Lett. **90** 043001 (2003)

Tracking the Axial Frequency

- Difficulties of axial detection:
  - Only have ~ 1 s to determine frequency, need ~ 1 s to see axial response.
  - Axial motion is significantly anharmonic (but adjustable).
- Multiple stationary drives:
  - Good for detecting large known frequency jumps.
  - Anharmonicity causes nonlinearities if drives are too close together.
- Phase-locked loop:
  - Slow, especially for large jumps.
  - Can lose lock if too aggressive.
- Self-excitation:
  - Stabilizes anharmonic response at any amplitude.
  - Can it be controlled?

Self-Excitation

- Start with same setup as feedback cooling.
- Axial equation of motion:
  $\ddot{z} + \gamma_z \dot{z} + \omega_z^2 z = F_d(t)/m$
- Positive feedback force:
  $F_d(t) = Gm\gamma_z \dot{z}(t)$

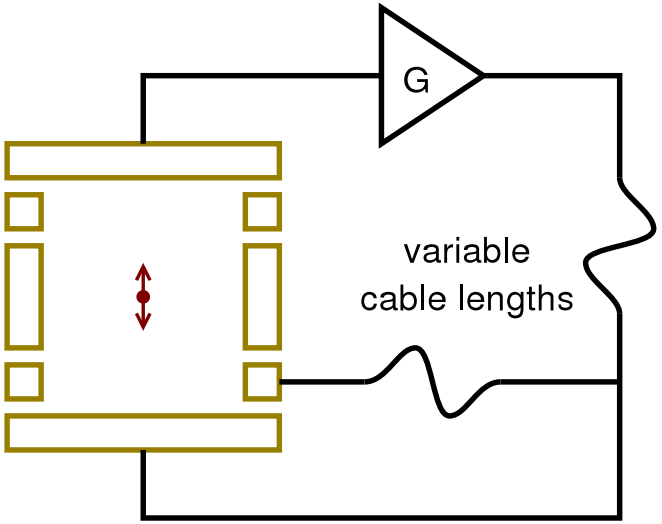

- Result is exponentially growing or decaying oscillation:
  $z(t) = A_0 e^{(G-1)t} e^{i\omega_z t} = A(t) e^{i\omega_z t}$
- Must tune $G = 1$ exactly for stable self-excitation.
- Need an automatic gain control system:
  $G \to G(A)$, where $G(A) = 1$ at stable amplitude.

DSP Limited Self-Excitation

- Analyze signal and adjust gain to stabilize self-excitation amplitude.
- Processing must be real time, computer control (LabView) is too slow!
- Use dedicated TMS320F2812 digital signal processor (DSP).

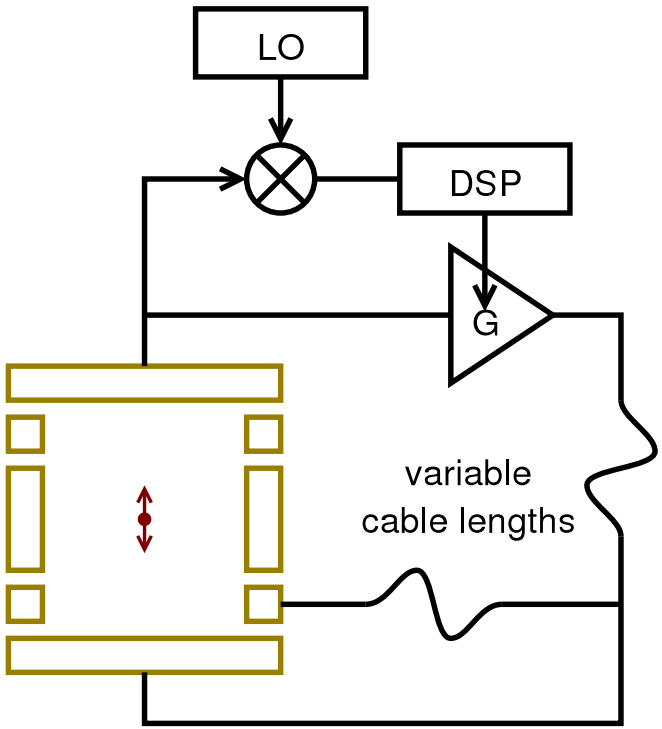

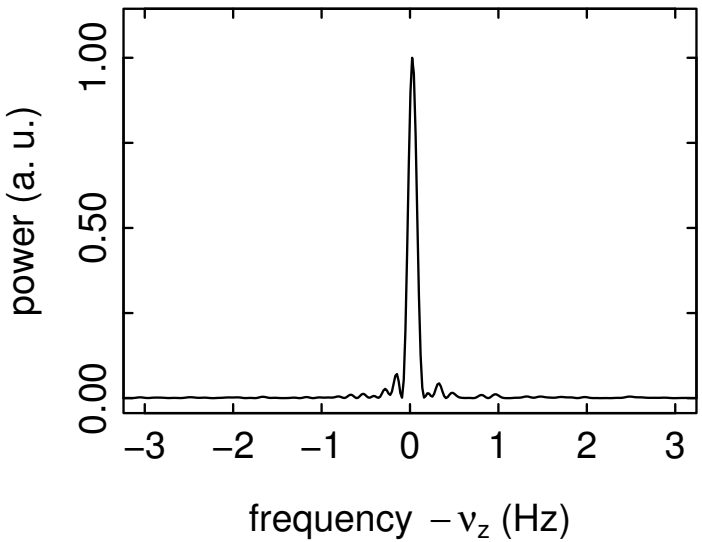

Self-Excitation Stability

- Excellent frequency stability:
- Allows decrease in bottle size.
- Large jumps (up to $n_c = 10$) detected.

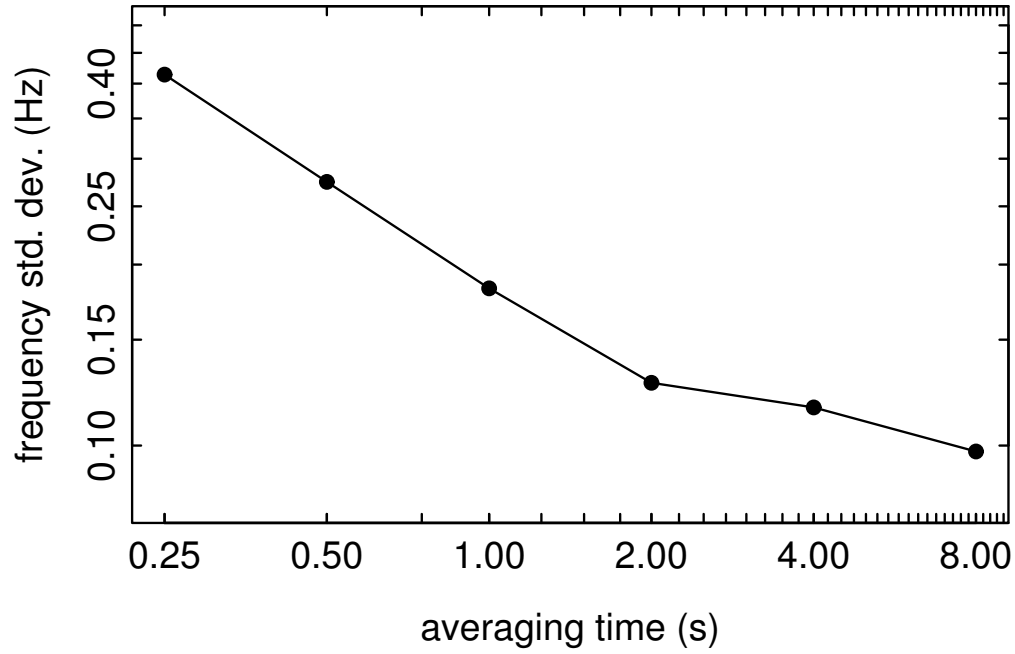

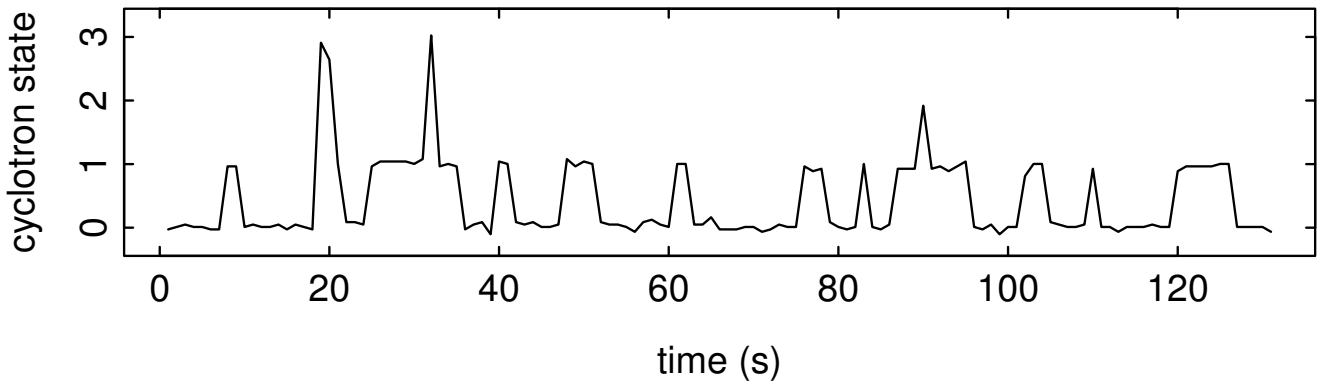

Improved Linewidths

- Reduced axial temperature:
  16 K $\longrightarrow$ 0.6 K.
- Increased axial frequency ν_z
  from 64 MHz to 200 MHz.
- Cyclotron linewidth reduced to $\sim$ 2 ppb.

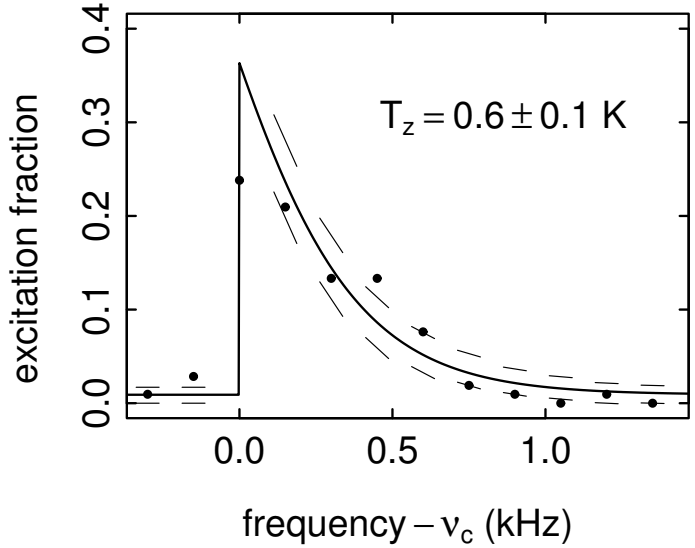

- We would like to measure ν_c and ν_a to 0.1 ppb.
- Further improvements ahead:
  - Continue to reduce axial temperature.
  - Reduce bottle coupling.

Magnetic Field Stability

Potential sources of drift:

- Ambient magnetic field fluctuations:
  - Shielded by magnet by factor of ~ 150.
- Cryogen behavior:
  - Cryogen reservoir pressures regulated.
- Dilution refrigerator base temperature:
  - Dependence was ~ 5 ppb/mK at 100 mK due to nuclear spins.
  - Replace copper with silver, titanium, molybdenum
    $\Rightarrow \quad < 0.03$ ppb/mK
- Room temperature:
  - Dependence is > 1 ppb/K.
  - Regulate air temperature around experiment.

Conclusions

- Experiment changes decreased cyclotron and anomaly linewidths by ~ 200 since 1998. (expect another factor of 10)
- Elegant demonstration of feedback cooling.
- DSP limited self-excitation is a robust and time efficient means of monitoring axial frequency.
- Advantages over 1987 measurement:
  - Cyclotron and anomaly linewidths expected ~ 50 times narrower.
  - Anomaly transition easier to drive with lower axial temperature and higher axial frequency.
  - Quantum jump spectroscopy $\Rightarrow$ no relativistic shift.
  - Cyclotron cavity shifts easily understood.
- Ultimate accuracy expected: $\Delta g/g \sim 1 \times 10^{-13}$.