Developing a Risk-Based Design Optimization Tool for IRIS

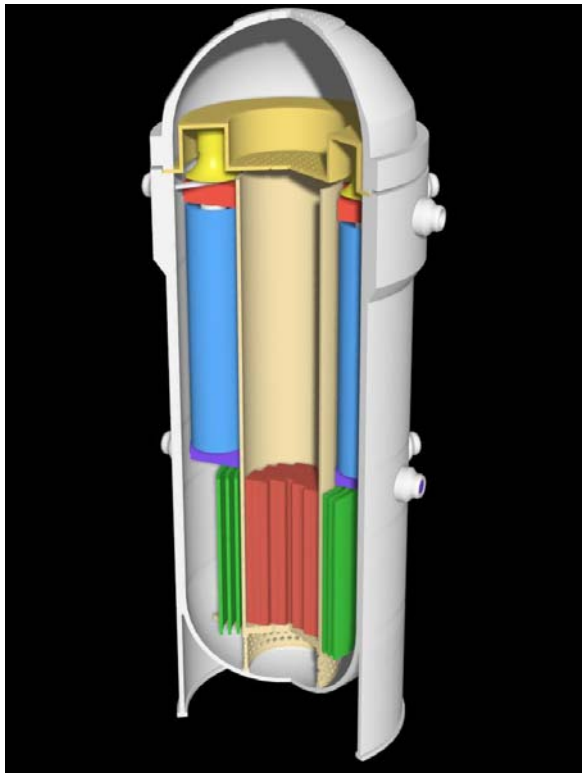

Presented to GENES4 Conference

Kyoto, Japan

Michael D. Muhlheim, Ph.D.

Oak Ridge National Laboratory

September 16, 2003

ornl

Oak Ridge National Laboratory

Benefits to the IRIS Program through the Use of a Risk-Based Design Program

- Assess baseline reliability, safety, and cost (through PRA)
- Focus attention and resources on the most critical systems
- Measure impact and improve consistency of trade-off studies
- Measure sensitivity, uncertainty, and appropriateness of approaches and methods
- Make PRA insights observable to non-PRA analysts

ornl

Oak Ridge National Laboratory

OLD Method

NEW Method

A Risk-Based Design reduces, controls, or eliminates risk by quantitatively identifying risk drivers as the design develops and allows for subsequent design changes to reduce the risk to an acceptable level.

ornl

Oak Ridge National Laboratory

Maximizing the Benefits of a Risk-Based Design

- **The following must be available to designers:**
  - **Retention of all previous design alternatives**
  - **Capability to easily make changes between design alternatives**

- **The following example illustrates how the risk-based design optimization tool being developed by ORNL can maximize the benefits of the risk-based design approach that is being used for IRIS.**

ORNL is Developing a "One-Button" Method to Reduce Design Cycle Time and Improve System Reliability

Example: Evaluation of Automatic Depressurization System (ADS) and Emergency Heat Removal System (EHRS) Design

Design Trades

- Component choices
  - Type
  - Position
  - Failure data
- System architecture

Figures of Merit

- Aging
- Reliability
- Cost vs. Reliability
- Uncertainties and sensitivity

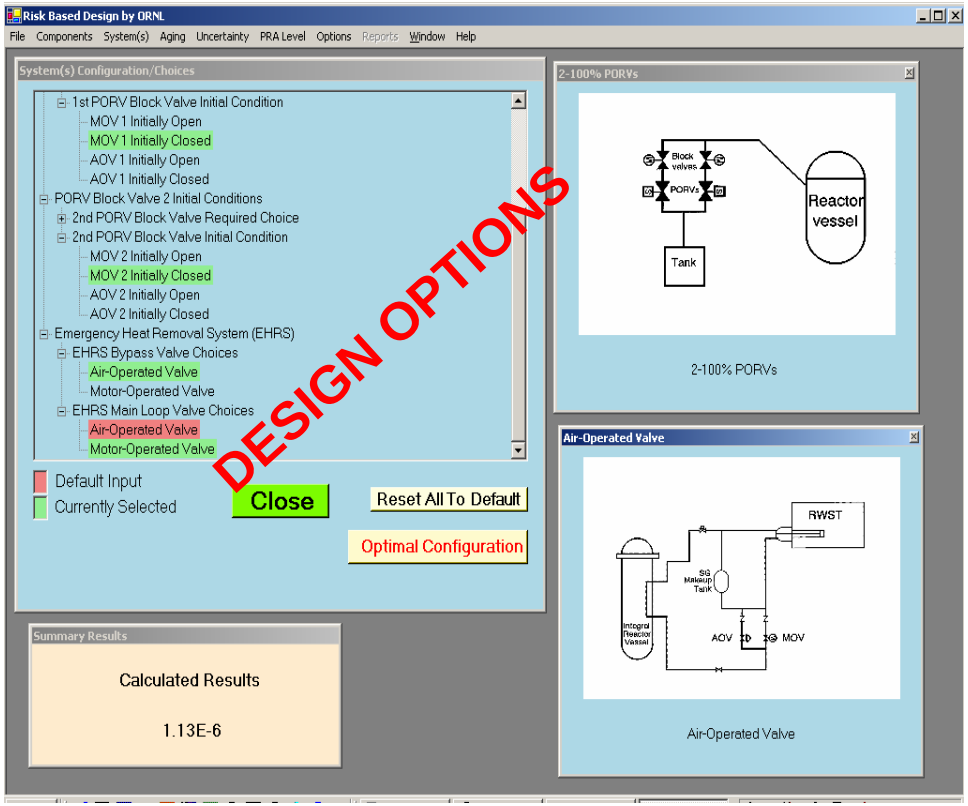

ornl

Oak Ridge National Laboratory

IRIS Safety Systems

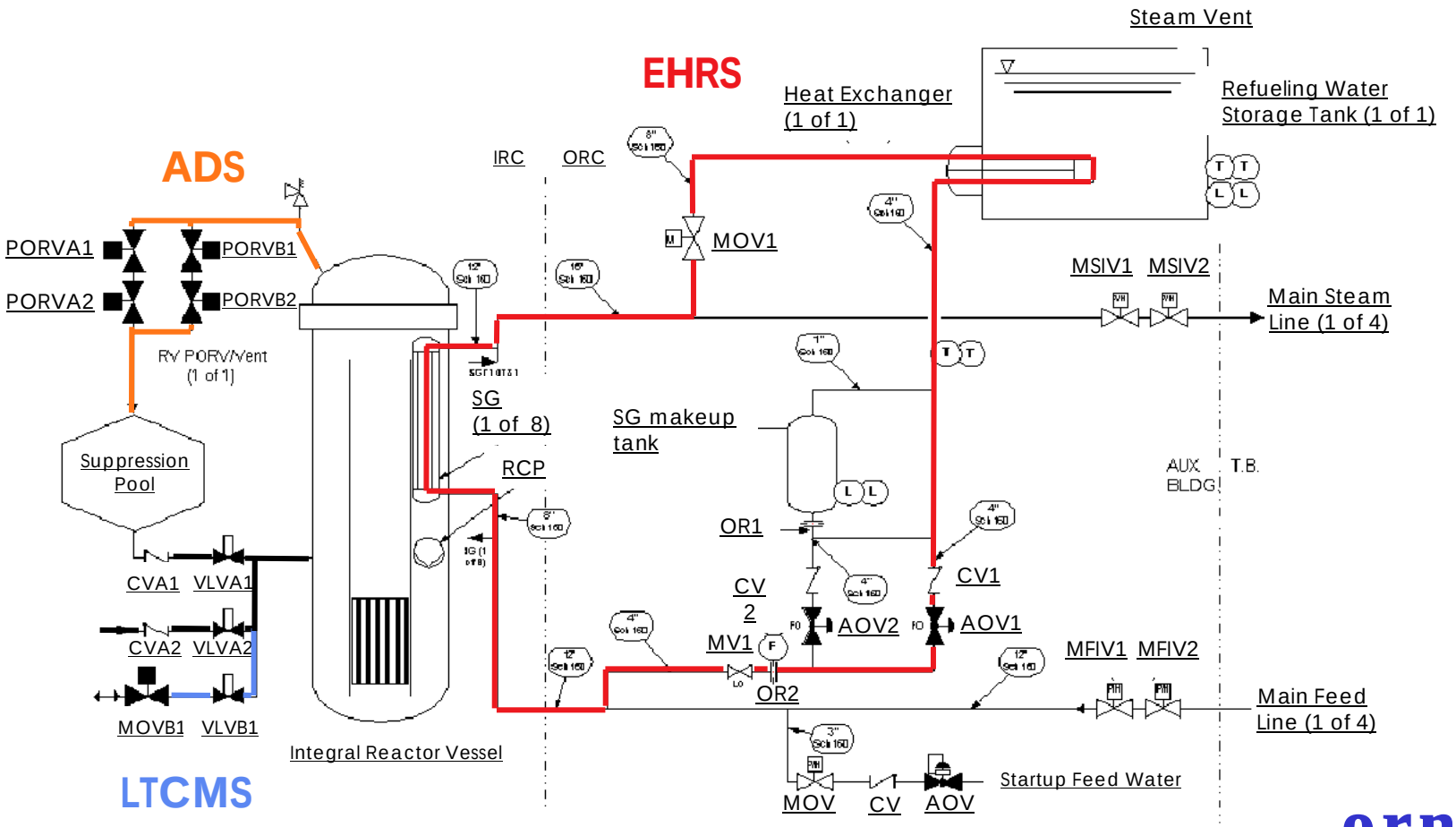

ornl

Oak Ridge National Laboratory

Relief Valve Options

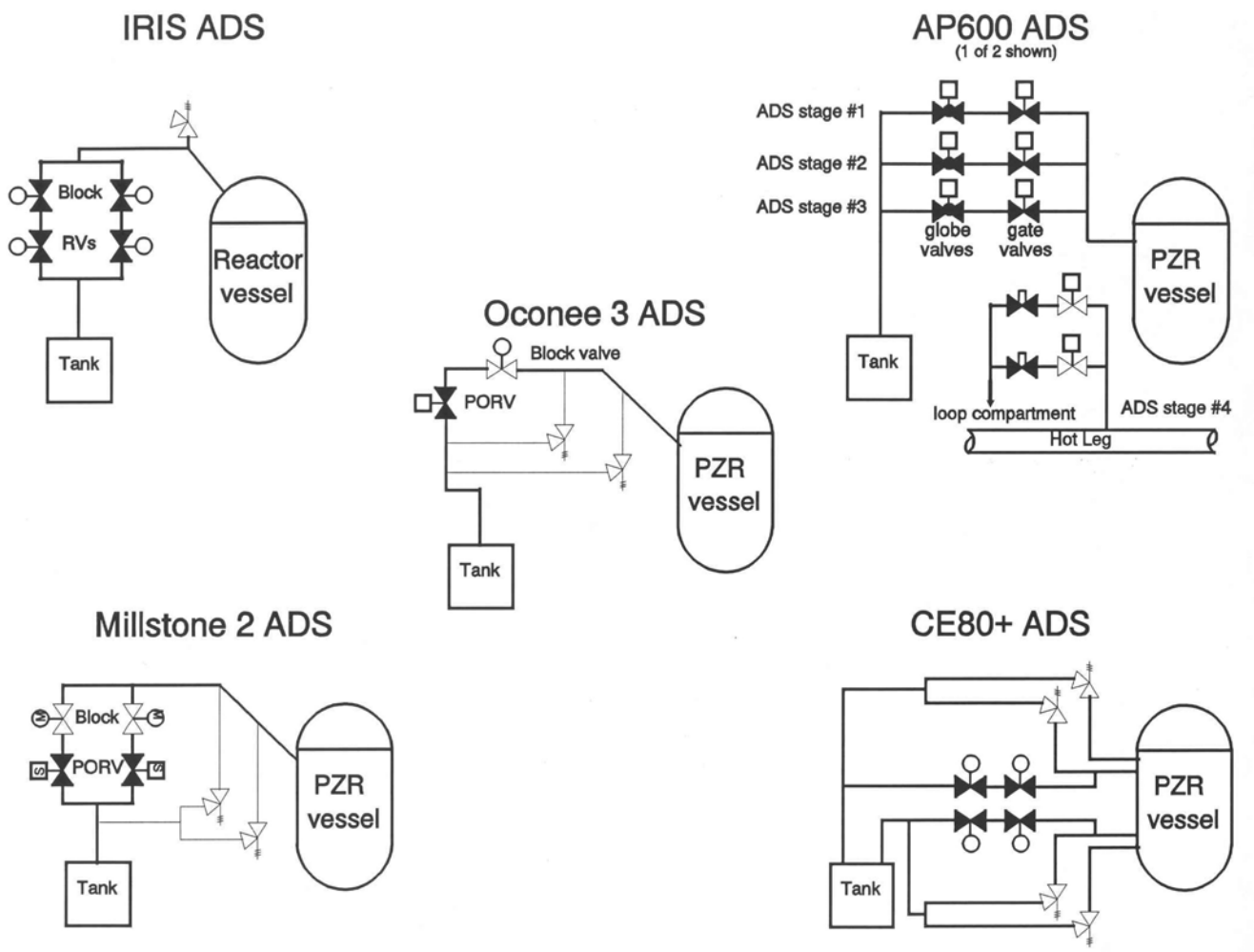

ornl

Oak Ridge National Laboratory

The Developmental Model Was Used to Identify the Optimal Design of the ADS

Bypass valves closed

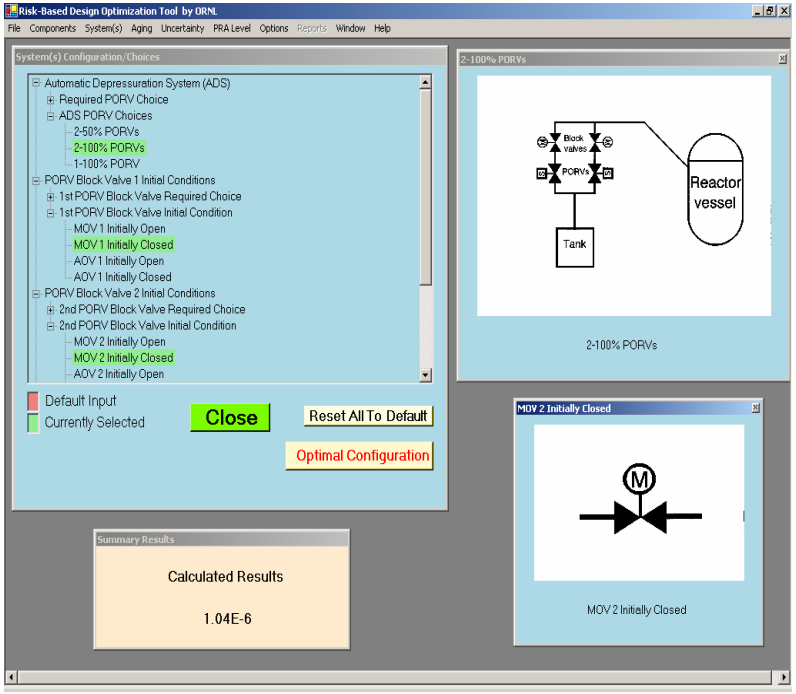

1-button architecture

Bypass valves open

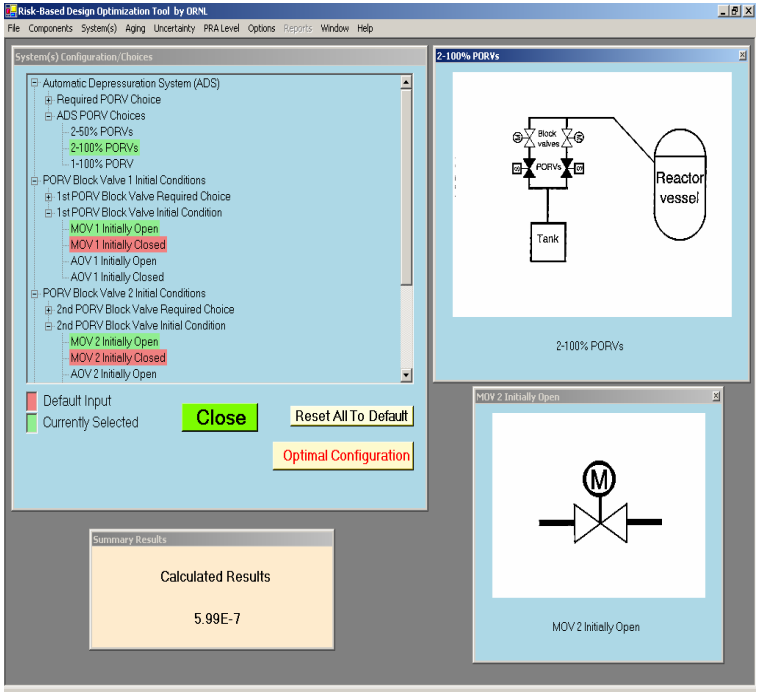

ornl

Oak Ridge National Laboratory

ADS Valve Options

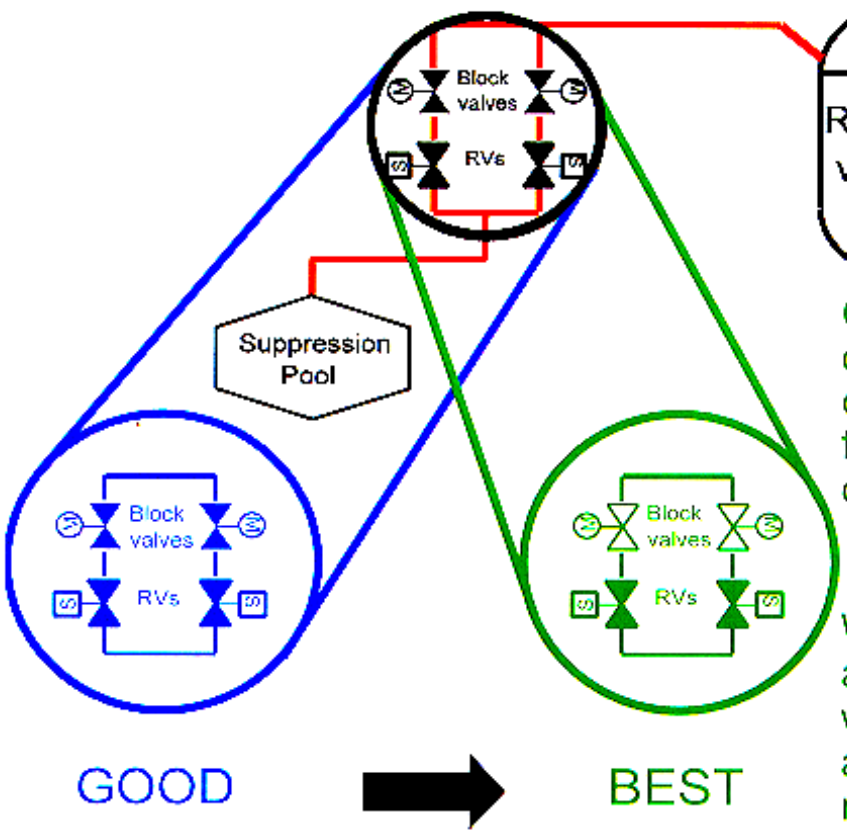

Changing the positions of the block valves from closed to open eliminates failures associated with opening the block valves

When the block valves are initially open, systems with AOVs or MOVs have about the same system reliability and CDF.

System reliability improves 20% and CDF lowered 3.5%

ornl

Oak Ridge National Laboratory

The Developmental Model Was Used to Identify the Optimal Design of the EHRS

Air-operated valves

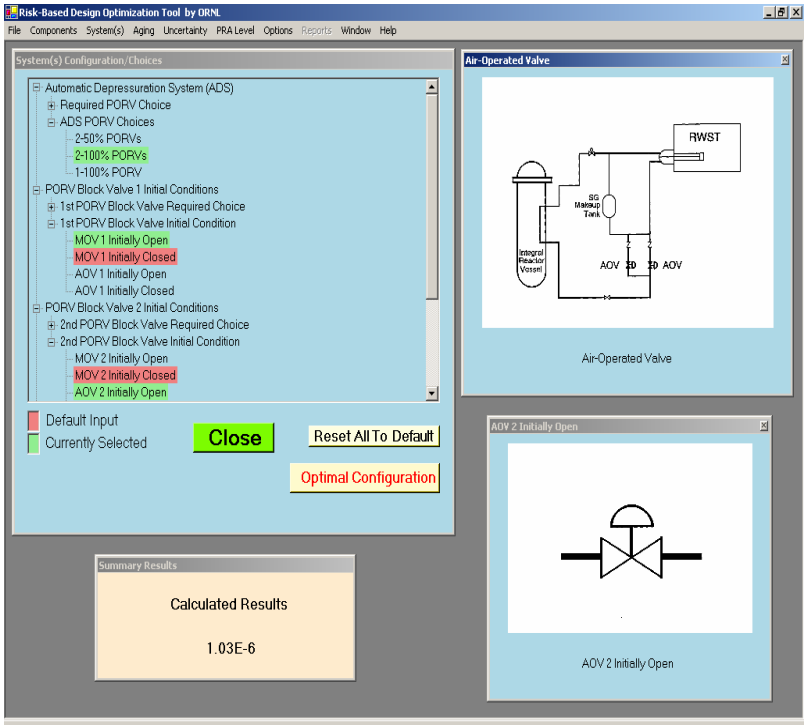

1-button architecture

Motor-operated valves

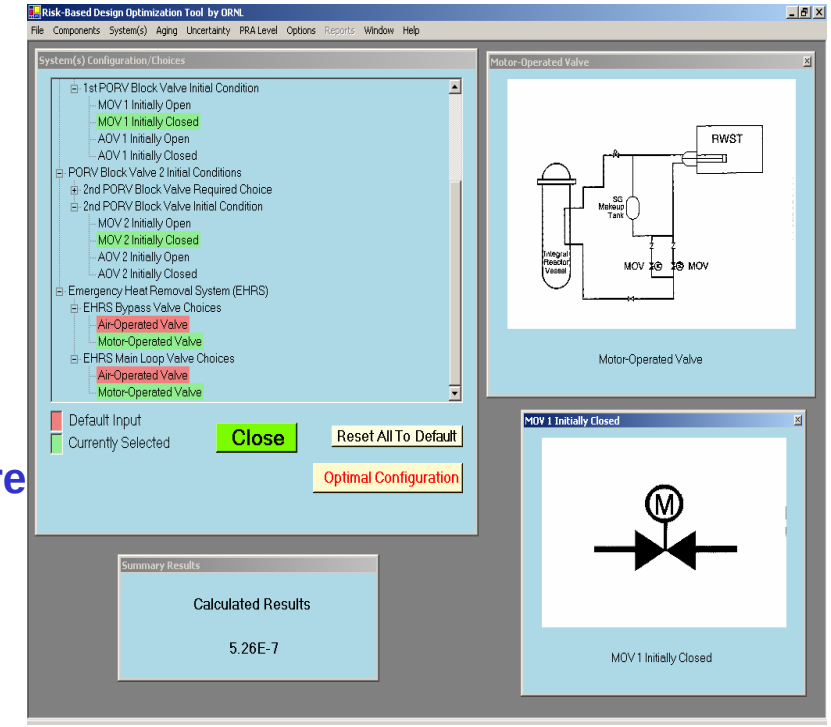

ornl

Oak Ridge National Laboratory

EHRS Valve Options

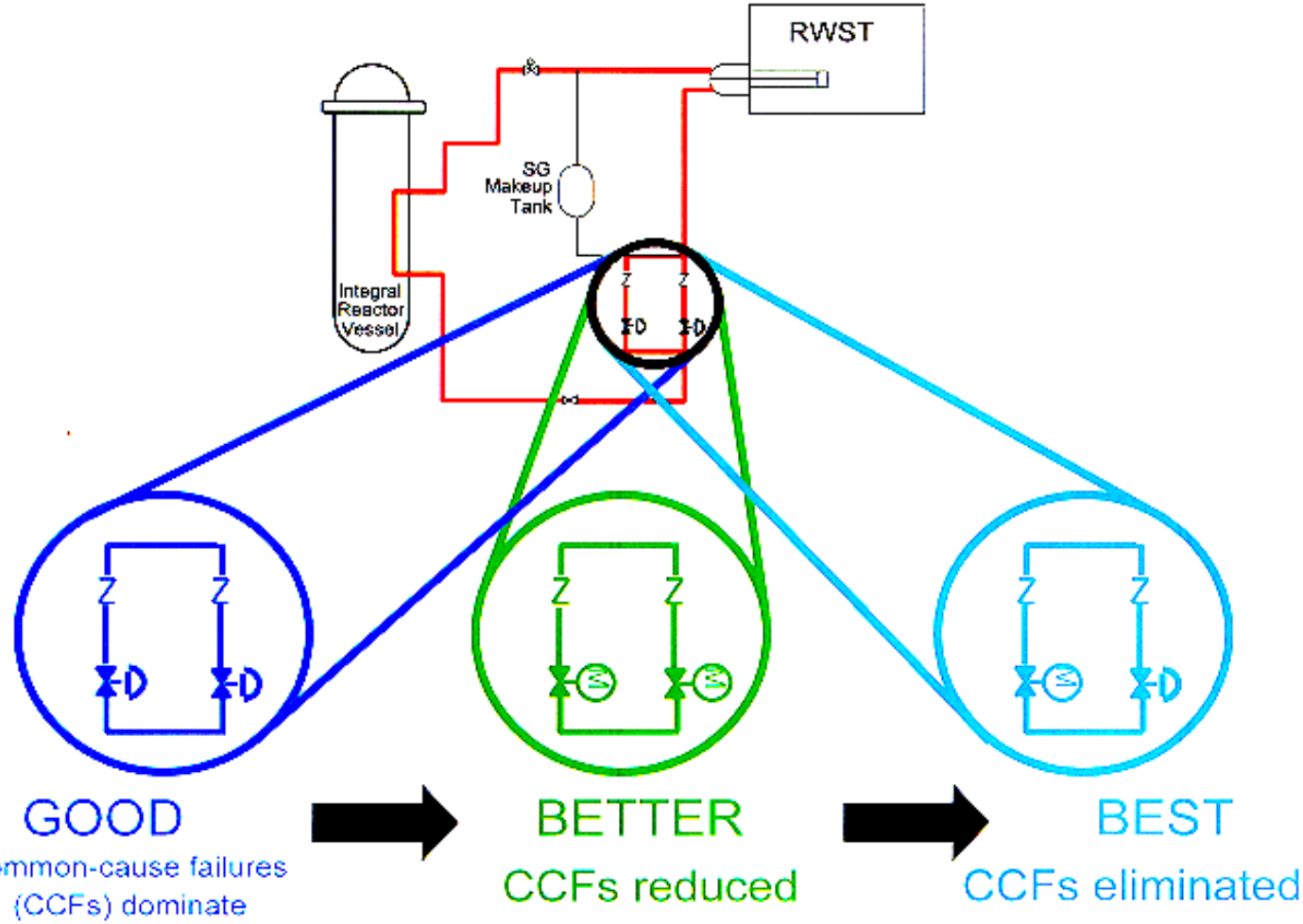

System reliability improves 42% and CDF lowered 23%

ornl

Oak Ridge National Laboratory

A Risk-Based System Analysis Shows Optimal ADS / EHRS System Configurations

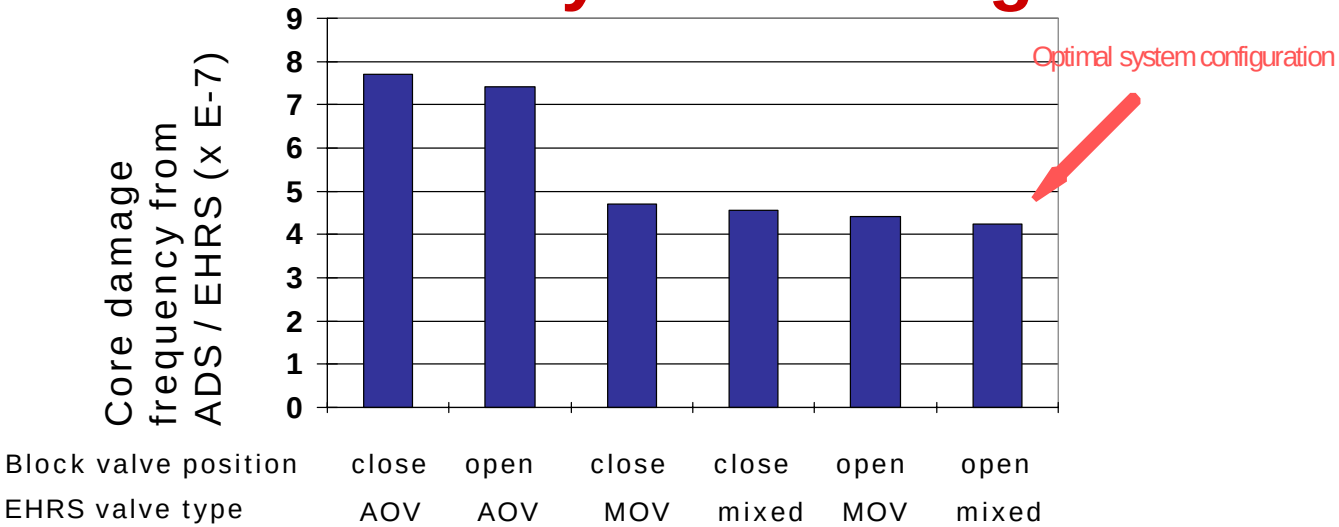

Configuration options

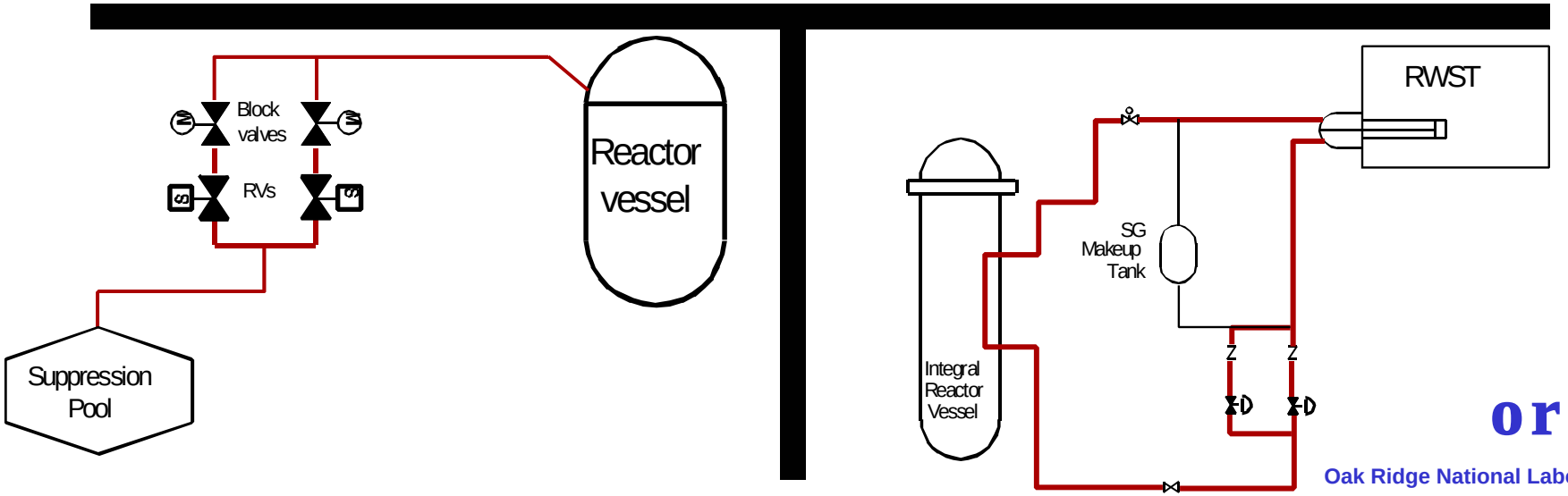

ornl

Oak Ridge National Laboratory

The 11 Component Choices Yield 160 Design Alternatives

- Number and capacity of relief valves (RVs) in the Automatic Depressurization System (ADS) (1-100%, 2-50%, 2-100% RVs)
- RV block valve position and type
- Type of valves in Emergency Heat Removal System (EHRS) main and bypass lines

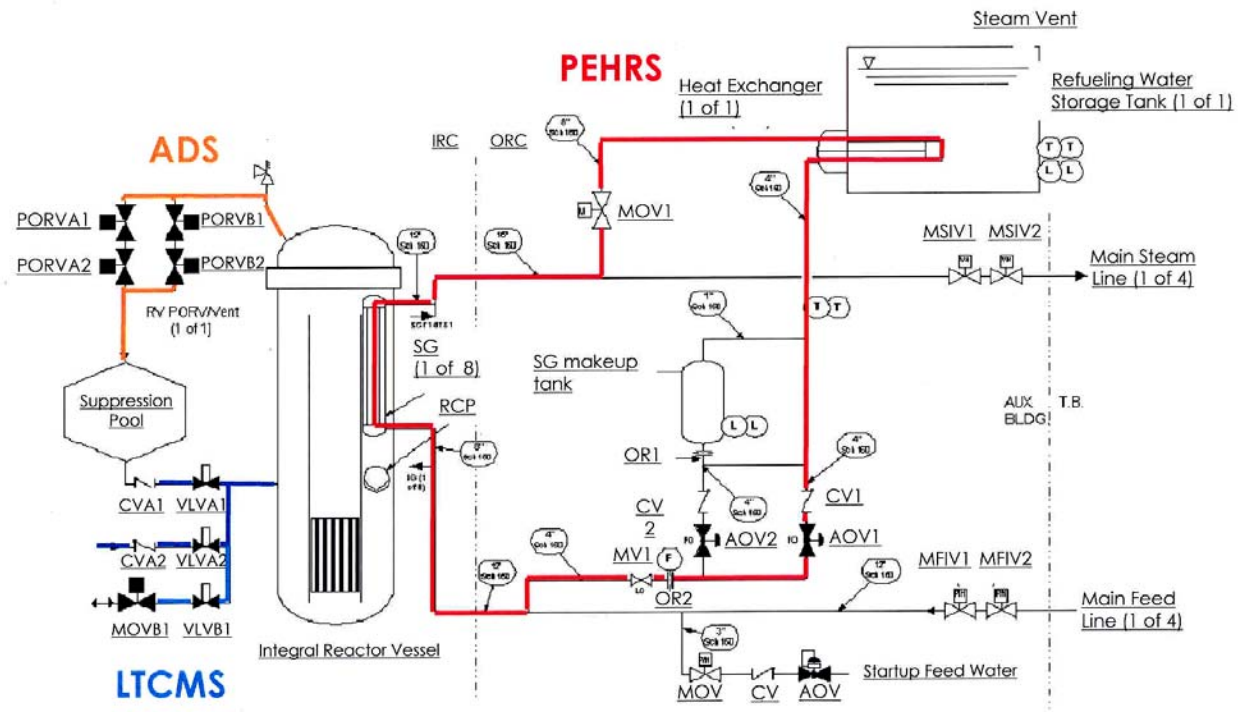

ornl

Oak Ridge National Laboratory

"Logical" Decisions for Optimization May Be Wrong

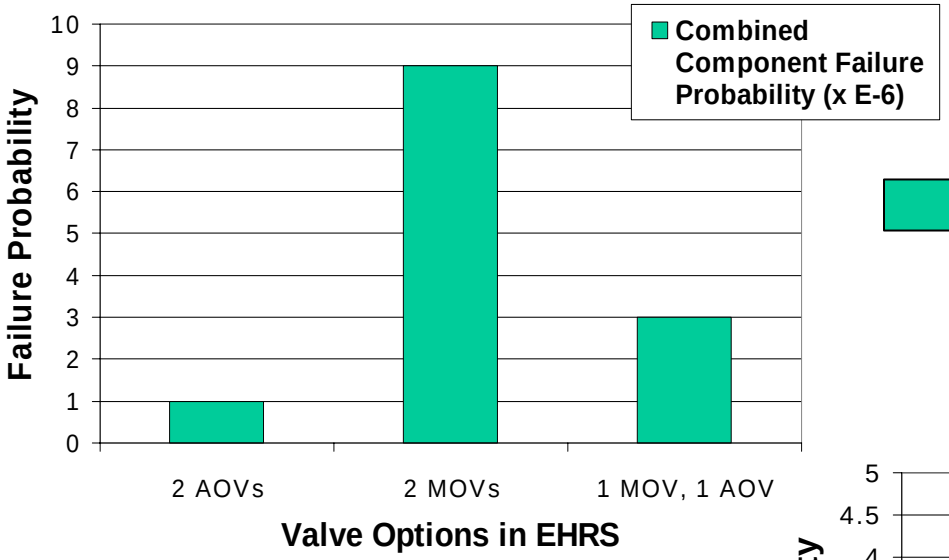

The air-operated valves (AOVs) are significantly more reliable than the motor-operated valves (MOVs).

The use of the most reliable valves resulted in the most unreliable system!

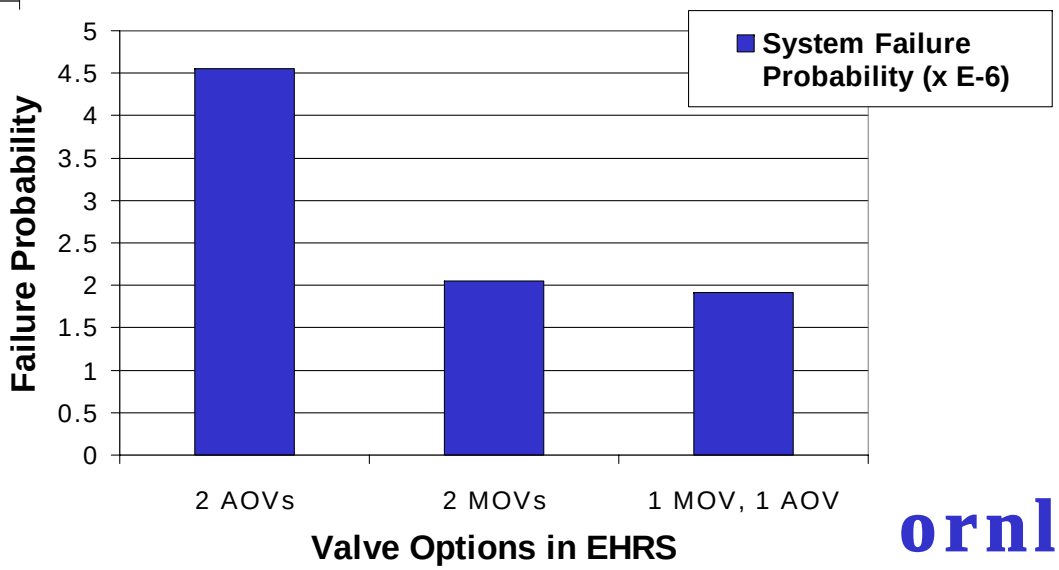

The MOV / AOV valve option is only slightly better than the 2 MOV option because the common-cause failure of the check valves is the dominant contributor to system failure.

ornl

Oak Ridge National Laboratory

Failure Modes Provide Clues on How System Can Be Improved

Dominant Minimal Cut Sets for ADS / EHRS systems	ADS block valves closed	ADS block valves closed	ADS block valves closed	ADS block valves open
	AOVs in EHRS	MOVs in EHRS	AOV / MOV in EHRS	AOV / MOV in EHRS
CCF of valves in EHRS				
Air- or Motor-operated valves	2.63E-6	Contribution 20X smaller	No longer a contributor	No longer a contributor
Check valves	1.82E-6	Unchanged	Unchanged	Unchanged
CCF of valves in ADS				
Block valves	2.68E-5	Unchanged	Unchanged	No longer a contributor
PORVs	1.90E-4	Unchanged	Unchanged	Unchanged
Minimal cut sets involving block valves failing to open	3.06E-5	Unchanged	Unchanged	No longer a contributor

Risk-Based Design Provides Early and Continuing Benefits

- Incorporates risk studies early in design phase — maximizes payoff
- Facilitates selection of optimal system design — performance vs. reliability

Benefits of a Risk-Based Design Are Many

- ORNLs Risk-Based Design Optimization Tool (RBOT) is a risk-based design tool that allows designers and non-PRA analysts to see the impact of changes real-time

- RBOT is not static; modules can be easily developed to replace existing systems/trains (all previous changes are not discarded but are available to be revisited)

- All aspects of safety are covered, not just the CDF (ORNL is developing RBOT to provide feedback on safety, reliability, aging effects, and maintainability of equipment in a pressure vessel that is "closed" for an extended fuel cycle)

- Trade-offs on cost can be made (i.e., large or small impacts on reliability can be measured against cost)

ornl

Oak Ridge National Laboratory