Observation of correlated-photon statistics using a single detector

Yoon-ho Kim and Warren P. Grice
Center for Engineering Science Advanced Research
Computer Science and Mathematics Division
Oak Ridge National Laboratory
Oak Ridge, TN 37831

ORNL is managed for the US DOE by UT-Battelle, LLC, under contract no. DE-AC05-00OR22725

Outline

- Background
- Motivation & Objectives
- Experiments and analysis
  - with Postselected two-photon state
  - with Postselection-free two-photon state
- Summary

Background

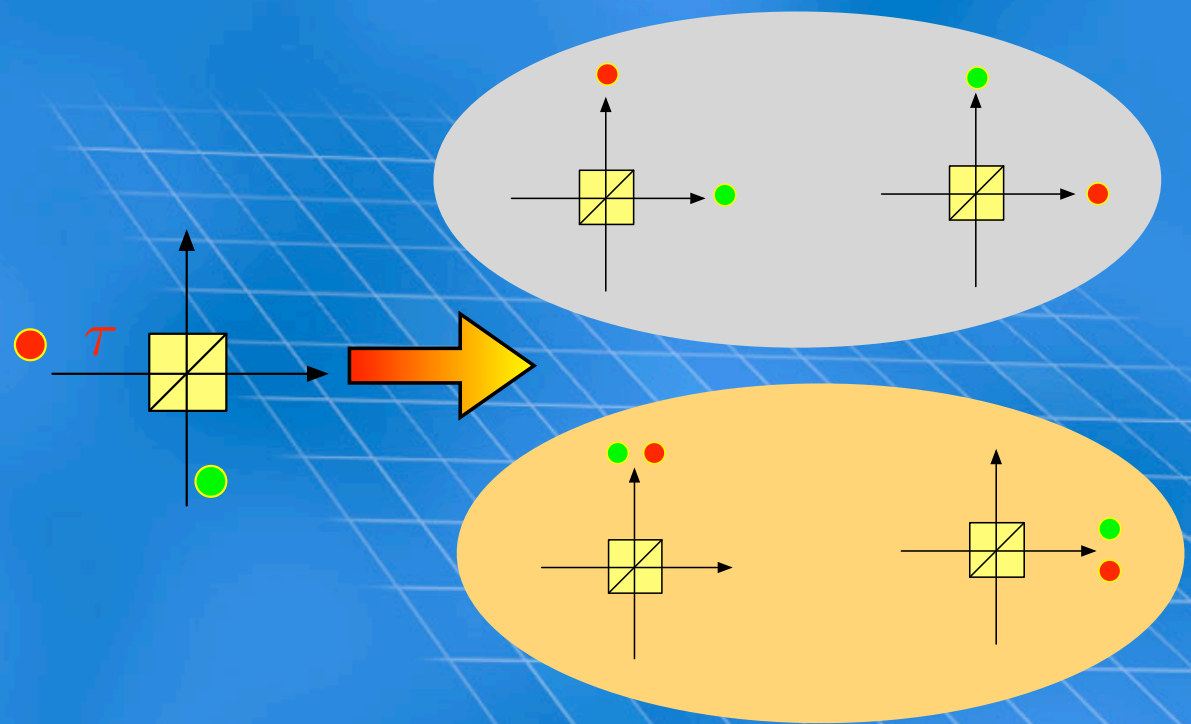

Cancels when photons arrive at the BS at the same time

$$|\psi\rangle = \frac{1}{\sqrt{2}}(|2\rangle|0\rangle + |0\rangle|2\rangle)$$

$\tau = 0$	0 or 2 photons at the detector
$\tau \neq 0$	0, 1, or 2 photons at the detector

Single-detector count rate

0, 1, or 2 photons

Detector cannot resolve incident photon numbers.

Single-photon Detection efficiency: η

Two-photon Detection efficiency: $\eta + (1-\eta)\eta = 2\eta - \eta^2$

Overall Count Rate: $R \propto P_1\eta + P_2(2\eta - \eta^2)$

(P_1 and P_2 are the probabilities that one and two photons, respectively, are incident on the detector)

Photon Number Resolving detector	**Detection rate is constant regardless of delay**
Commercial APD	**Detection rate is lower when** $\tau = 0$

(First reported by Resch, Lundeen, and Steinberg [PRA 63, 020102])

Motivation

- Confirm Resch *et al*'s result (Raw data of Resch *et al* did not show the dip effect clearly due to first-order interference).
- Commercial single-photon detectors (based on avalanche photo detection process) are NOT capable of resolving photon numbers:
  - How do they respond to different photon number states?
  - Can this deficiency be somehow utilized for state discremination?
  - Design a quantum interferometer which can generate certain two-photon number states deterministically.

Experiment I

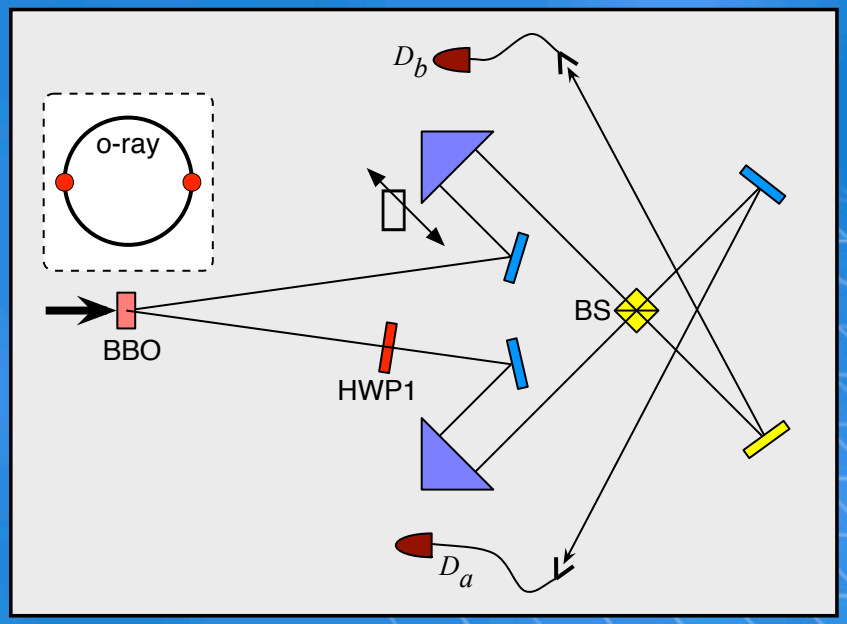

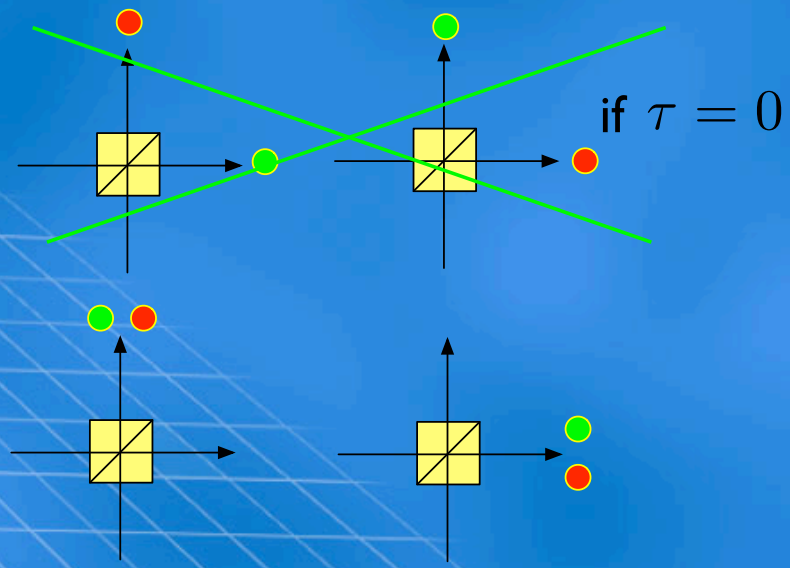

$$|\psi\rangle = \frac{1}{\sqrt{2}}(|2\rangle|0\rangle + |0\rangle|2\rangle)$$

$\tau > \tau_c$	$\tau = 0$
$P_{b0} = 1/4$	$P_{b0} = 1/2$
$P_{b1} = 1/2$	$P_{b1} = 0$
$P_{b2} = 1/4$	$P_{b2} = 1/2$

$$R \propto P_1\eta + P_2(2\eta - \eta^2)$$

$$R(\tau > \tau_c) \propto \eta - \frac{1}{4}\eta^2$$

$$R(\tau = 0) \propto \eta - \frac{1}{2}\eta^2$$

Effects of detection bandwidth:

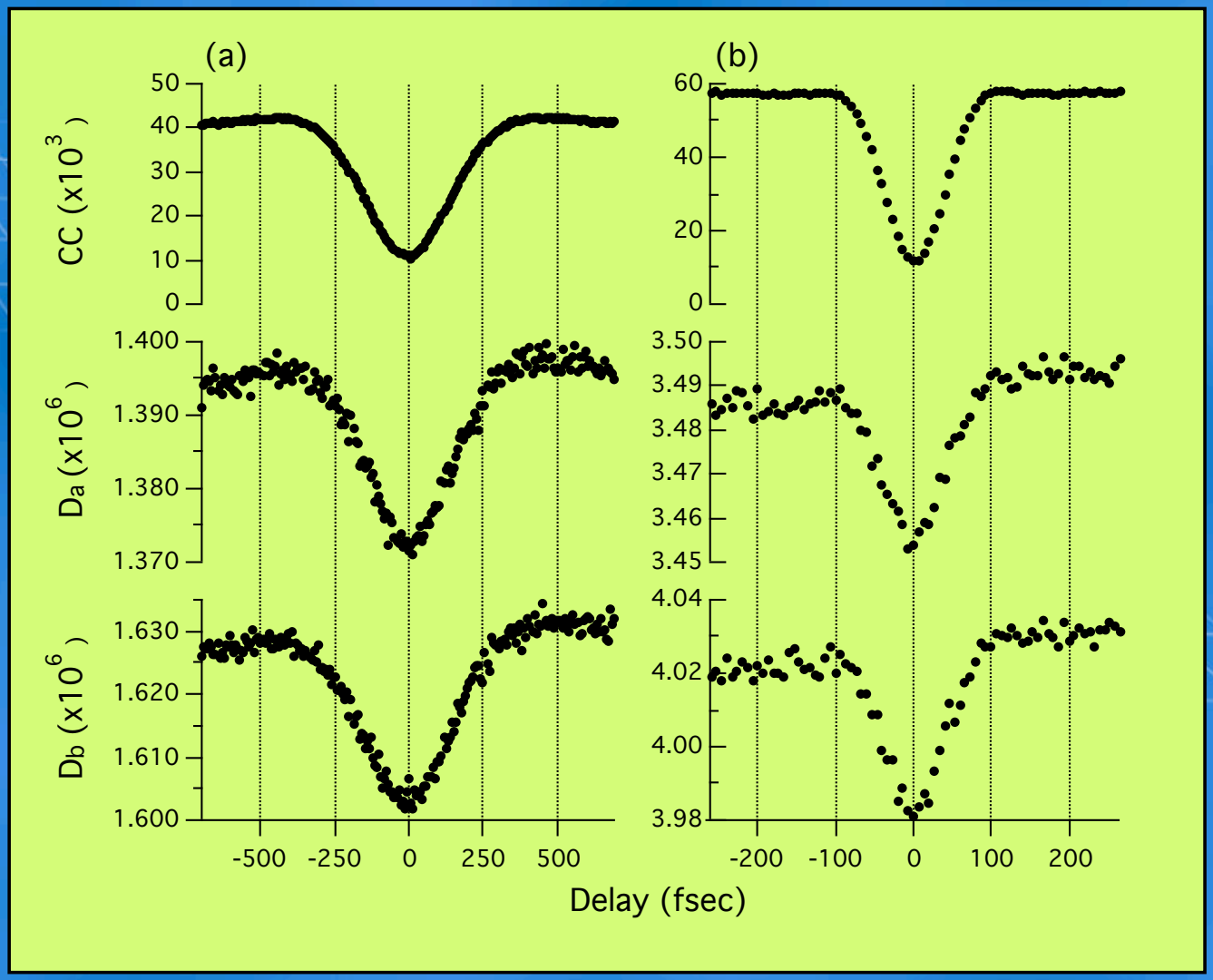

Effects of 2nd order visibility:

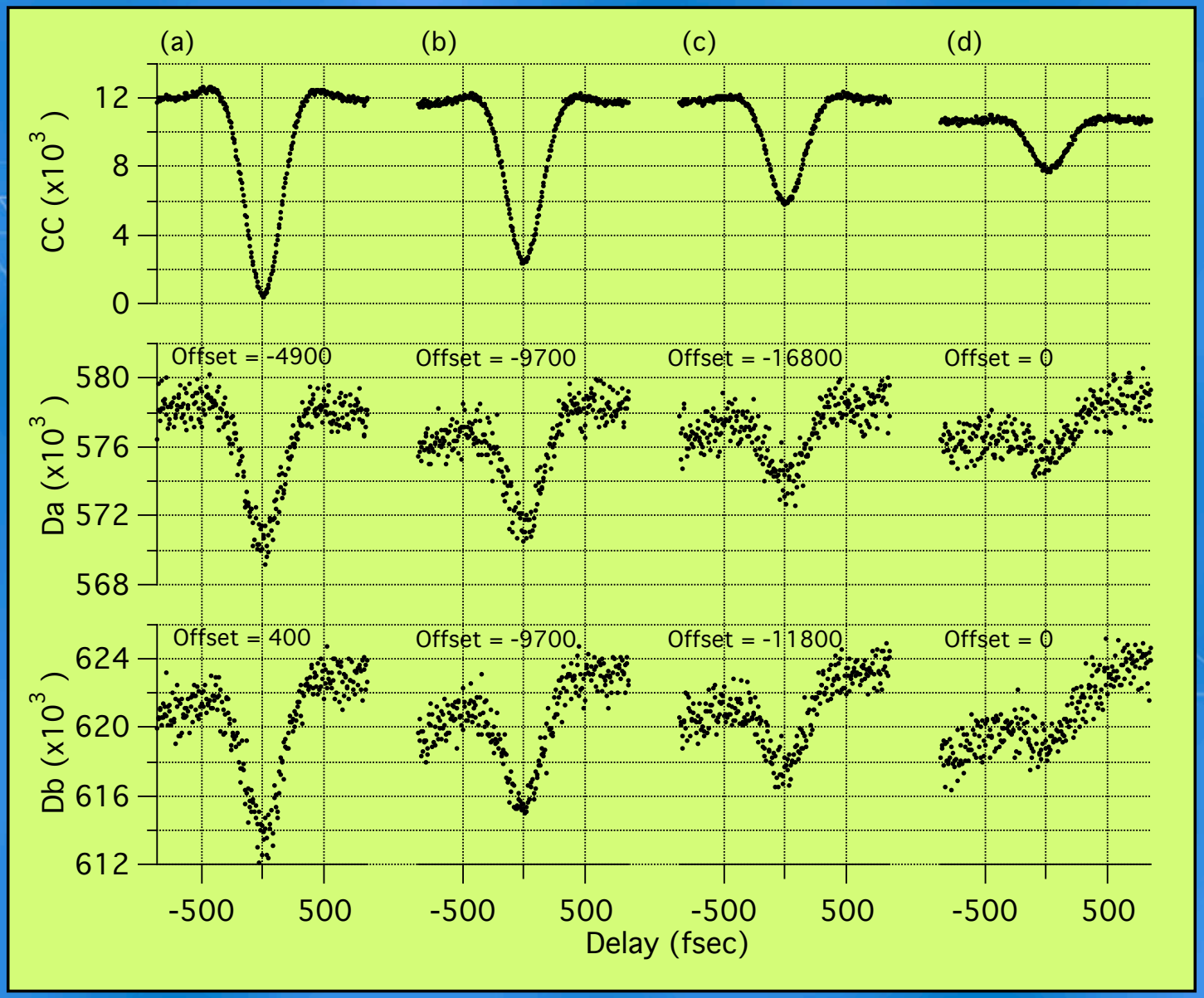

Experiment II

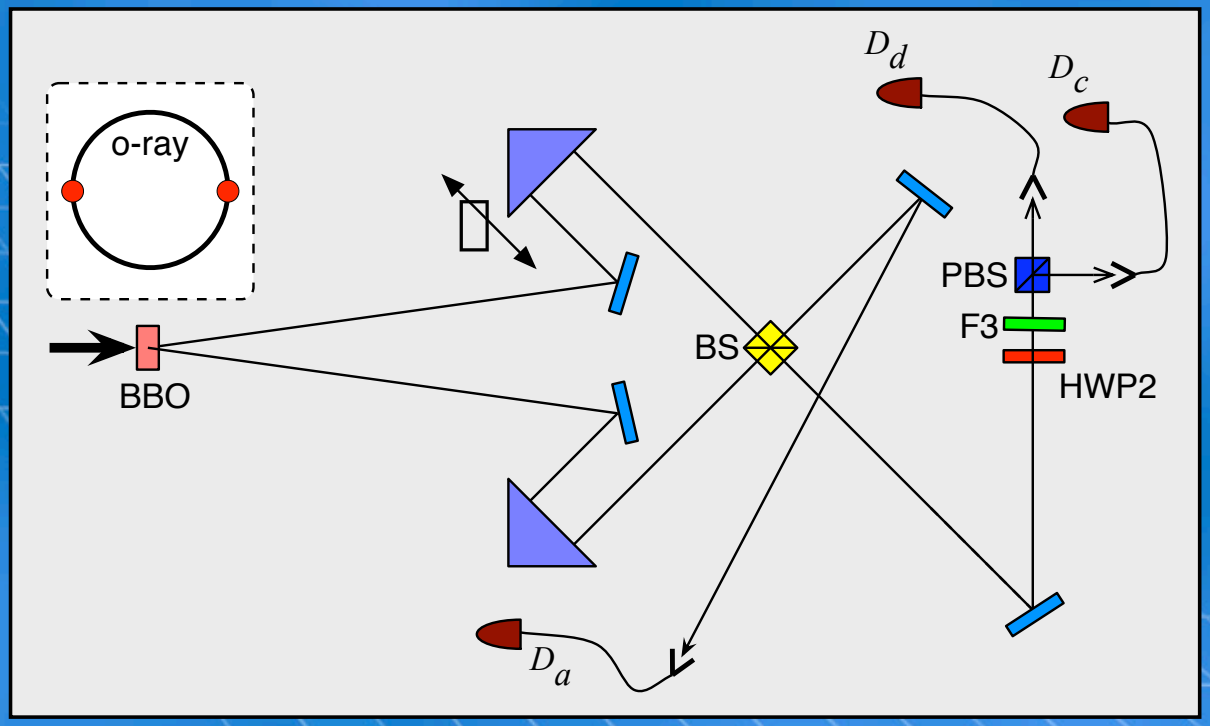

When $\tau = 0$, the coincidence should show a peak:

* Does this mean $|1\rangle_c|1\rangle_c$?
* If so, single count rates should show peaks!

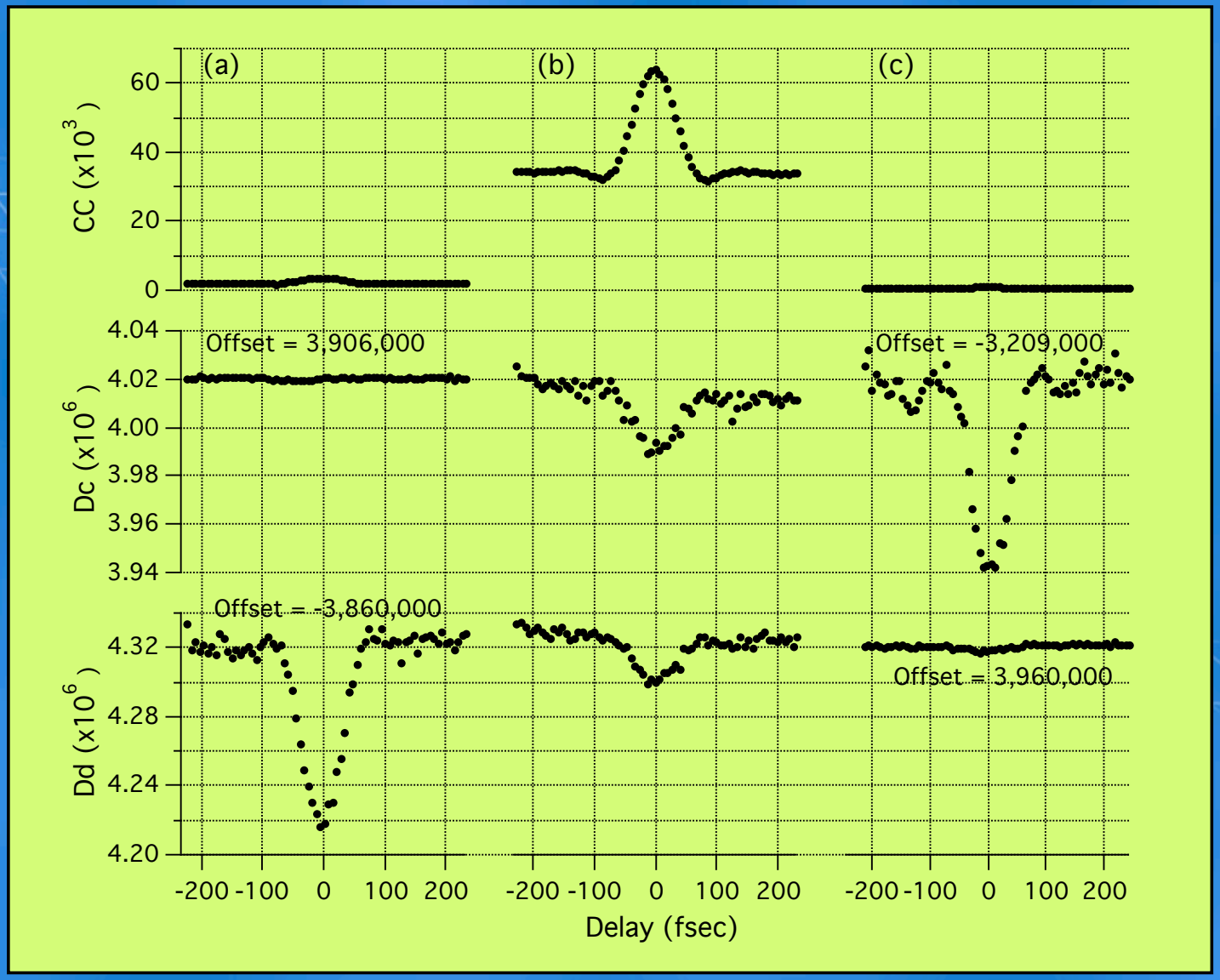
(a)
(b)
(c)
CC (x10^3)
60
40
20
0
Dc (x10^6)
4.04
4.02
4.00
3.98
3.96
3.94
Offset = 3,906,000
Offset = -3,209,000
Dd (x10^6)
4.32
4.28
4.24
4.20
Offset = -3,860,000
Offset = 3,960,000
-200 -100 0 100 200
Delay (fsec)

Conditional probabilities at the second beamspliter should be considered!

$$P_0^c = P_{b0}P_{00} + P_{b1}P_{10} + P_{b2}P_{20}$$
$$P_1^c = P_{b0}P_{01} + P_{b1}P_{11} + P_{b2}P_{21}$$
$$P_2^c = P_{b0}P_{02} + P_{b1}P_{12} + P_{b2}P_{22}$$

$\tau > \tau_c$	$\tau = 0$
$P_{b0} = 1/4$	$P_{b0} = 1/2$
$P_{b1} = 1/2$	$P_{b1} = 0$
$P_{b2} = 1/4$	$P_{b2} = 1/2$

$$R \propto P_1\eta + P_2(2\eta - \eta^2)$$

$$R(\tau > \tau_c) \propto \frac{1}{2}\eta - \frac{1}{16}\eta^2$$

$$R(\tau = 0) \propto \frac{1}{2}\eta - \frac{1}{8}\eta^2$$

Conditional Probabilities		
$P_{00}=1$	$P_{10}=1/2$	$P_{20}=1/4$
$P_{01}=0$	$P_{11}=1/2$	$P_{21}=1/2$
$P_{02}=0$	$P_{12}=0$	$P_{22}=1/4$

Experiment III

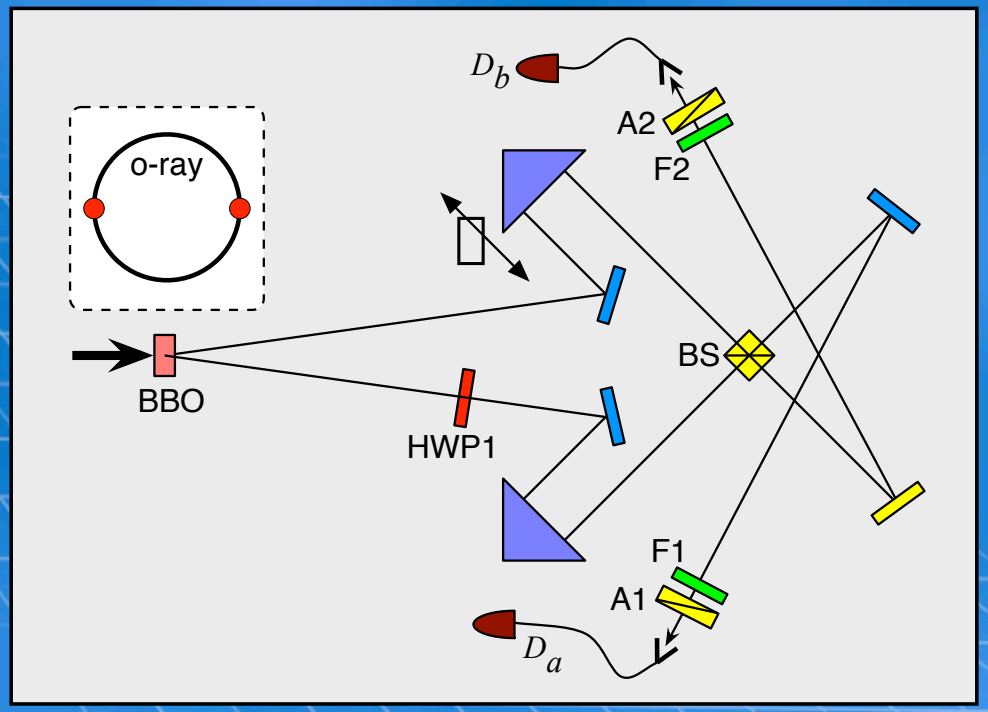

Shih-Alley type Polarization-entanglement scheme:

$$|\psi\rangle = \frac{1}{\sqrt{2}}(|H\rangle_a|V\rangle_b - |V\rangle_a|H\rangle_b)$$

Do single detector count rates show peak-dip features ?

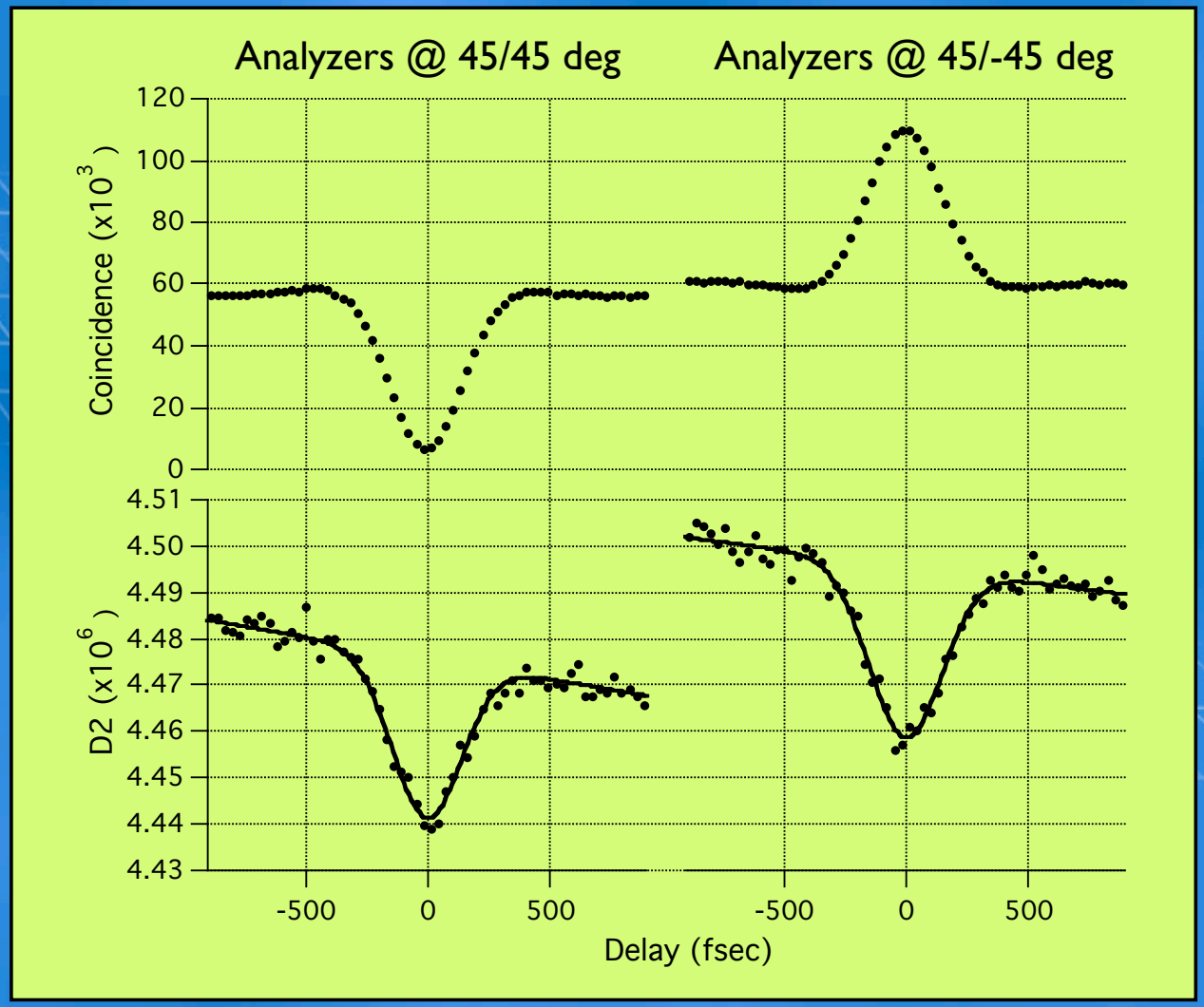
Analyzers @ 45/45 deg
Analyzers @ 45/-45 deg
Coincidence (x10^3)
120
100
80
60
40
20
0
D2 (x10^6)
4.51
4.50
4.49
4.48
4.47
4.46
4.45
4.44
4.43
-500
0
500
-500
0
500
Delay (fsec)

In single detector measurements, states previously discarded by coincidence post-selection do matter !

$\tau > \tau_c$

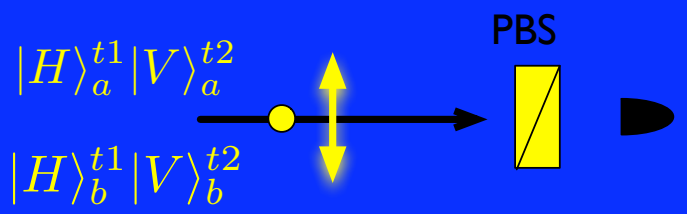

P20=1/4	P21=1/2	P22=1/4

$$R(\tau > \tau_c) \propto \frac{1}{2}\eta - \frac{1}{16}\eta^2$$

$\tau = 0$

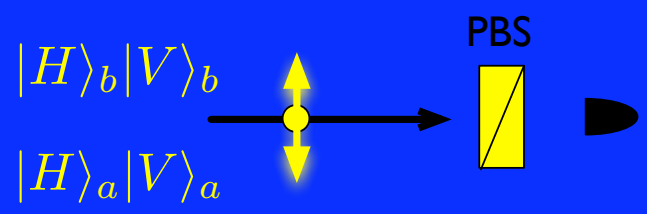

P20=1/2	P21=0	P22=1/2

$$R(\tau = 0) \propto \frac{1}{2}\eta - \frac{1}{8}\eta^2$$

* Single count rates of APD reveal the post-selective nature of Shih/Alley-type polarization entangled states.

* States $|1\rangle_c|1\rangle_d$ and $\frac{1}{\sqrt{2}}(|2\rangle_c|0\rangle_d + |0\rangle_c|2\rangle_d)$ exist only in the coincidence basis.

* Single-detector response to postselection-free two-photon number states $|1\rangle_c|1\rangle_d$ and $\frac{1}{\sqrt{2}}(|2\rangle_c|0\rangle_d + |0\rangle_c|2\rangle_d)$?

Consider,

$$|1\rangle_c|1\rangle_d$$

$$\frac{1}{\sqrt{2}}(|2\rangle_c|0\rangle_d + |0\rangle_c|2\rangle_d)$$

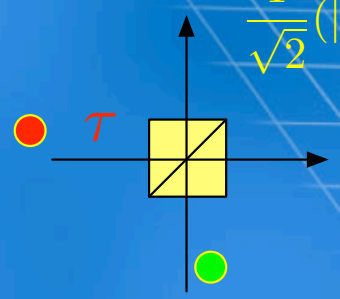

$\tau > \tau_c$	dip$(\tau = 0)$	peak$(\tau = 0)$
P0=1/4	P0=1/2	P0=0
P1=1/2	P1=0	P1=1
P2=1/4	P2=1/2	P2=0

Single-detecor count rates mirror the coincidence dip and peak!

$$R_{peak}(\tau = 0) \propto \eta$$

$$R(\tau > \tau_c) \propto \eta - \frac{1}{4}\eta^2$$

$$R_{dip}(\tau = 0) \propto \eta - \frac{1}{2}\eta^2$$

Experiment IV

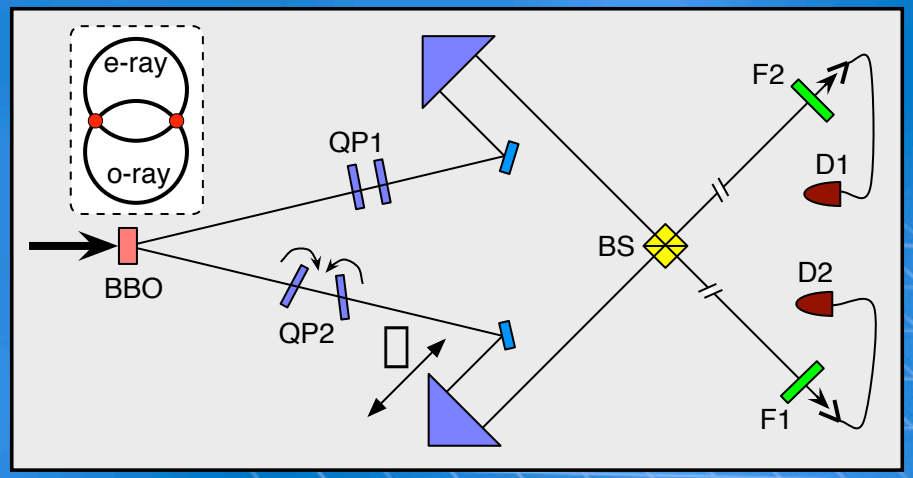

(Polarization analyzers are NOT used)

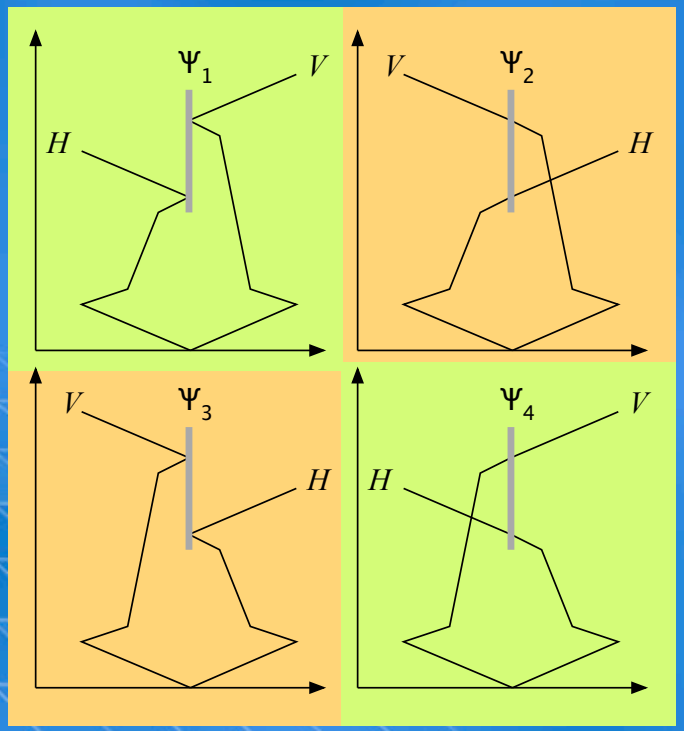

$$|\psi\rangle_{in} = \mathcal{F}(\omega_e, \omega_o)|V\rangle_1|H\rangle_2 + e^{i\varphi}\mathcal{F}(\omega_o, \omega_e)|H\rangle_1|V\rangle_2$$

* Final two-photon amplitudes are pair-wise indistinguishable!
* No state-postselection: Coincidence peak or dip corresponds to

$|1\rangle_c|1\rangle_d$ $\qquad$ $\frac{1}{\sqrt{2}}(|2\rangle_c|0\rangle_d + |0\rangle_c|2\rangle_d)$

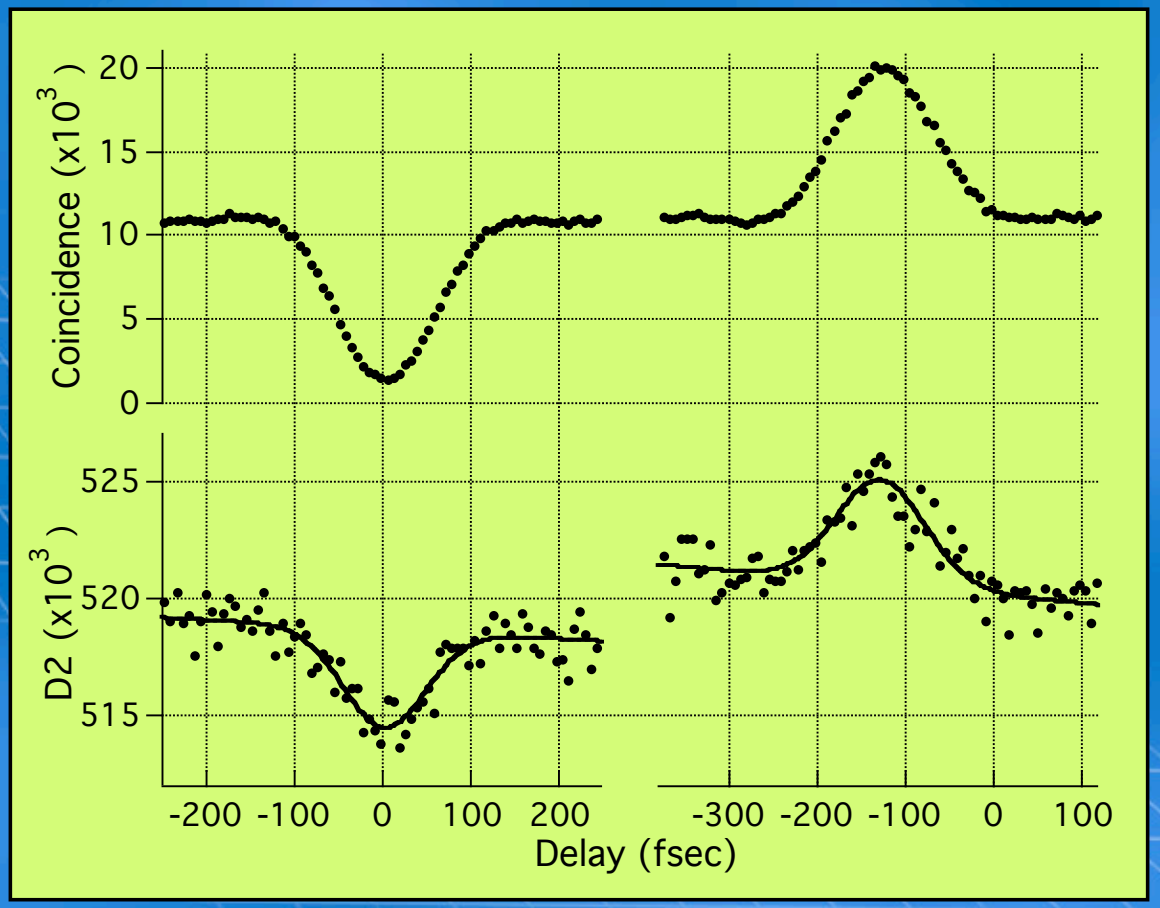

* Data measured with ultrafast pump, 3mm thick BBO, and broadband pump rejection filters.
* Single detector count rates mirror coincidence features.
* Data also re-confirms that asymmetry observed in some ultrafast type-II SPDC experiments are due to experimental artifacts.

Summary

- The observed "dip" in the single counting rate is the combined result of quantum interference and the detector's insensitivity to incident photon numbers.
- Photon counting APD's which cannot resolve photon numbers can be used to distinguish post-selctive states vs non-postselective states.
- Demonstrated a new quantum interferometer which can easily switch between two two-photon number states $|1\rangle_c|1\rangle_d$ and $\frac{1}{\sqrt{2}}(|2\rangle_c|0\rangle_d + |0\rangle_c|2\rangle_d)$.