Materials for Very-High-Temperature Reactor

Bill Corwin, Director
National Gen IV Materials Technology Program
Oak Ridge National Laboratory

Presented at
CEA, Saclay

Saclay, France
May 28, 2003

Advanced Materials Development and Qualification Essential for All Gen IV Reactors

- Materials Will Be Exposed to High Temperatures, Neutron Exposures, and Corrosive Environments
- 60-Year Operating Lives for Gen IV Reactors Will Require Very Long-Term Materials Stability

- Process-Heat Use for Large-Scale Hydrogen Generation Will Also Require Materials Compatibility with Heat-Transfer Media and Reactants
- Research Will Build upon Extensive Previous Materials Development for Other Reactor Systems

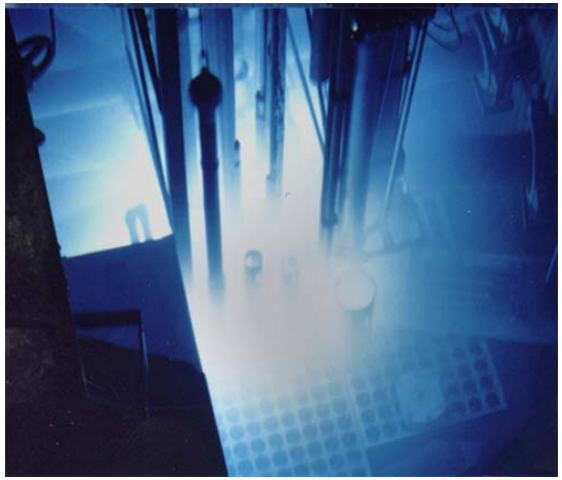

Preliminary Survey of Materials Needs for VHTR Demonstration Plant Performed

Assumed Characteristics

- He coolant
- 1000°C outlet temperature
- 600 M_{th}
- Prismatic graphite block core based
- SiC-coated TRISO fuel
- Direct cycle electrical production
- Process heat for hydrogen generation

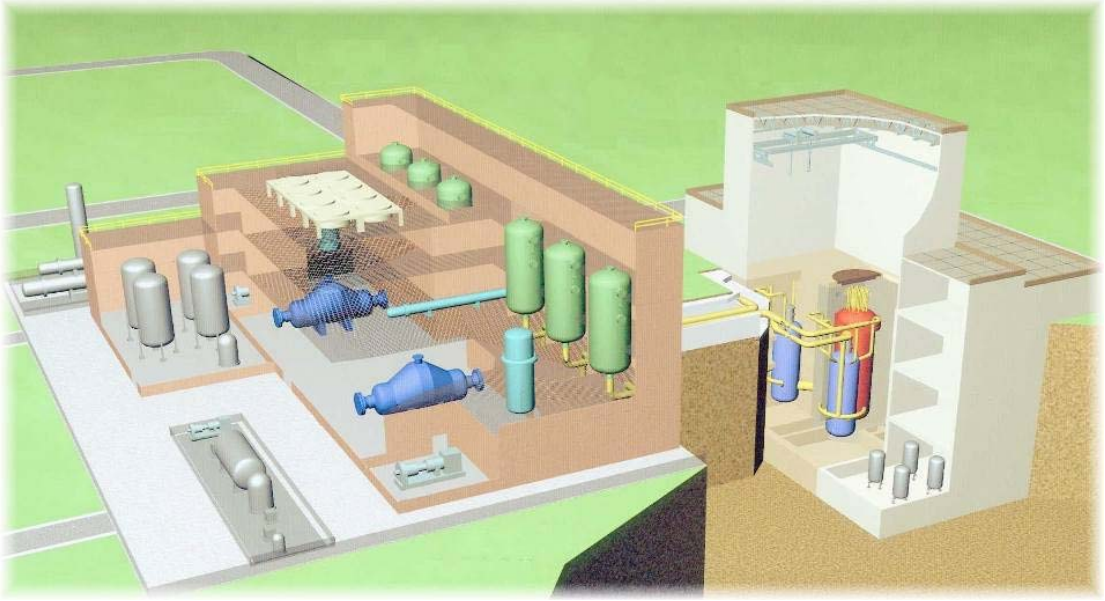

- **Boundary Conditions**
  - Deploy VHTR in 2015 - 2018
  - Very quick survey schedule required expert opinion
  - Materials for hydrogen generation plant not included

Similar survey planned for pebble bed version

Preliminary Materials Survey Used GT-MHR as Baseline

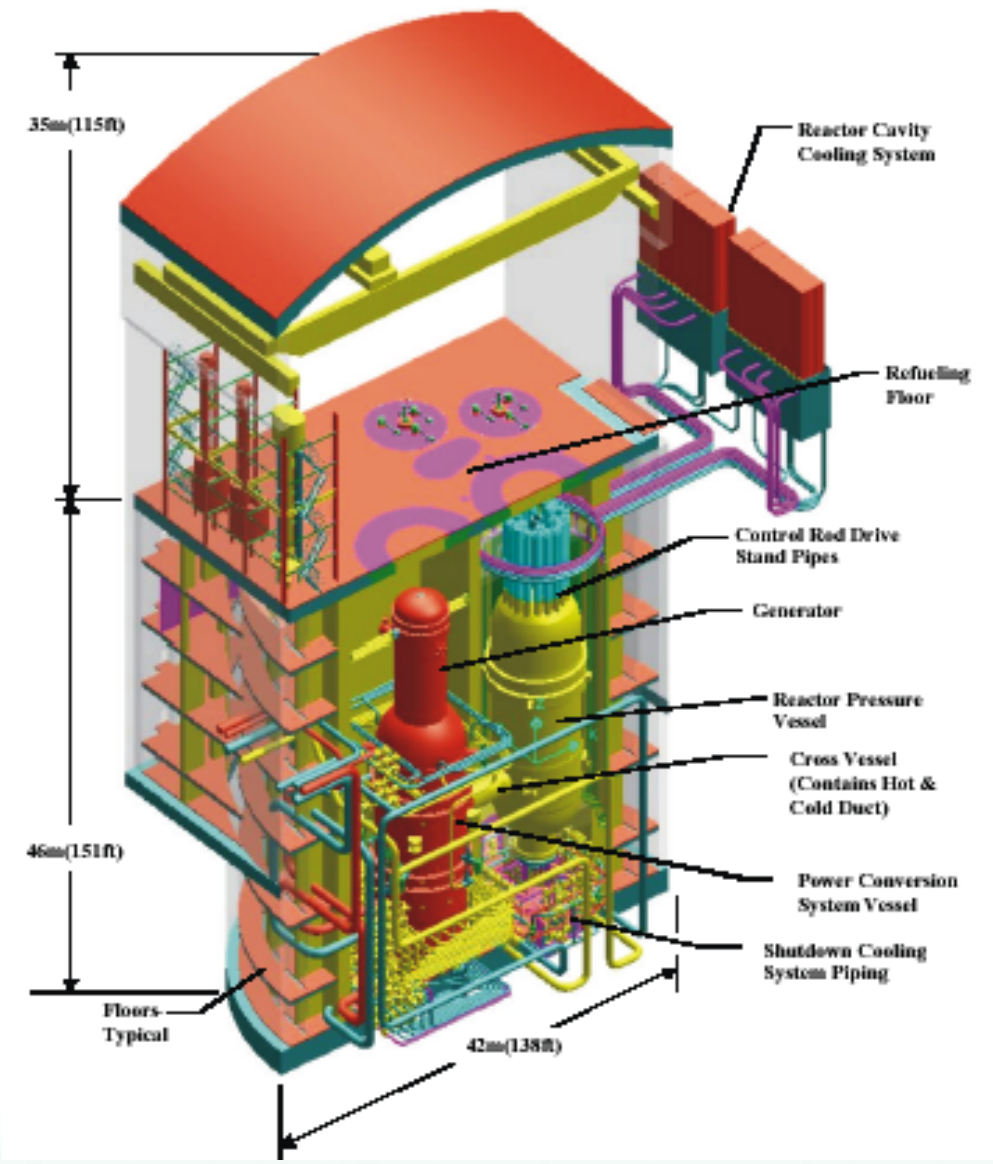

Cutaway Drawing Showing Reactor Vessel and Power Conversion Arrangement

Reactor Pressure Vessel System Can Likely Use Code-Approved Material

- 9Cr-1Mo steel most likely near-term candidate material
- Extensive industrial fabrication and high-temperature service experience
- Requires additional very long-term creep and creep-rupture data
- High-temperature design methodology needs updating for nuclear service

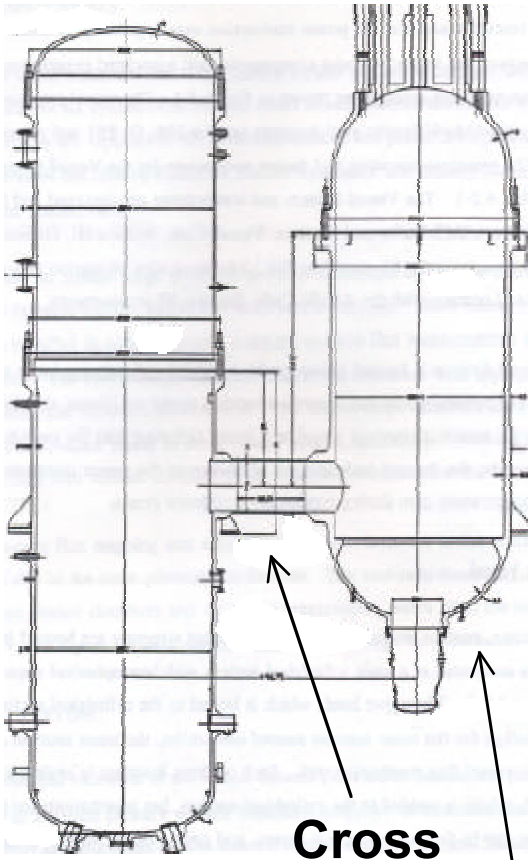

Very Large Vessel Sizes Will Require Scale-up of Fabrication Methods

- Forging and joining of very large rings
- Transportation
- On-site welding, PWHT, and NDE

- Nuclear service will also require:
  - Irradiation effects testing
  - Emissivity verification
  - Very high-temperature fatigue and crack-growth testing in helium

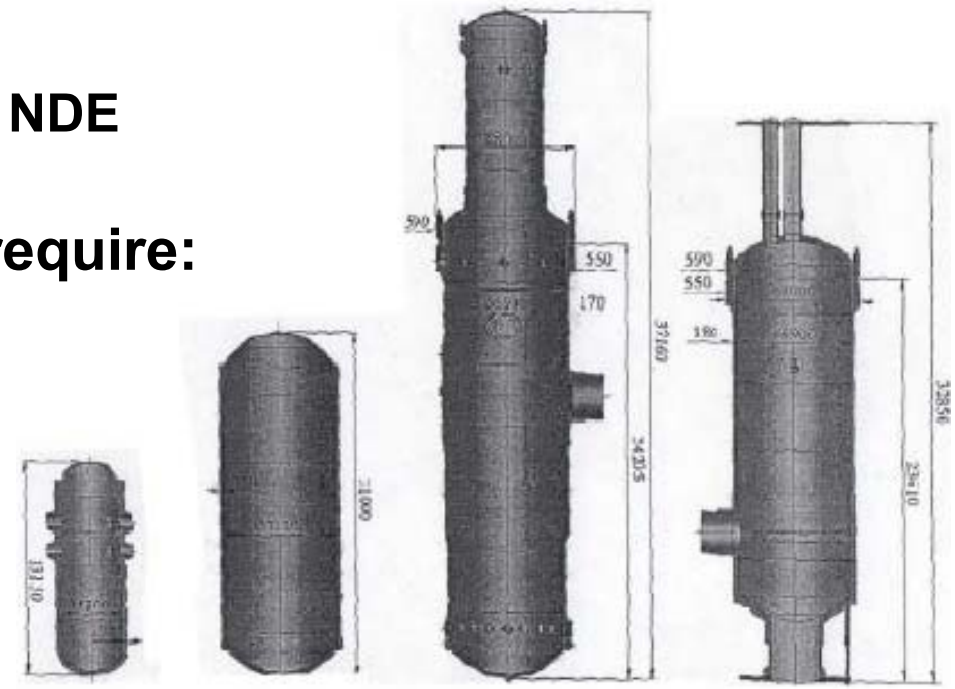

PWR ABWR GT-MHR

PCV & RPV

Previous Nuclear-Grade Graphites Are Unavailable

- Extensive properties and models developed for H-451 for FSV, but precursors no longer exist
- Data needs to be updated for modern, available grades
- Molded and extruded fine-grained, isotropic graphites available for core and support applications
  - Used in Japanese HTTR, Chinese HTR-10, and South African PBMR
  - Samples currently being irradiated could accelerate qualification

Graphite Fuel Element Blocks

Irradiation Data Needed to Validate and Benchmark Existing Behavior

- Graphite data needs include:
  - Physical, mechanical, and oxidation properties
  - Variability within and among billets
  - 200°C higher temperatures
- Qualification will build upon very large bases of data and experience
- Possible to incrementally adjust existing design models
- Must complete and approve ASME Sec III, Div 2, Subsection CE, Design Requirements for Core and Support Structures, issued for comment in 1990

Internal Reactor Metallic Components Will Be Significantly Challenged in VHTRs

- Alloy 800H sufficient for most GT-MHR needs, higher temperatures for VHTR will require higher temp matls
  - Advanced metallic alloys
    - Hastalloy X or Alloy 617
  - Carbon-Carbon Composites
- High-temperature metallics have extensive design data bases but cannot handle off-normal conditions, up to 1200°C
- C-C composites mature technology but need architectures tailored to each component

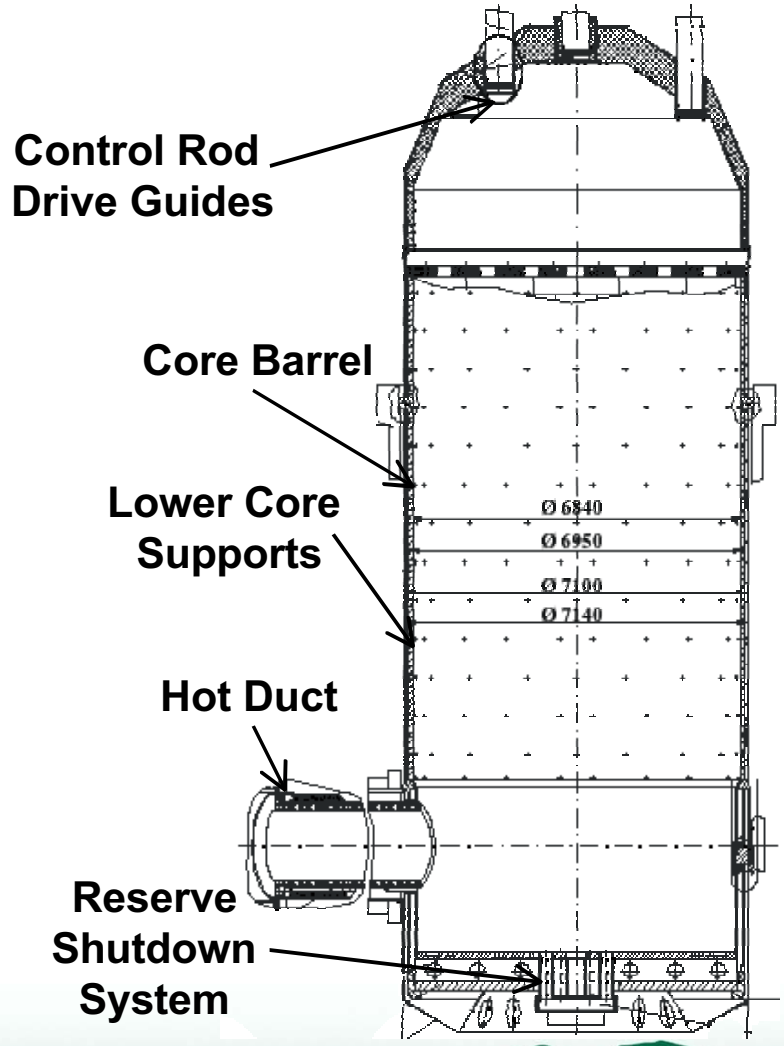

C-C Composites Needed for Higher Temperature Internals in VHTRS

- **Control rods, upper core restraints, interior insulation covers and supports**
- **Radiation effects data and design models must be developed for C-C composites**
  - **VHTR will need to extend to 200°C higher than current data**

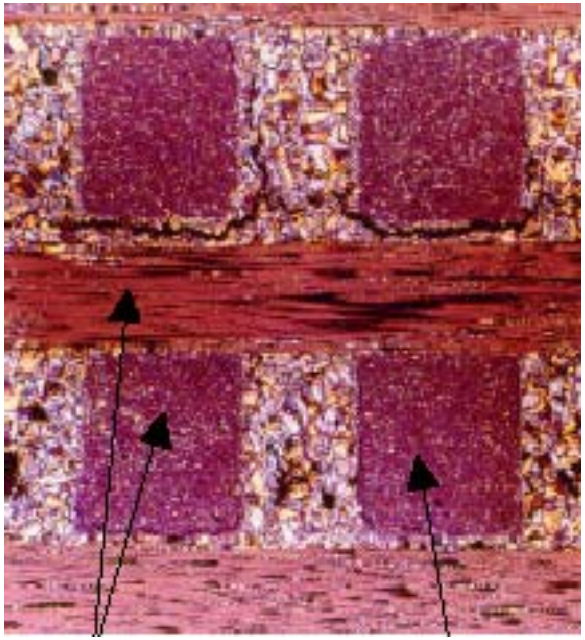

Fiber bundles

C-C composite microstructure

Very High-Temperature Insulation Will Be Required for Pressure Boundaries and Turbomachinary

- Fibrous Mats Supported by Cover Structures
- In contact with hottest gas in reactor system
- Kaowool with Alloy 800H containers adequate for lower temperature GCRs
- VHTRs will need new cover structure materials and characterization of ceramic insulation
  - Physical, mechanical, corrosion, and irradiation properties

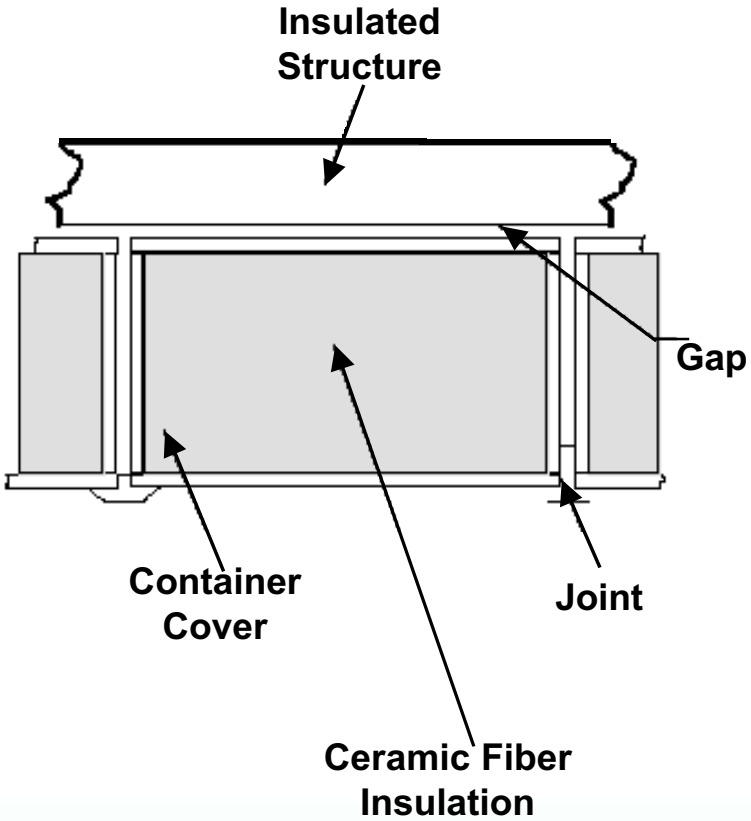

1000°C Input Temperatures in VHTRs Will Strongly Challenge IHX Materials

- Varied materials compatibility needs (e.g. He, N_2, molten salt, etc.)
- Containment within pressure vessel may minimize stress levels
  - Secondary gas circuit for PCU
  - Molten salts for gas generation may operate at much lower pressure
- Very high-temperature alloys required
  - Hastelloy X or Alloy 617
  - Mechanical and corrosion properties needed
  - Fabrication and joining technology critical

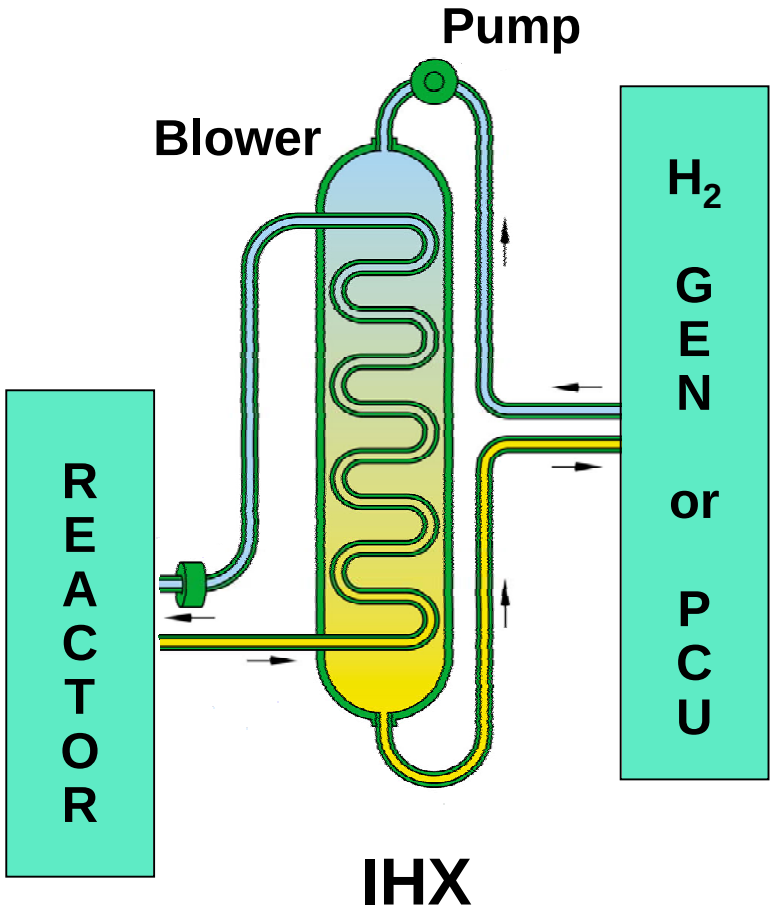

Heatric® Microchannel Printed-Circuit-Type Technology One Possible Approach for IHX

- Very compact and efficient industrial design with current ASME Section VIII approval
- Already demonstrated
  - to 900°C
  - large units
  - > 1000 psi
- Fabrication technology for very high-temperature alloys must be demonstrated
  - Diffusion bonding
- Assurance of primary circuit integrity requires validated NDE or pressure testing

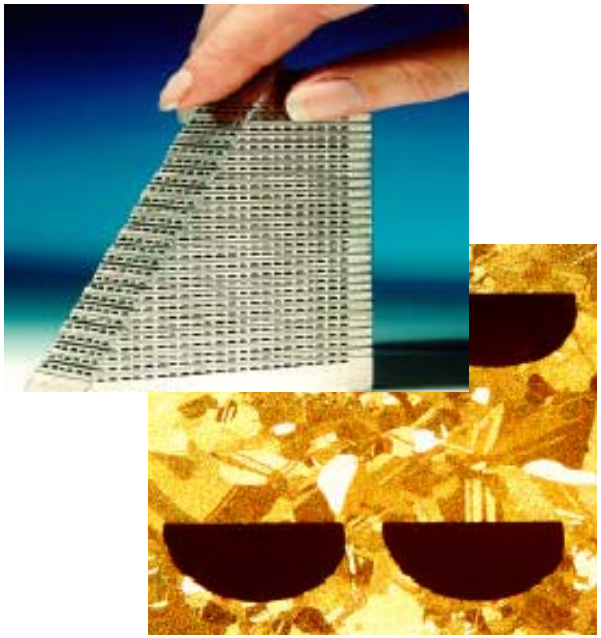

Structure of "Printed Circuit" Heat Exchanger

Alternate Designs Must Be Evaluated

Materials for Power Conversion Systems Less Challenged than Fossil Plants

- Inlet turbine shroud, turbine disk and blades, and recuperator most critical components
- Nickel-based alloys (617) or C-C composites can be used for inlet shroud
  - Properties at 950-1000°C needed
- Existing turbine blade and disk materials may work for VHTR but will require property verification or coating development
- Stainless steels likely okay for VTHR recuperator for but scale-up of thin-sheet fabrication technology required

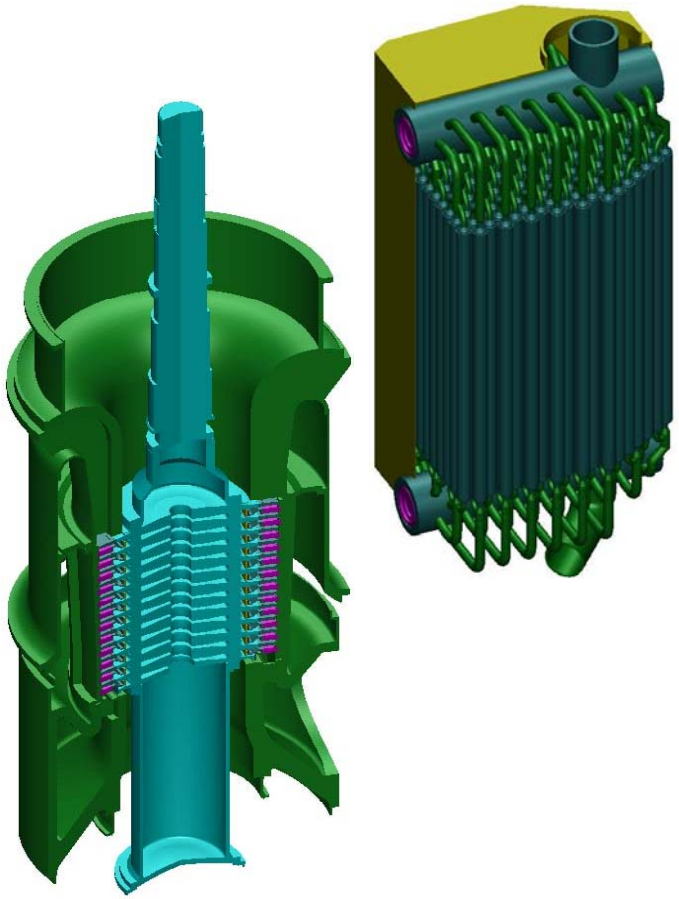

VHTR Materials Needs Addressed by Both Crosscutting and Reactor-Specific Gen IV Tasks

- **Crosscutting Materials Tasks**
  - Materials for radiation service
  - Materials for high-temperature service
  - Microstructural analysis and modeling
  - High-temperature design methodology
- **Reactor-Specific Materials Tasks**
  - Graphite
  - Materials compatibility
    - Reactor coolants
    - Hydrogen production

Collaboration with Related Domestic and Foreign Programs Is Essential

Gen IV Materials Needs Are Currently Being Evaluated and Plans Developed

- Initial Focus Will Be on Commercial or Near-Commercial Materials for VHTR Applications
- Longer Term Focus Will Be on More Advanced Materials for Other Reactor Needs
- Initial Study of Materials Needs for Prismatic VHTR Completed
- Similar Studies for Pebble-Bed VHTR, GFR, SCWR, and LFR Beginning
- Results Will Form Basis for Detailed Program Plan to Be Completed by Late Summer '03
- Experimental Work to Begin This Year, Based on Overall Program Priorities