Retrievable Depleted Uranium Dioxide–Steel Cermet Spent-Nuclear-Fuel Multipurpose Casks

Dr. Charles W. Forsberg

Oak Ridge National Laboratory*
P.O. Box 2008, Oak Ridge, TN 37831-6179
United States of America
Tel: (865) 574-6783; E-mail: forsbergcw@ornl.gov

Session: Spent Fuel and High-Level Waste Transport II
Room: Dallas H; Time 1:00 pm
2003 International High-Level Radioactive Waste Management Conference
American Nuclear Society
Las Vegas, Nevada
Wednesday April 2, 2003

*Managed by UT-Battelle, LLC, for the U.S. Department of Energy under contract DE-AC05-00OR22725. The submitted manuscript has been authored by a contractor of the U.S. Government under contract DE-AC05-00OR22725. Accordingly, the U.S. Government retains a nonexclusive, royalty-free license to publish or reproduce the published form of this contribution, or allow others to do so, for U.S. Government purposes.

File name: Retrievable.HLW.Conf.2003.

Goals

- Integrated spent nuclear fuel (SNF) system
  - Reduced SNF and cask handling
  - Better safeguards and security
- Disposal of all long-lived radionuclides from the once-through fuel cycle
- Maintain future options [SNF and depleted uranium (DU) retrievability]
- Better Economics

Cermet Multipurpose Casks May Allow SNF Loading at the Reactor and Disposal at the Repository

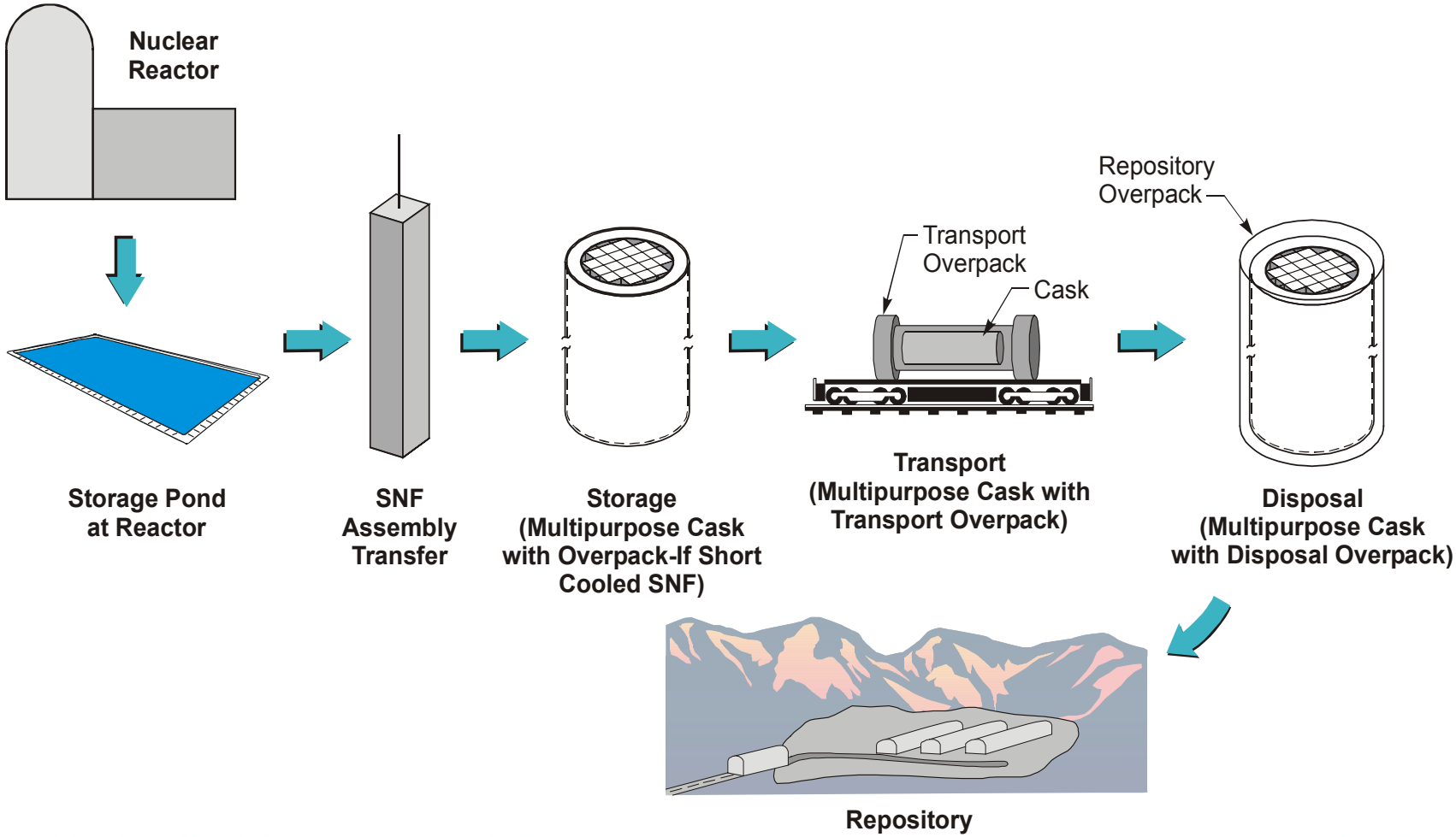

Depleted Uranium Dioxide (DUO_2)–Steel Cermet Casks

An Enabling Technology

Multipurpose Casks Can Be Constructed of a DUO_2-Steel Cermet

Cermet

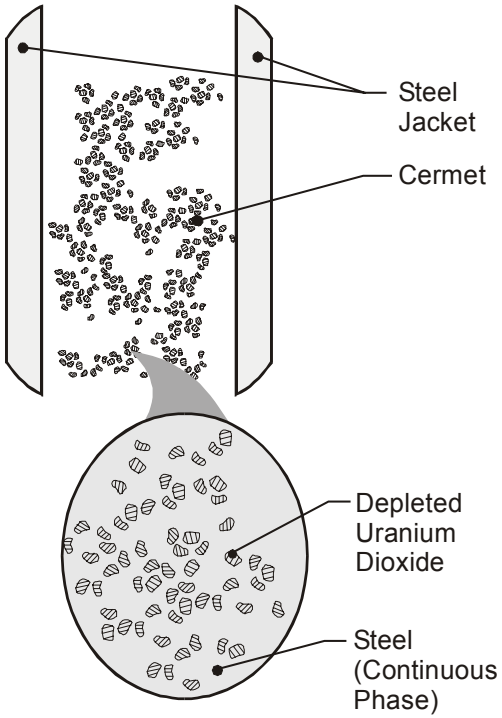

Applications

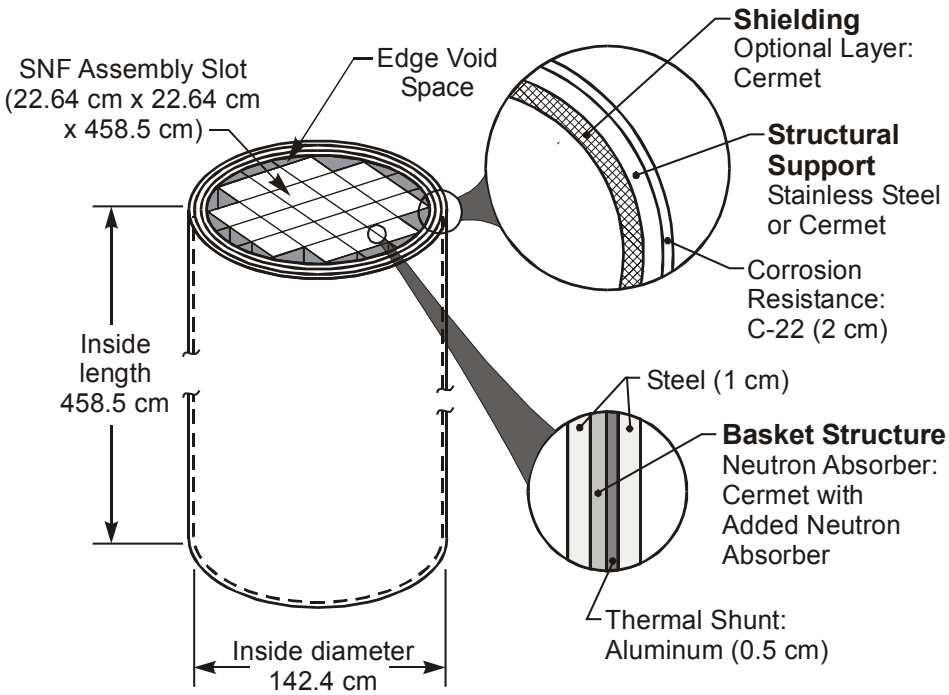

The Composition Across the Cermet Can Be Varied To Exceed Steel Cask Performance

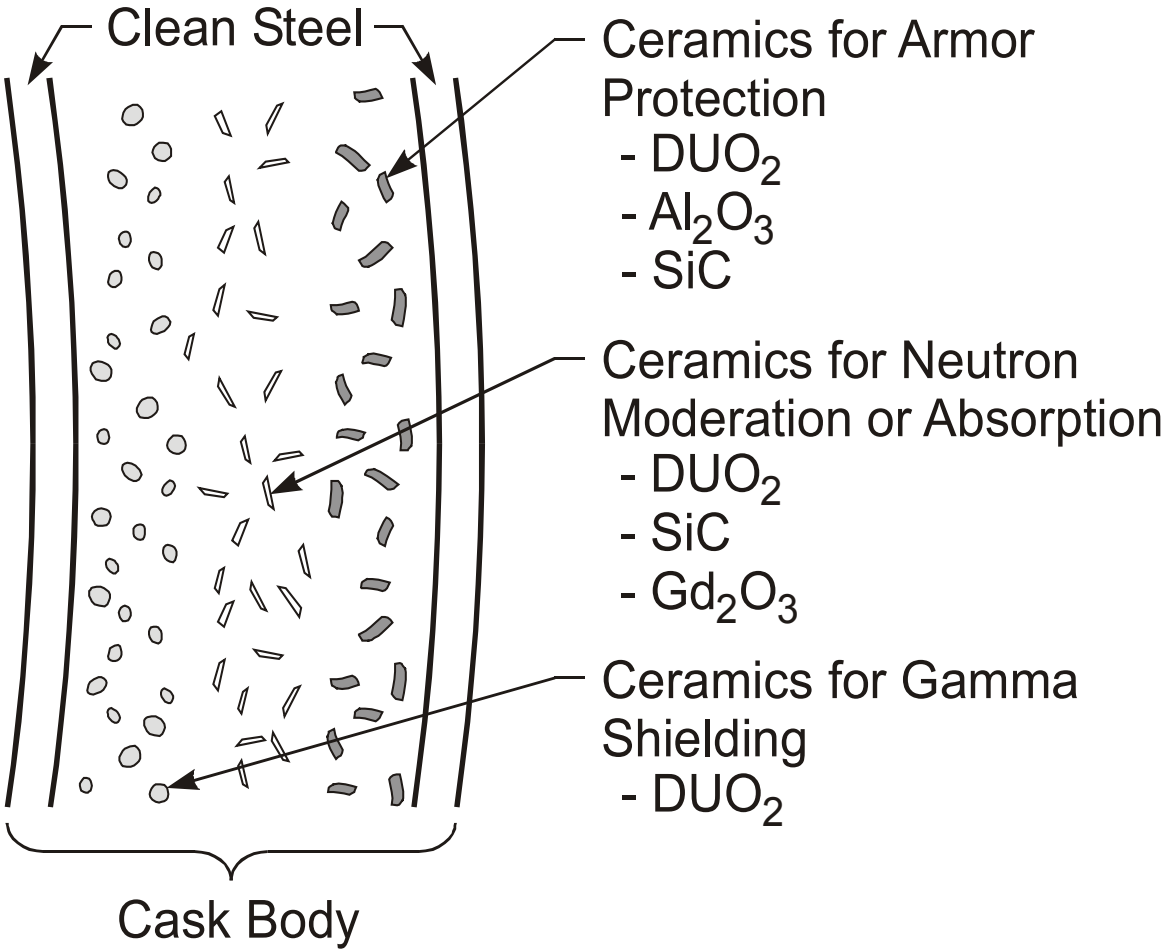

DUO_2 Cermets Are Superior Shielding Materials; This Implies Higher-Capacity Casks For the Same Weight Limits

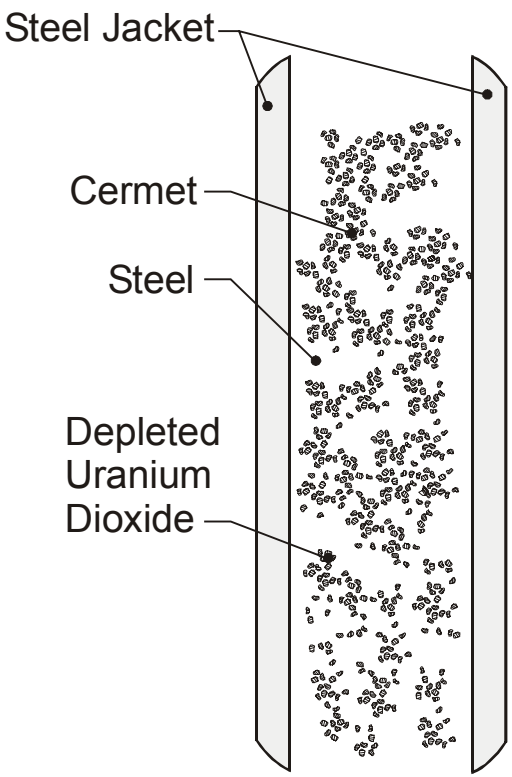

- Gamma Shielding Better Than Steel
  - Steel: 7.86 g/cm^3
  - DUO_2: 10.9 g/cm^3
- Neutron Shielding
  - High-density oxygen (DUO_2) moderator
  - Other neutron absorbers can be added
- Good Physical Properties
  - High thermal conductivity
  - No organics (no fire; acceptable to repository)

Waste Management Benefits

Multipurpose Cask Benefits

DUO_2-Steel Cermet Benefits

Multipurpose Casks Reduce Repository Surface Operations and Costs By Controlling Waste Package Heat Load By Decay, Not SNF Sorting

Current System

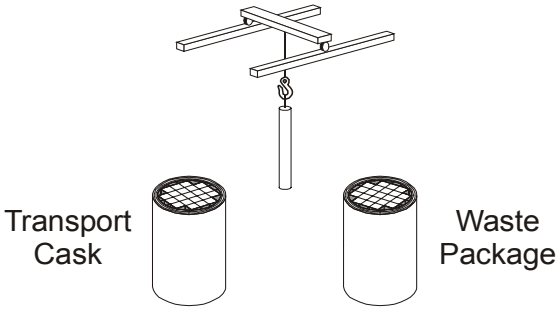

Remote Transfer of SNF

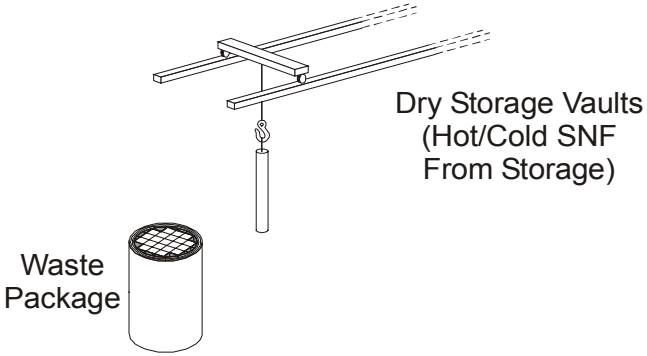

Adjusting Waste Package Heat Load for the Repository

Multipurpose Cask System

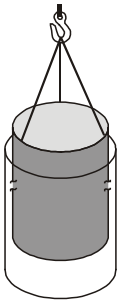

Addition of Overpack

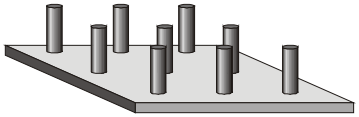

Surface Storage Until Repository Acceptable Heat Load

Multipurpose Shielded Cask Systems Simplify Retrieval of SNF From a Repository

(No Remote-Handling Operations; Disposal Package Used For Storage of Retrieved SNF)

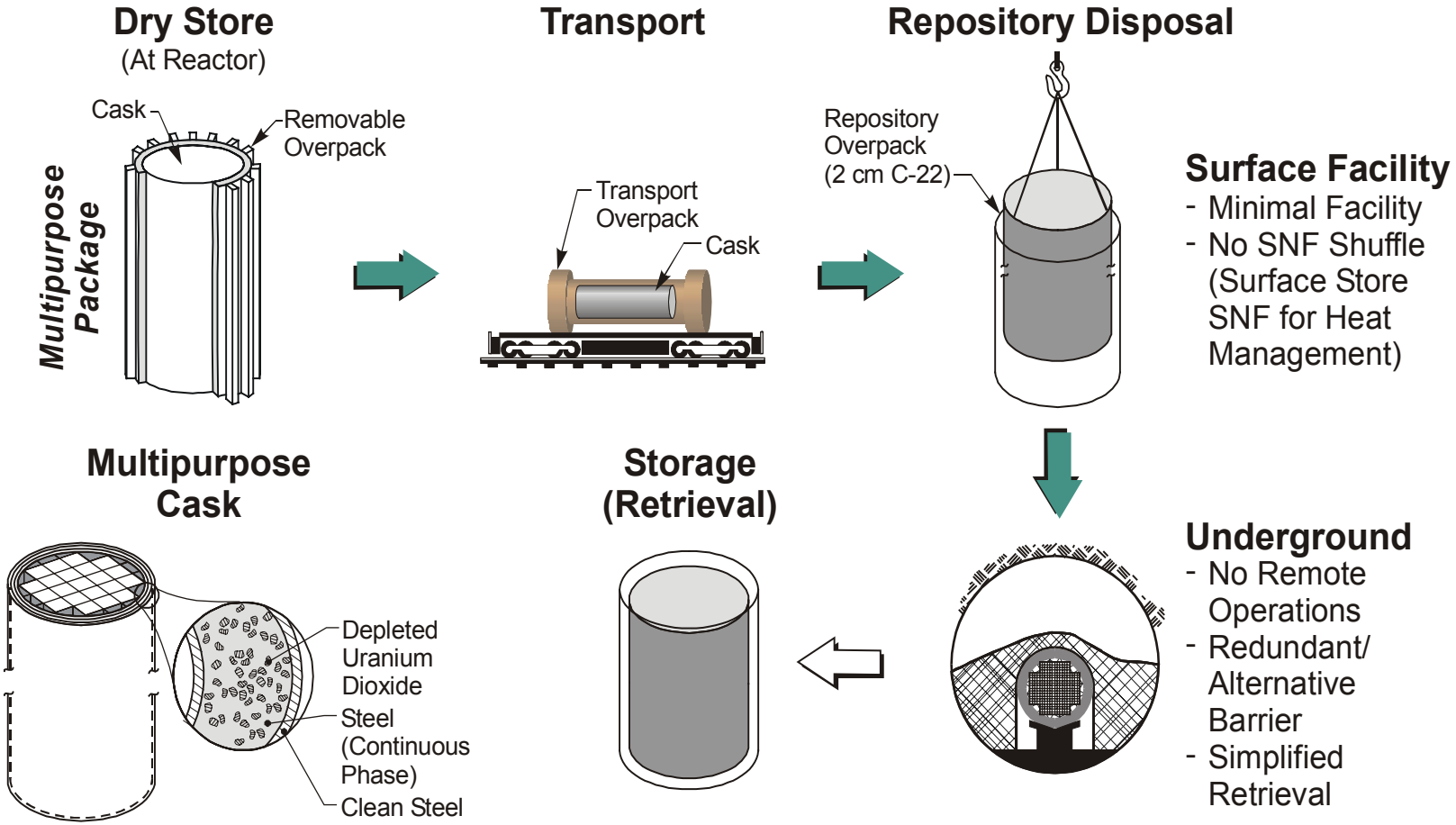

Some Uranium Ore Deposits Have Remained Intact for Millions of Years: the Same Mechanisms Should Delay SNF Degradation in Failed WPs Containing DUO_2

(DUO_2 Is The Only Sacrificial Compound to Preserve SNF UO_2 Under All Conditions)

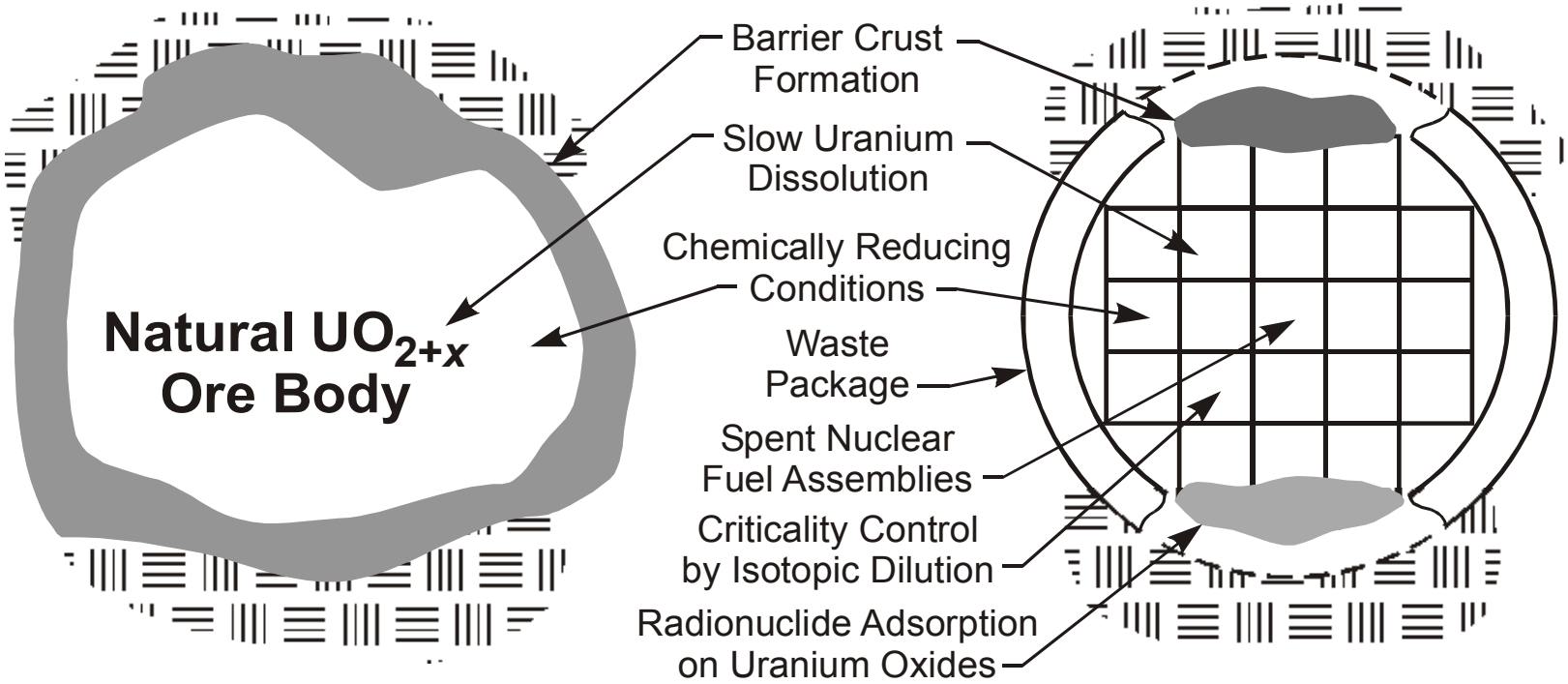

Cermet SNF Casks Co-Dispose of Two Wastes Simultaneously At One Site Vs Two Sites

–Depleted Uranium and Spent Nuclear Fuel–

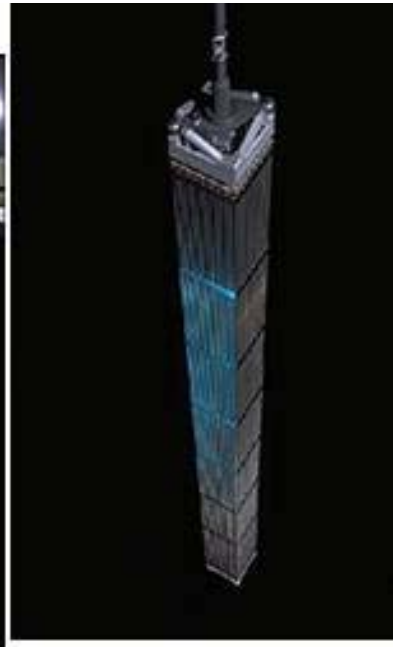

Cermet SNF Casks Enable Co-Recovery Of Depleted Uranium and Spent Nuclear Fuel—If Needed for Future Reactors

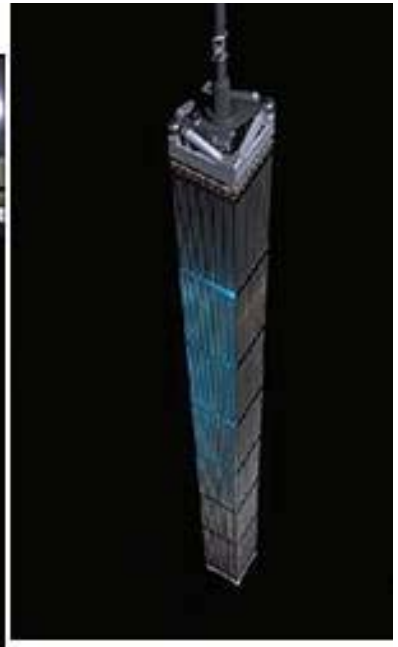

Cask Handling at the Repository

How to move a 100 ton cask

Swedish Cask Loading of Transport Ship Sigyn

(Courtesy of Swedish Nuclear Fuel & Waste Management Company, Photo by Bengt O. Nordin)

Swedish Heavy Cask (>100 ton) Land Transport

Courtesy of Swedish Nuclear Fuel & Waste Management Company, Photo by Bengt O. Nordin)

Repository Multipurpose Cask Transport System

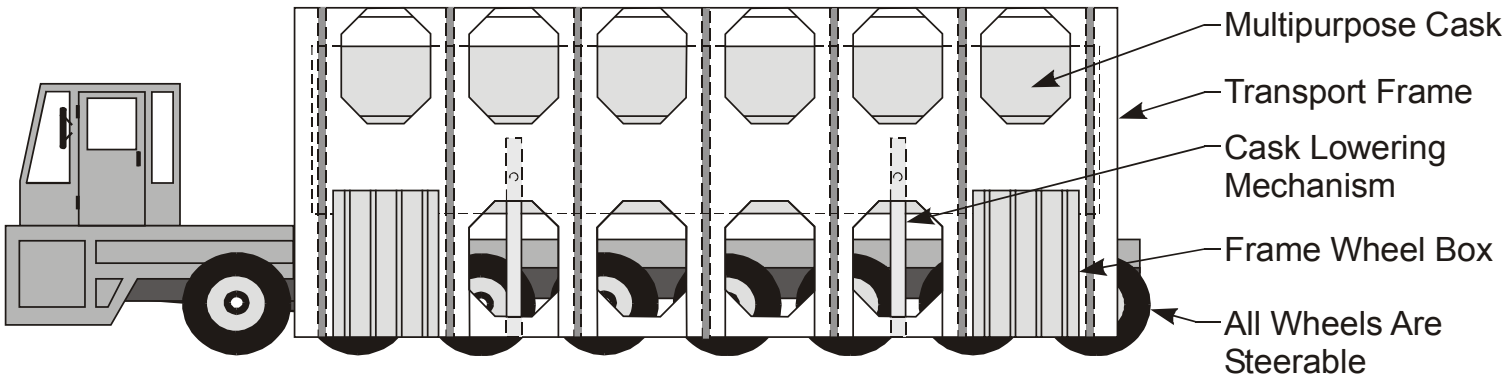

Side View

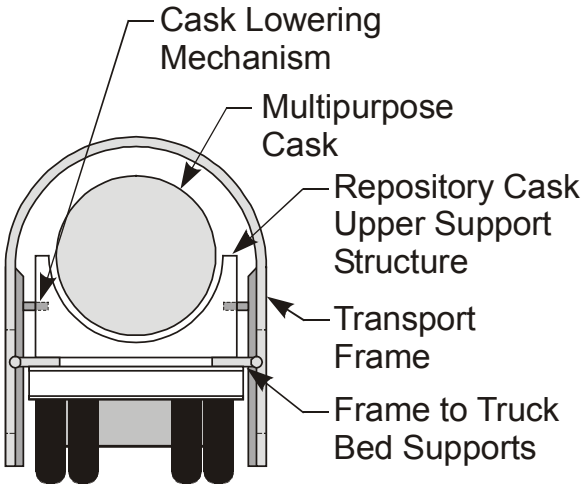

End View

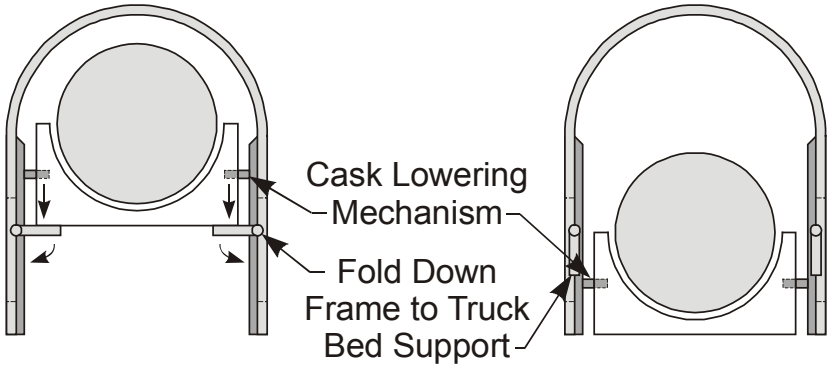

Unloading Cask in Repository

Issues

Institutional, Technical, and Economic

There Are Significant Issues

- **Institutional**
  - A viable system requires agreement between utilities, the repository, and owners of DU
  - Distribution of savings and costs between parties may be different than in the existing system
- **Technical**
  - Full evaluation of the system is required (including repository performance)
- **Economics**
  - Major savings require system integration
  - Economics is partly dependent upon cask manufacturing costs (See cermet manufacturing paper in conference proceedings; poster session)

Conclusions

- Multipurpose casks minimize SNF handling and cask operations
  - Improved security and safeguards
  - Potential reductions in total system costs
- Potential benefits of Cermet Multipurpose SNF Cask System
  - High performance
    - Higher capacity casks
    - Improved performance against assault
    - Potential improvement in repository performance
  - Co-disposal of DU and SNF
  - Maintain energy options: co-recovery of DU and SNF
- Significant institutional and technical issues must be resolved

Backup Slides

Overpacks Address Multipurpose Cask Conflicting Storage, Transport, and Disposal Requirements

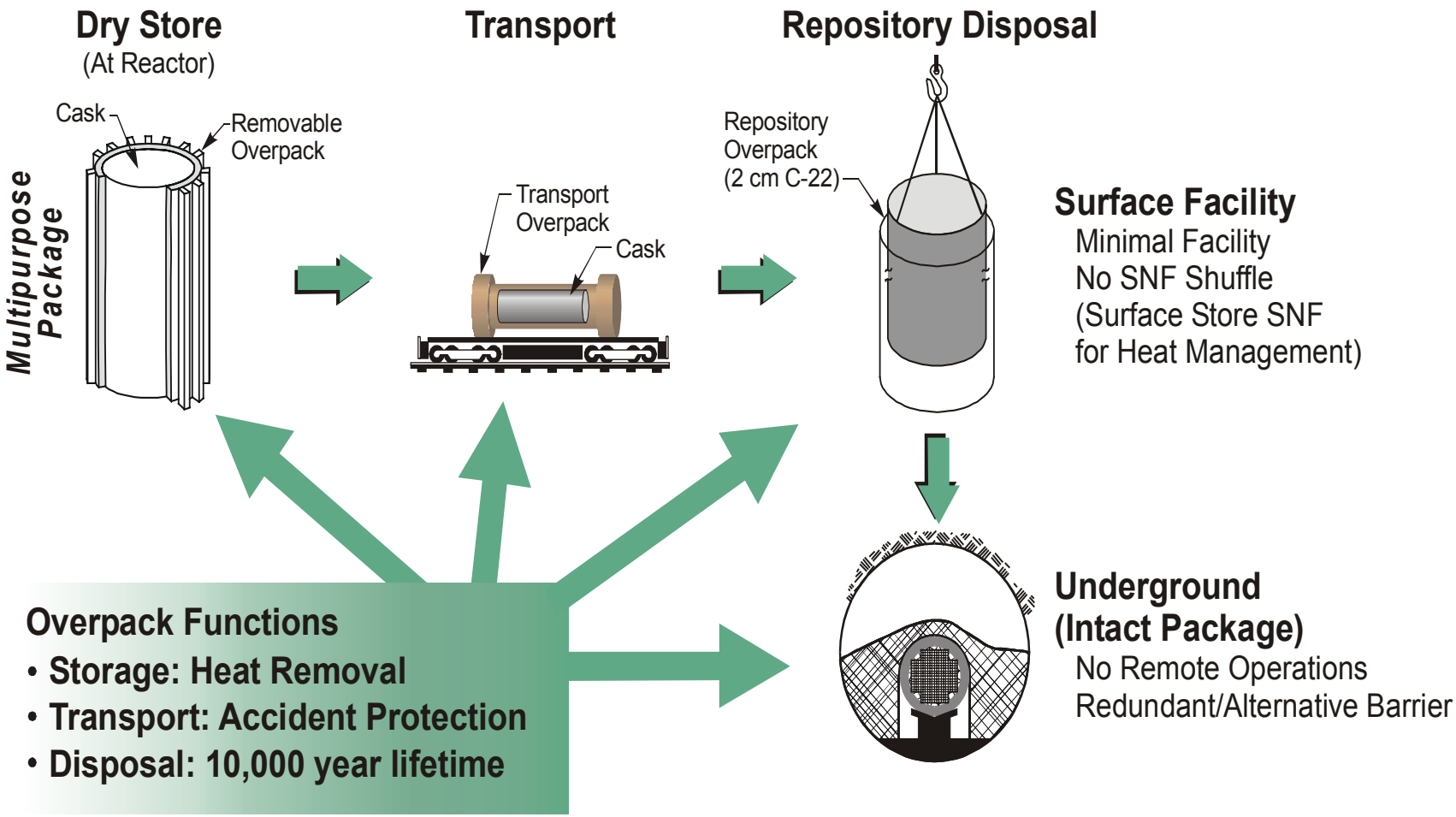

DUO_2 Cermets Are Superior Shielding Materials; This Implies Higher-Capacity Casks For the Same Weight Limits

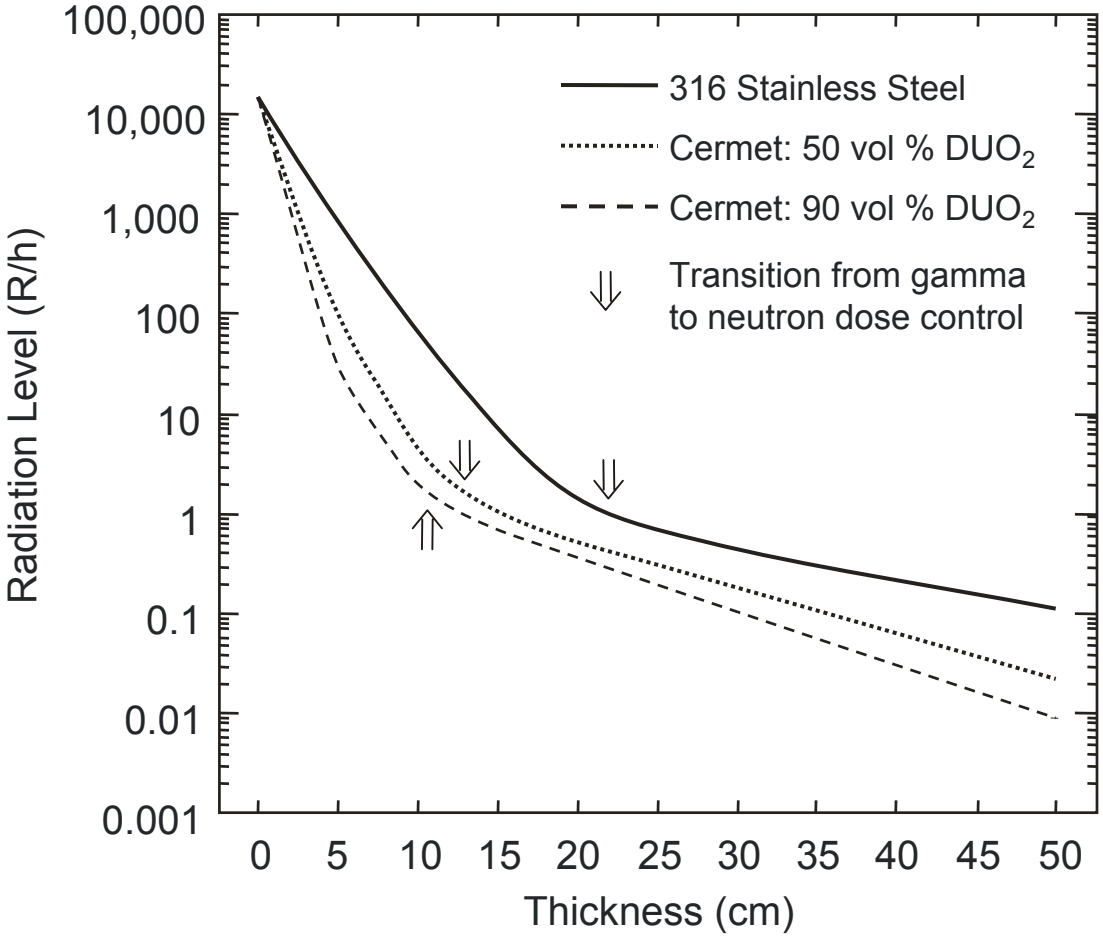

Cermets Maximize Cask Capacity

- Better shielding materials result in higher-capacity SNF casks for a given weight limit
- Cermets are a superior to alternative shielding materials.
- Many alternatives are eliminated because they fail to meet U.S. repository requirements
  - Cement (adverse pH and geochemistry)
  - Organics (corrosion of waste package)
  - Lead (toxic metals not accepted)
  - Tungsten (high costs)

Cermet Repository Performance: Interiors of Natural Uranium Ore Deposits Are Preserved by Degradation of Uranium Oxides on Outside Surfaces of Deposits

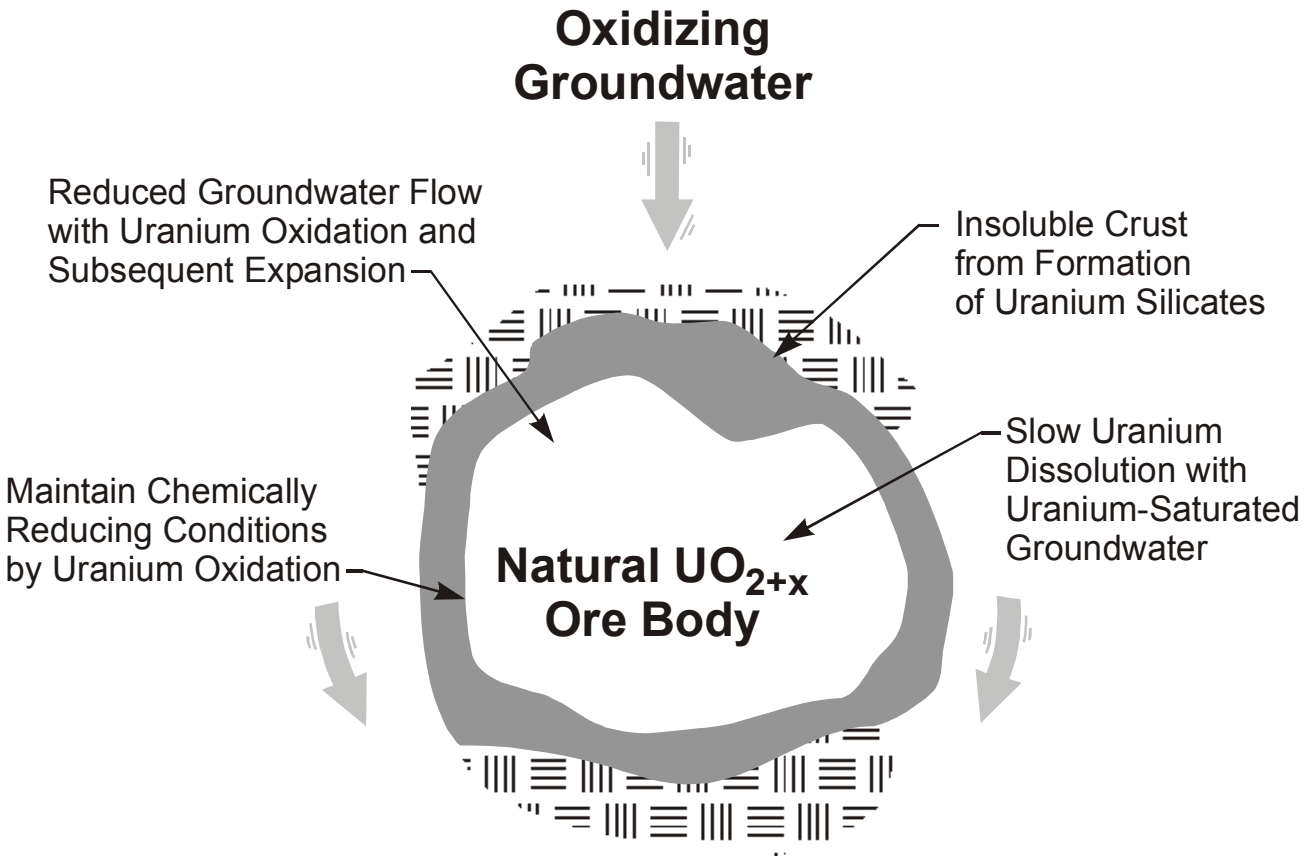
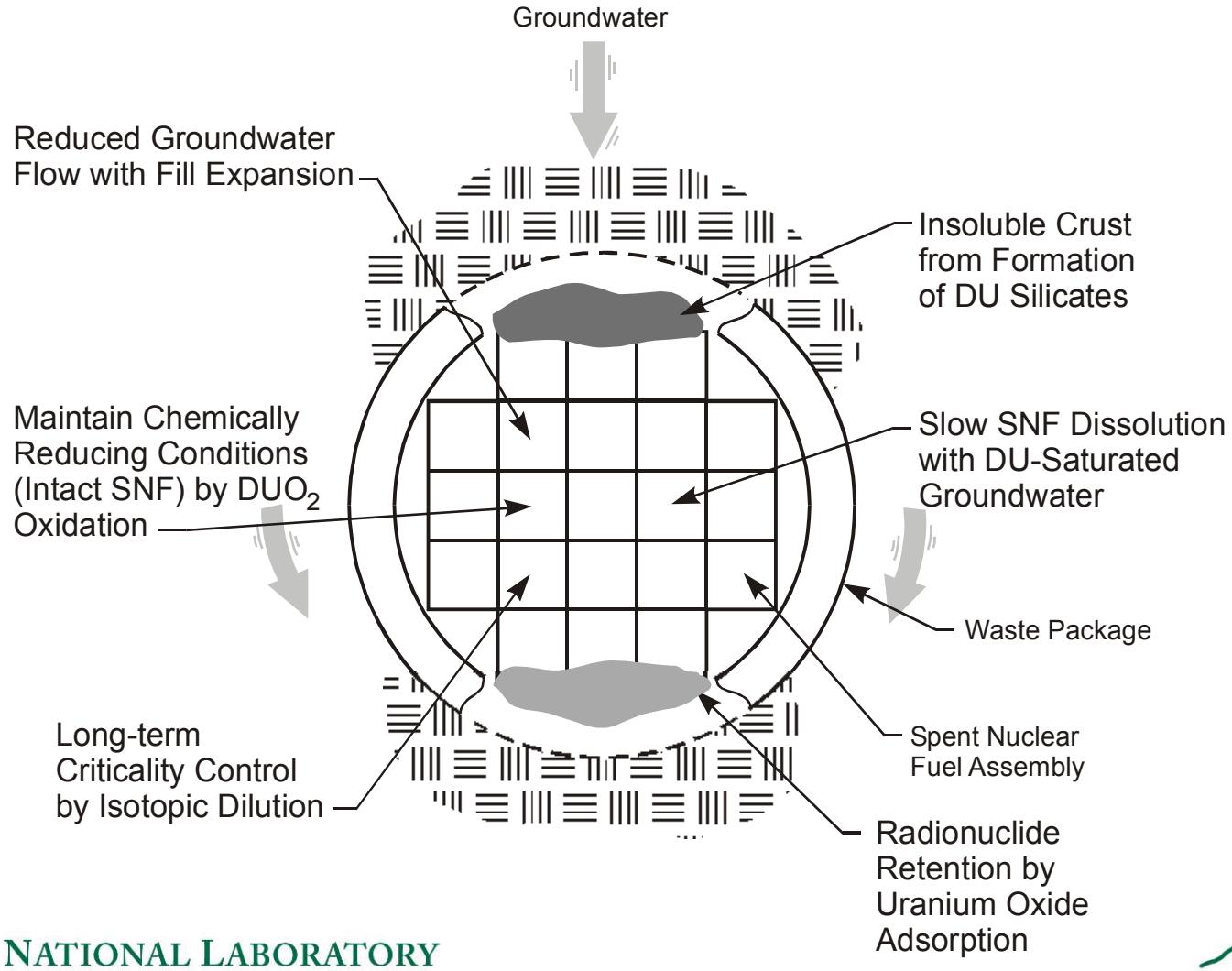
Waste Package with DUO_2 Can Use the Same Mechanisms To Help Preserve SNF