Treatment of Uranium and Thorium Chips at the DOE Sites

Juan J. Ferrada

Oak Ridge National Laboratory*
P.O. Box 2008
Oak Ridge, Tennessee 37831-6179
Tel: (865) 574-4998
e-mail: **ferradajj@ornl.gov**

Greg Hulet

Idaho National Engineering and Environmental Laboratory
Tel: (208) 526-0283
e-mail: **hag@inel.gov**

Richard Grondin

Perma-Fix Environmental Services, Inc.
Tel: (509) 627-2160
e-mail: **grondinr@msn.com**

Prepared for Presentation at
2003 Spring National Meeting; American Institute of Chemical Engineers
New Orleans, Louisiana
Wednesday, April 2, 2003

AIChE shall not be responsible for statements or opinions contained in
Papers or printed in its publications

American Institute of Chemical Engineers
3 Park Ave., New York, New York 10016-5991

The submitted manuscript has been authored by a contractor of the U.S. Government
under contract DE-AC05-00OR22725. Accordingly, the U.S. Government retains a
nonexclusive, royalty-free license to publish or reproduce the published form of this contribution,
or allow others to do so, for U.S. Government purposes.

---

*Oak Ridge National Laboratory, managed by UT-Battelle, LLC, for the U.S. Department of Energy under contract DE-AC05-00OR22725.

Treatment of Uranium and Thorium Chips at the DOE Sites

Juan J. Ferrada, Oak Ridge National Laboratory
Greg Hulet, Idaho National Engineering and Environmental Laboratory
Richard Grondin, Perma-Fix Environmental Services, Inc.

INTRODUCTION

The objective of this paper is to report the results of the first article test (FAT) activities to evaluate a vendor and the process to treat and dispose of the uranium and thorium chips in the U.S. Department of Energy (DOE) complex. In addition, this paper discusses the viability of the process for those sites that have these types of chips.

The DOE complex has these two unique wastes in significant quantities because they have been produced as machining and tooling process residues. The DOE Waste Elimination Team (WET) surveyed the entire DOE complex to determine the location and quantity of uranium and thorium chips that require treatment. This survey revealed depleted uranium (DU) and thorium in a variety of forms and matrices, including chips, foil, sludge, shavings, turnings, and larger shapes, mixed with a whole spectrum of contaminants. Generally, the uranium and thorium are either in the form of a pure metal or an oxide. Because these chips are pyrophoric, they are commonly stored under mineral or diesel oil or other liquid, though some chips recovered in remedial actions were mixed with soil. Therefore, common contaminants are heavy metals, polychlorinated biphenyls (PCBs), and spent solvents.

The site activities that generated uranium and thorium chips were typically performed in support of government defense programs that were sponsored by DOE and its predecessor agencies, the U.S. Atomic Energy Commission and the Energy Research and Development Administration. Based on contributions from 26 sites, the current total inventory of uranium chip–bearing materials (including stabilizing oils) is estimated to range from 192,690 to 194,670 kg. Most of the uranium chip inventory is found at seven sites: East Tennessee Technology Park (ETTP), Fernald, Hanford Site, Los Alamos National Laboratory (LANL), Paducah Gaseous Diffusion Plant, Rocky Flats Environmental Technology Site (RFETS), and the Oak Ridge Y-12 Complex. This inventory is found in nearly 1900 drums as well as in a variety of other types of containers. Table 1 indicates the DOE inventory of materials containing uranium and thorium chips.

To address the problem, the WET, through UT-Battelle, LLC, issued a statement of work and a request for proposal (RFP). Five companies responded to the RFP. The evaluation panel selected a vendor, based on criteria that balanced expected performance and overall evaluated price. Following the panel's recommendation, UT-Battelle initiated a basic order agreement (BOA) with Perma-Fix Environmental Services, a waste management firm with waste treatment facilities in Tennessee and Florida. An audit was conducted at the Perma-Fix site to ensure that the uranium and thorium chips would be treated (1) within appropriate industrial safety and hygiene practices, (2) via appropriate process technologies, and (3) in compliance with the pertinent regulatory framework.

Table 1. Inventory of Uranium and Thorium Chips at the DOE Facilities

Site	Material Description	Number and Type of Containers	Mass (kg)
Argonne National Laboratory–East	Uranium metal shot	151 bottles	162.2
Pacific Northwest Laboratory	Chips mixed with lead in plastic bag Pyrophoric chips in oil with PCBs	1 plastic bag 25 pipe sections	2.3 320
ETTP	Depleted chips mixed with metal alloys in various drums	11 drums	1646.6
Fernald	Chips and turnings in 5- to 85-gal drums	57 drums	3841
Hanford	Excavation of previously disposed of barrels containing oil-soaked chips -Excavated containers -Containers to be excavated	 260 drums 924 drums	 21,840 77,644
LANL	DU chips Turnings in oil/diesel fuel DUF_6 chips in diesel oil	76 drums 53 drums 17 metal containers	3040–5320 3041 0.4
Lawrence Berkeley National Laboratory	Metal, foil, and shavings (some dry and some in oil)	7 glass containers 2 metal containers	2.44
Lawrence Livermore National Laboratory	Sealed food pack cans	120 food pack cans	
Paducah	Natural and depleted chips from machining operations	4 B-12 boxes	~3630
RFETS	Depleted chips, most of which are submerged in mineral oil in various drums Mixture of chips and oxidized chips in various drums	134 drums 320 drums	29,100 44,519
Y-12 Complex	DUF_6 sludge underwater Turnings Metal scrap and oxides (DU and natural U)	19 drums 11 drums 9 (4-L) cans	118.55 3740 41.5
Total			192,690 – 194,670

One of the requirements of the BOA specified that Perma-Fix perform a FAT to demonstrate the efficacy of the process. The WET coordinated the FAT with the RFETS, which supplied the four drums of chips for the test. This test demonstrated Perma-Fix's capability to treat, transport, and dispose of the treated chips, satisfying Envirocare of Utah's waste acceptance criteria. These criteria must be met before any subcontracts could be issued for the full-scale processing of the DOE inventory.

PROCESS DESCRIPTION

Figure 1 represents a logic diagram describing the mechanisms by which Perma-Fix makes process decisions based on the waste characterization of the uranium and thorium chips. In the FAT, this logic diagram has been applied to treat the Rocky Flats uranium chips.

The Rocky Flats chips have all been packaged with mineral oil; some have also then been covered with soil. All carry the F001 and F002 listed Resource Conservation and Recovery Act (RCRA) codes. Most of the wastes also carry RCRA characteristic hazard codes and contain PCBs >50 ppm. These pathways are shown in red lines. The Rocky Flats chips exist in two different physical forms: those mixed with soils and those mixed with oils (free liquids). How these wastes are handled and treated depends on this waste characteristic. If the wastes are characteristically hazardous, there is an additional regulatory requirement to treat the organics to meet the universal treatment standards (UTS), as defined in 40 CFR 268.48. Much of the Rocky Flats uranium chip waste contains cadmium >1 ppm, making it RCRA characteristically hazardous. If PCBs are present at levels >50 ppm, the solid waste must be treated to remove the PCBs. The liquid waste stream must be treated to destroy the PCBs before it is sent to the Diversified Scientific Services, Inc. (DSSI)[2] boiler for organic destruction. Any liquids present in the waste will be removed and treated separately. All solid wastes will be stabilized in a cement grout and then disposed of at Envirocare. Solid wastes that are RCRA characteristic will first be washed to remove organics to meet UTS. The solids will then be stabilized. The liquids from the washing will be sent to DSSI for destruction in its boiler, provided that the original waste did not contain PCBs >50 ppm. All liquid wastes for which the original waste contained PCBs >50 ppm will be sent to the Safety-Kleen (PPM) process for destruction of the PCBs and then sent to the DSSI boiler for destruction of remaining organics.

FIRST ARTICLE TESTING

A series of operational steps constituted the process by which Perma-Fix treated the uranium chips during the FAT activities. The waste treatment and sampling activities involved (1) the sampling and characterization of incoming waste; (2) the decanting and sampling of the dirty liquids in which the waste is packed and the separation of the chips from any soil solids; (3) the sampling of solids; (4) the rinsing of chips and turnings with solvent and sampling of the solvent; and (5) the grouting of prepared waste and sampling of the cured grout/chip mixture. A parallel operation to these stages is the preparation of the grout according to the recipe developed during the bench-scale testing campaign.

---

[1] F001 and F002: listed hazardous wastes, 40 CFR 261.31(a). These wastes are primarily organics containing spent halogenated solvents.
[2] DSSI is a subsidiary of Perma-Fix Environmental Services.

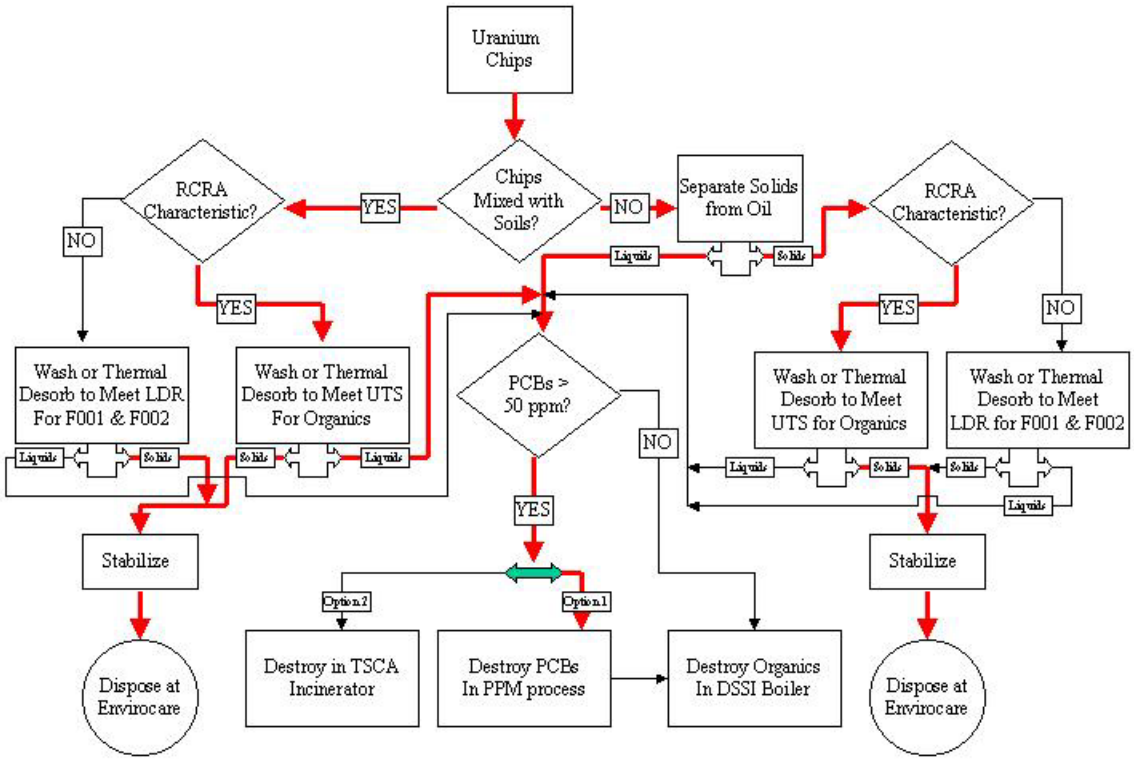

Fig 1. Logic diagram representing the Perma-Fix process system to treat uranium and thorium chips.

Characterization of Incoming Waste—Sampling Activity

To perform the sampling and inspection, all of the wastes from the original four drums were repackaged into 55-gal drums.

Repackaging of Waste in Serviceable Drums

The original drums will require replacement due to their generally deteriorated condition. Most of the RFETS DU chips and turnings are contained in seriously damaged 30-gal drums overpacked in 55-gal drums. In the case of the four demonstration test drums for the FAT, the waste from these drums was repackaged at the time of characterization sampling. The repacking of wastes prior to treatment is performed in an empty B-12 box, which is used to place a new drum that will receive the blanketing oil and the chips and turnings from the original drum.

Solvent Extraction of Uranium Chips and Turnings

Extraction of contaminants and draining of mineral oil from the DU chips is performed in multiple stages. The first stage is performed in a solvent extraction system. At the end of the extraction operation, the solvent is drained from the system and stored for further processing.

Solvent Rinsing of Uranium Chips and Turnings

The solvent rinsing of the uranium chips and turnings is performed in two separate drums. One drum receives the chips and turnings in a strainer basket, and the other drum contains the solvent. The two-drum system for washing the chips is illustrated in Fig. 2. After the required solvent extractions have been completed, all decantable solvent is removed and stored for further processing.

Further processing of the chips and turnings remains on hold until analytical data are received from the laboratory and evaluated for their implications. The data are used to determine whether the waste meets land disposal restrictions (LDR) for toxicity characteristic and underlying hazardous constituents of the waste.

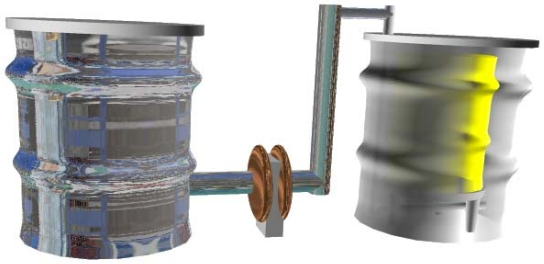

Fig. 2. Solvent extraction system.

Grouting of the Rinsed Chips and Turnings

Once the analytical data from the extraction and rinsing operations indicate acceptable levels of contaminants, grouting of the rinsed chips and turnings may proceed. The grout and the rinsed chips and turnings are mixed in the final disposal container, a B-12 box. Grout and waste layers should be alternated in filling the container, with grout added first and then the rinsed waste. After each addition of rinsed chips and turnings, these wastes are submerged in the grout layer, using rakes as illustrated in Fig. 3.

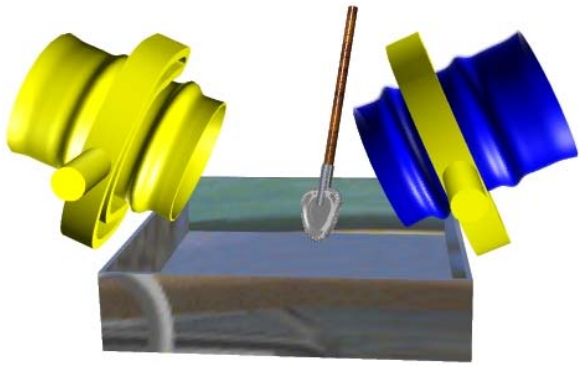

Fig. 3. Grouting system.

RESULTS

Results for Solvent Extraction

Table 2 indicates the results for two different solvents applied to the waste during the solvent extraction process. Solvent #7 shows results much superior to those shown by solvent #6. Similar comparisons were made with the other five solvents.

Results for the Grouted Solids

The current status of the encapsulation process indicates that the drum containing mainly chips and oil was successfully extracted, rinsed, and grouted with the proprietary grout. Samples of the solidified material were taken, and results of the analysis indicated that the material passes the LDR for metals and organics. Material from drums that contained chips, oil, tetrachloroethylene/polychloroethylene (up to 2%), and more soil-like material was subjected to additional extraction and rinsing stages. Currently, the analytical process is under way to demonstrate that this material passes the LDR for metals and organics.

Results for the Secondary Waste Streams

Once all the rinsing phases of the process are completed, the collected liquids will be combined and sampled for compliance with the waste acceptance criteria of the Perma-Fix facilities for liquid treatment at its licensed incinerator.

Table 2. Summary of Analytical Results from the Bench Tests

Analytical Parameter	Range of Analytical Result	Applicable LDR Standard
Solvent #6—Rinsed DU Chips and Fines		
1,1-Dichloroethene	< 0.7	6
1,2-Dichloroethene	< 0.8	30
Trichloroethylene	1.8–< 1.0	6
Toluene	< 0.8	10
1,1,2-Trichloroethane	< 1.0	6
Tetrachloroethylene	< 1.0	6
Ethylbenzene	< 0.9	10
Xylenes	< 3.0	30
Acenaphthene	< 0.3	3.4
Acetophenone	< 0.5	9.7
Butyl benzyl phthalate	< 0.6	28
m- and *p*-Cresol (3- and 4-methylphenol)	21–< 1.5	5.6
2,6-Dichlorophenol	< 1.0	14
2,4-Dimethylphenol	< 0.7	14
Fluorene	< 0.2	3.4
Naphthalene	< 0.2	5.6
Phenanthrene	INT*–< 0.2	5.6
Phenol	INT*–< 0.6	6.2
2,3,4,6-Tetrachlorophenol	< 1.0	6
Organics in Solvent #7—Rinsed DU Chips and Fines		
1,1-Dichloroethene	< 4.4	6
1,2-Dichloroethene	< 5.1	30
Trichloroethylene	< 6.7	6
Toluene	< 5.1	10
1,1,2-Trichloroethane	< 6.4	6
Tetrachloroethylene	< 7.0	6
Ethylbenzene	< 6.0	10
Xylenes	< 17	30
Acenaphthene	< 0.3	3.4
Acetophenone	< 0.5	9.7
Butyl benzyl phthalate	INT*–< 0.6	28
m- and *p*-Cresol (3- and 4-methylphenol)	< 1.6	5.6
2,6-Dichlorophenol	< 1.0	14
2,4-Dimethylphenol	< 0.7	14
Fluorene	< 0.25	3.4
Naphthalene	< 0.2	5.6
Phenanthrene	INT*–< 0.2	5.6
Phenol	INT*–< 0.7	6.2
2,3,4,6-Tetrachlorophenol	< 1.0	6

CONCLUSIONS

The results of the FAT with material from Rocky Flats indicate that the Perma-Fix process is appropriate to treat uranium and thorium chips. The process requires bench-scale treatment of sampled material to determine the best solvent extraction and washing process. The grouting process is effective, and it is expected that the treated waste will pass the Envirocare LDR. The process handles the material in a manner that is compatible with the intrinsic pyrophoric characteristics of the chips. The secondary waste streams coming from the washing and extraction processes are treated within the Perma-Fix facilities by incineration. Once the FAT is finalized, future users will be able to send their thorium and uranium chips to the Perma-Fix facilities to be treated accordingly.

ACKNOWLEDGEMENTS

The authors of this paper would like to express their sincere gratitude for the support received from the Waste Elimination Team of the U.S. Department of Energy Transuranic and Mixed Waste Focus Aream.