Dynamical Filamentation in Frequency-Locked Broad-Area Semiconductor Lasers

Y. Liu and Y. Braiman

Center for Engineering Science Advanced Research, Computing and Computational Sciences Directorate
Oak Ridge National Laboratory, Oak Ridge, TN 37831-6355

Abstract We experimentally observed giga-hertz (GHz) complementary intensity oscillations in different far-field modes (lobes) of a broad-area laser (BAL) subject to an optical injection from a single-mode laser. Such oscillations occur when the BAL is frequency-locked to the injection light while still having multiple far-field modes. The GHz complementary oscillations indicate a dynamical filamentation in the frequency-locked BAL.

1. Introduction

Optical injection has been widely used in broad-area semiconductor lasers to improve the laser beam quality and the spectrum width and accordingly to obtain a single mode high power light source. Successful experiments have achieved the diffraction-limited high power from broad-area amplifiers or BALs using optical injection-locking [1-3]. It is found that the performance of the broad-area amplifiers or lasers is limited by the onset of filamentation, which results in a degradation of the far-field pattern. While many theoretical and experimental works on the formation and evolution of filaments have been reported [4-6], less is understood about the temporal dynamics in the BALs under external injection. In this work, we describe experimental observations of GHz complementary intensity oscillations in different far-field modes of a BAL subject to an optical injection from a single-mode laser. Such oscillations occur when the BAL is frequency-locked to the injection light while still having multiple far-field modes. The GHz complementary oscillations indicate a dynamical filamentation in the frequency-locked BAL. Investigation of dynamical filamentation is important in understanding the mechanism of achieving diffraction-limited high power from the BAL based on optical injection.

2. Experiments

The BAL (SDL2360) in the experiment has an emitting aperture of 100 μm×1 μm and is capable of emitting a maximum output power over 1.2 W. The laser spectrum ranges between 805 and 809 nm with a bandwidth of about 2 nm. For the drive current well above its threshold, there are multiple longitudinal modes with the mode separation around 0.083 nm. The laser emits a far-field pattern subtended by 12°×32°. The single-mode master laser used in this experiment is a wavelength-tunable laser diode (TOPTICA DL-100) with a linewidth of 1 MHz and a maximum output power of 30 mW. An experimental scheme is shown in Fig. 1. The cylindrical lens and the collimation lens are used to adjust the angle of the injection beam. The far-field pattern of the BAL is monitored with a CCD array. In the case when there are multiple modes in the far-field pattern, we use a slit to select a particular mode to measure its optical spectrum and temporal variations. In this experiment, we use two photodiodes (12 GHz bandwidth) to simultaneously measure the temporal variations of two far-field modes to study the phase relationship between the two temporal signals.

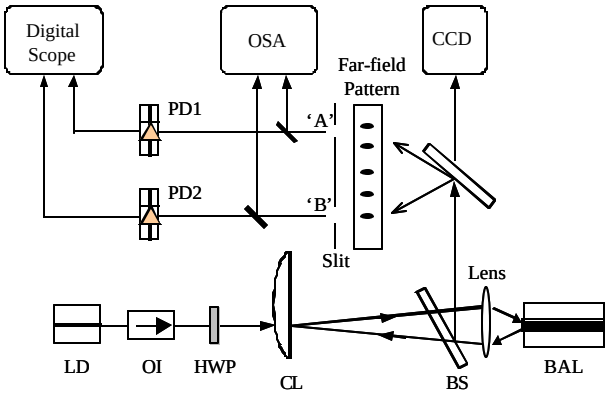

Fig. 1 Schematic experimental setup. LD: single-mode laser diode, BAL: broad-area laser, OI: optical isolator, CL: cylindrical lens, HWP: half-wave plate, BS: beam splitter, OSA: optical spectrum analyzer.

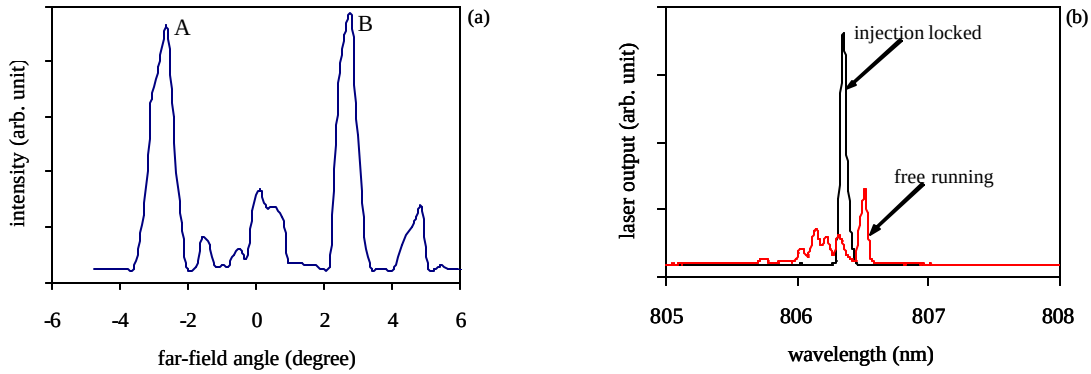

Fig. 2 (a) Far-field intensity distribution and (b) optical spectrum of BAL under optical injection at 806.3 nm.

Figure 2 shows the far-field light intensity distribution (a) and the optical spectrum (b) taken from 'A' in (a). The drive current is 1.3 times of the threshold and the corresponding laser output power is about 100 mW. The injection light power is around 5 mW (measured in front of the collimation lens) and the injection laser wavelength is 806.3 nm. The injection angle is about 10º with respect to the normal direction of the BAL front facet. The far-field pattern in Fig. 2(a) shows two main modes and each has the divergence angle around 1º. In Fig. 2(b), we plot optical spectra of the BAL with and without the optical injection. The optical spectrum clearly shows that the BAL is frequency-locked to the injection light. Similar spectrum is also observed in other modes in Fig. 2(a). The BAL far-field pattern clearly shows two main modes even when the frequency is locked to the injection light.

We simultaneously measured temporal intensity variations of two main modes ('A' and 'B') in Fig. 2(a) with a pair of high bandwidth photo-receivers. The measured waveforms are shown in a digital oscilloscope with a sampling rate of 20 GHz and a bandwidth of 6 GHz. Figure 3 shows a pair of the typical time series. The two time series show complementary oscillations at a frequency around 1.3 GHz. We found that the oscillation frequency depends on the drive current. The slight difference between two waveforms is due to the weak far-field modes. Such oscillations strongly indicate that there is a fast filamentation within the BAL under the optical injection.

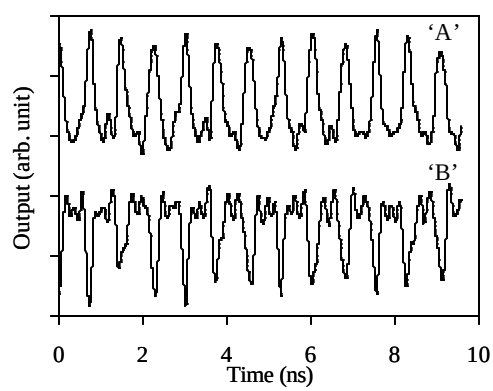

Fig. 3 Time series simultaneously measured at 'A' and 'B' in Fig. 2(a).

3. Summary

In conclusion, we have experimentally observed GHz complementary temporal oscillations in different far-field modes of a BAL subject to an optical injection. Such oscillations occur when the BAL is frequency-locked to the injection light while still have multiple far-field modes. Our observation indicates that there exists a GHz dynamical filamentation in the frequency-locked BAL.

Acknowledgments This research was supported by the U.S. Department of Energy, Office of Basic Energy Sciences, and by the Office of Naval Research. The Oak Ridge National Laboratory is managed for the U.S. DOE by UT-Battelle, LLC, under contract No. DE-AC05-00OR22725.

4. References

[1] L. Goldberg, H.F. Taylor, J.F. Weller, "Injection locking of coupled-stripe diode laser array," Appl. Phys. Lett. **46**, 236-238 (1985).

[2] H. Horiuchi, T. Shimura, T. Omatsu, O. Matoba, K. Kuroda, "Narrow bandwidth operation of high-power broad-area diode laser using cascaded phase-conjugate injection locking," Appl. Phys. B **68**, 1021-1025 (1999).

[3] Y. Liu, H. K. Liu, and Y. Braiman, " Injection locking of individual broad-area lasers in an integrated high-power diode array," Appl. Phys. Lett. **81**, 978-980 (2002); "Simultaneous injection locking of couples of high-power broad-area lasers driven by a common current source," Appl. Opt. **41**, 5036-5039 (2002).

[4] M. Tamburrini, L. Goldberg, and D. Mehuys, "Periodic filaments in reflective broad area semiconductor optical amplifiers," Appl. Phys. Lett. **60**, 1292-1294 (1992).

[5] R. J. Lang, D. Mehuys, A. Hardy, K. M. Dzurko, and D. F. Welch, "Spatial evolution of filaments in broad area diode laser amplifiers," Appl. Phys. Lett. **62**, 1209-1211 (1993).

[6] O. Hess, S. W. Koch, and J. V. Moloney, "Filamentation and beam propagation in broad-area semiconductor lasers," IEEE. J. Quantum Electron. **31**, 35-43 (1995).