# Nuclear Hydrogen Production: Isolating The Nuclear Reactor And Chemical Facilities

Dr. Charles Forsberg

Speaker: Dr. Per Peterson
University of California–Berkeley

Oak Ridge National Laboratory
P.O. Box 2008; Oak Ridge, TN 37831-6179
Tel: (865) 574-6783; E-mail: forsbergcw@ornl.gov

Session: Environmental Sciences: General
2002 American Nuclear Society Winter Meeting
Washington D.C. ; Tuesday, November 19, 2002

**The submitted manuscript has been authored by a contractor of the U.S. Government under contract DE-AC05-00OR22725. Accordingly, the U.S. Government retains a nonexclusive, royalty-free license to publish or reproduce the published form of this contribution, or allow others to do so, for U.S. Government purposes. File name: Hydrogen.AHTR.Interface.ANS.2002**

# Hydrogen Demand Is Large and Growing Rapidly

- World consumes 50 million tons of $H_2$/year
  - ~80% intentionally produced; remainder, by-product $H_2$
  - 200 GW(th) if the $H_2$ is burned
  - 4 to 10% growth per year
  - Applications: fertilizer, chemical industry, liquid fuels
- Within decades, the energy to produce $H_2$ in the U.S. may exceed current energy production from nuclear power
- If $H_2$ replaces liquid fuels, $H_2$ demand may exceed electricity demand

# Methods to Make Hydrogen Using Nuclear Energy Are Required; But,

# Making Hydrogen Is Tough!

# Nuclear-Assisted Hydrogen Production Uses High Temperature Heat (to 900°C) To Reduce Energy Requirements For Steam Reforming of Natural Gas

## (Development Program in Japan)

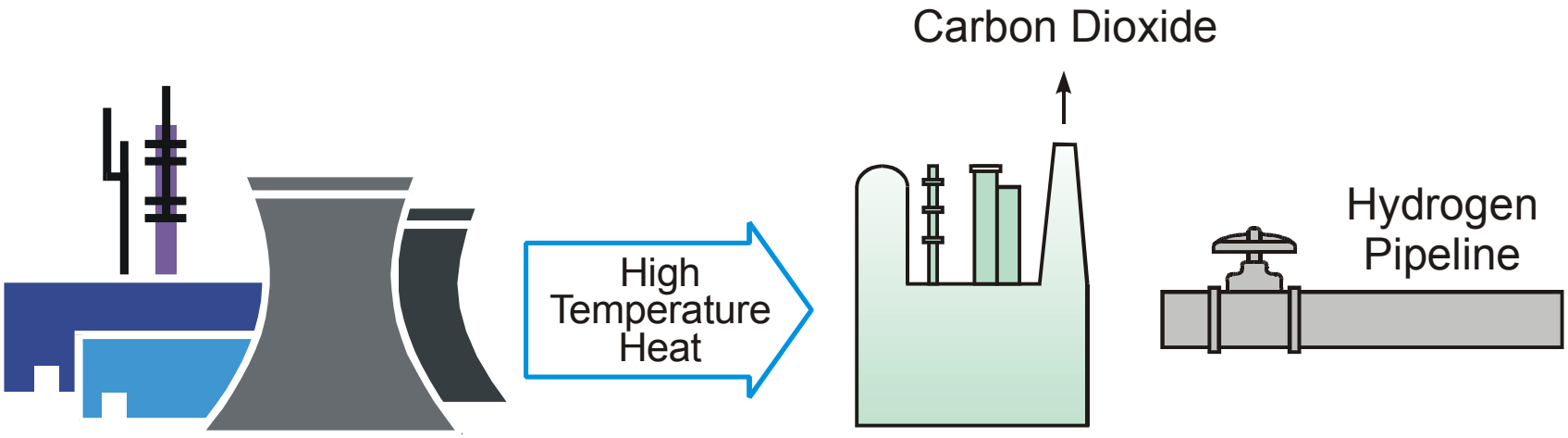


$$CH_4 + 2H_2O \rightarrow CO_2 + 4H_4$$

# Hydrogen Production Using Hot Electrolysis Requires High-Temperature Heat (700-900°C) and Electricity

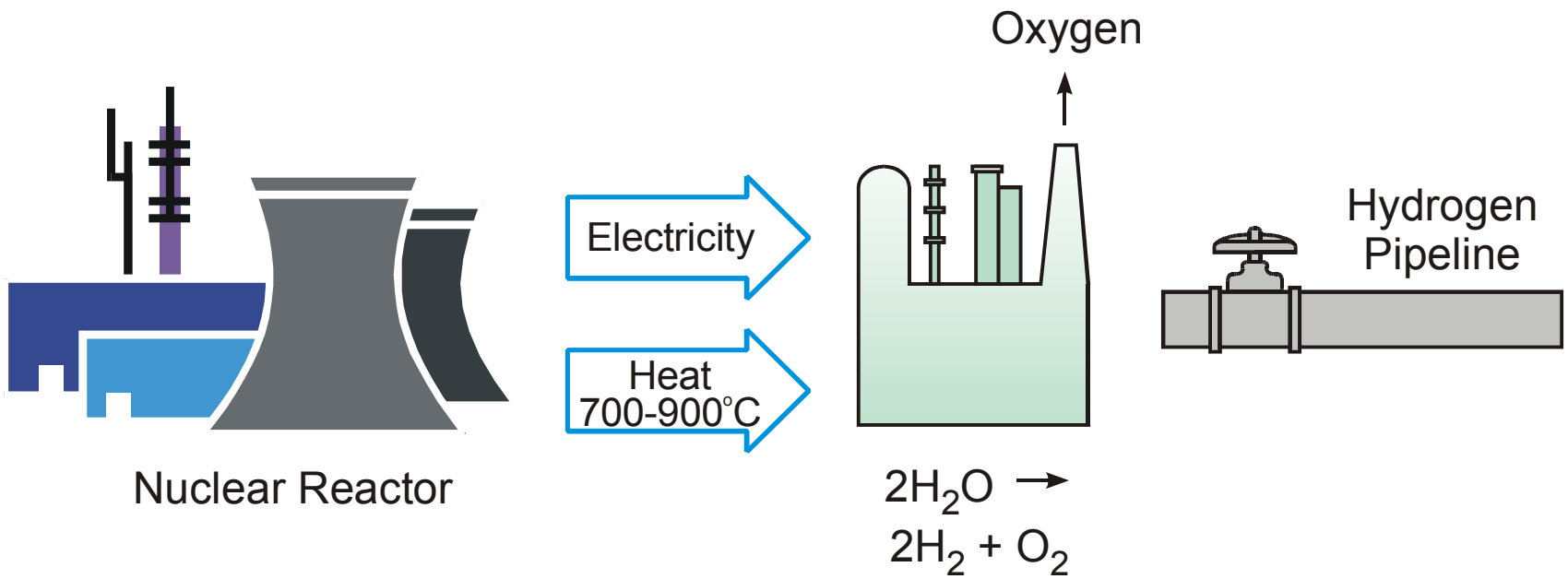

# Thermochemical Processes Convert High-Temperature Heat and Water to $H_2$ and Oxygen

## (Leading candidate: Iodine-Sulfur Process)

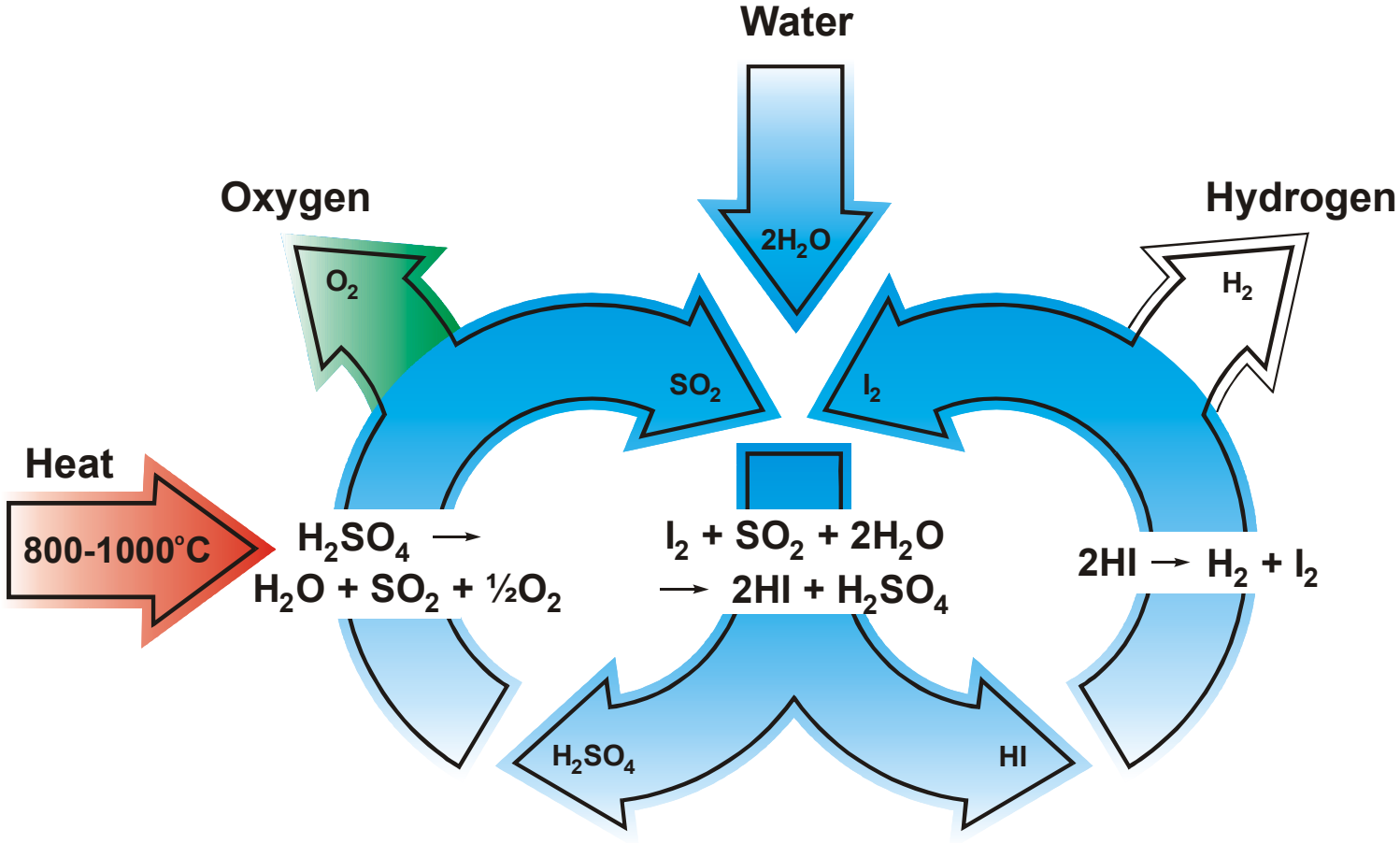

# Hydrogen Production Requirements

- High temperatures (750 to 1000°C)
- Heat delivered at constant temperature
- Low pressure to hydrogen facility
  - Match process requirements
  - Avoid potential releases of toxic chemicals (offsite public safety)
- Avoidance of tritium in product
- Separation of hydrogen chemical plant from the reactor (plant safety)
  - Corrosive chemicals

# Reactor Design Should Follow Process Requirements for Hydrogen Production

**This Approach Yielded the**

**Advanced High Temperature Reactor**

**—A New Reactor Concept—**

# The Advanced High Temperature Reactor (AHTR) Uses a Molten Salt Coolant and a Graphite-Matrix Coated-Particle (HTGR) Fuel

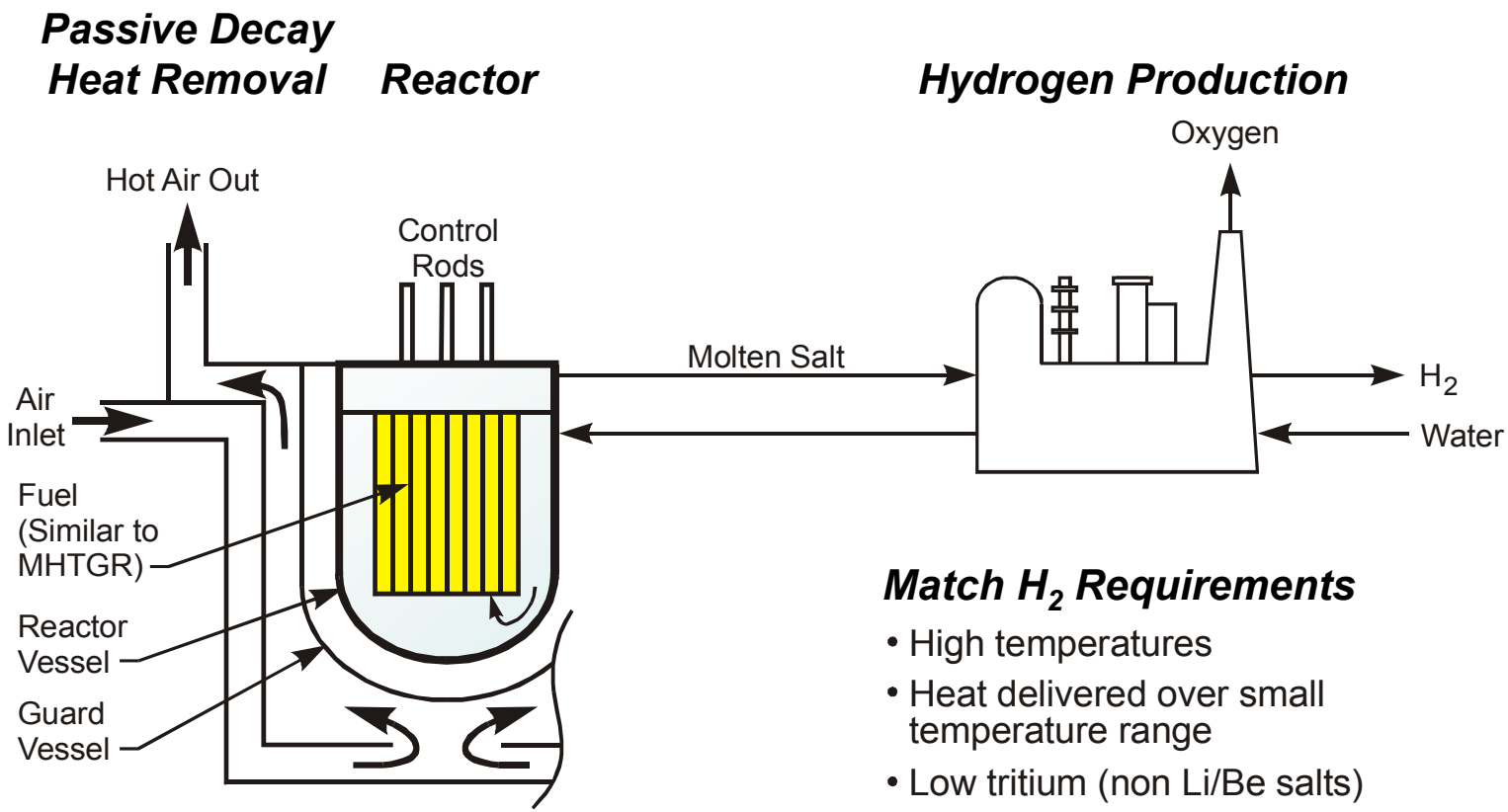


***Match $H_2$ Requirements***

- High temperatures
- Heat delivered over small temperature range
- Low tritium (non Li/Be salts)
- Low pressure (< 0.1 psia)

# Basis for Selection of Reactor Characteristics

# Graphite-Matrix Coated-Particle Fuels Are the Only Proven Fuels That Operate at Required Temperatures for Hydrogen Production

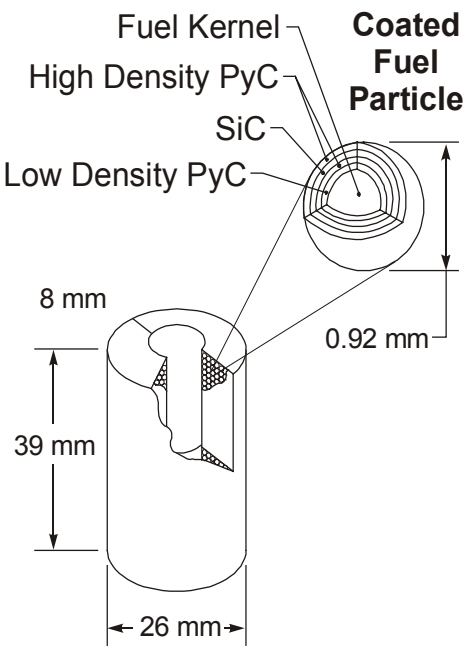


**Fuel Compact**

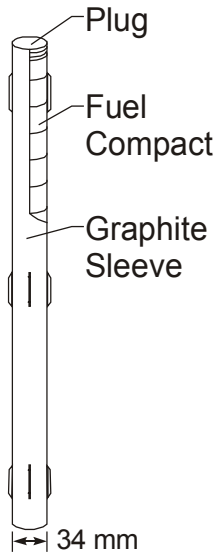


**Fuel Rod**

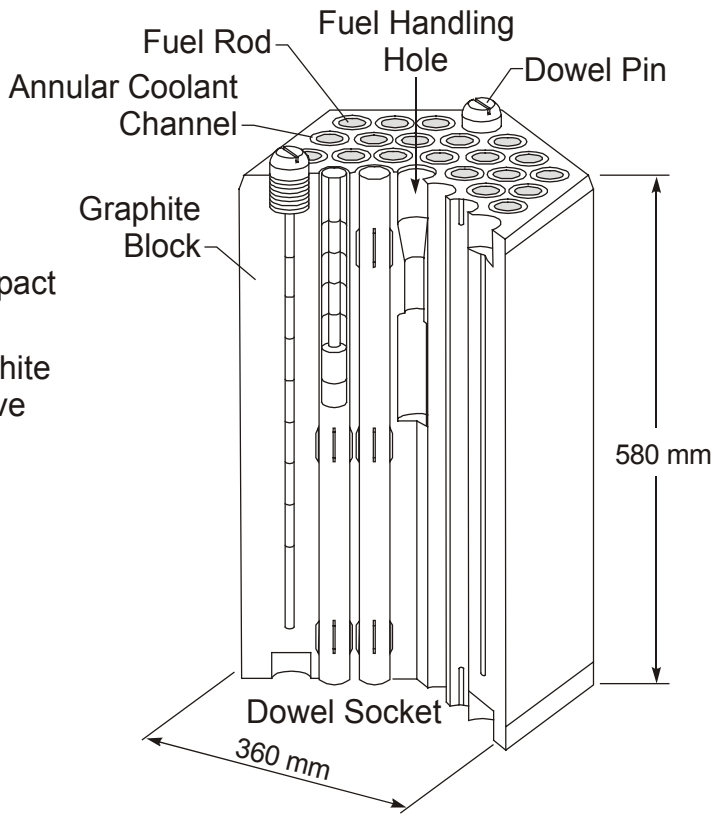


**Fuel Block**

# Molten Salts Are a Low-Pressure Reactor Coolant

## (Avoid Pressurization Risk at Chemical Plant; Minimum Stress on Materials)

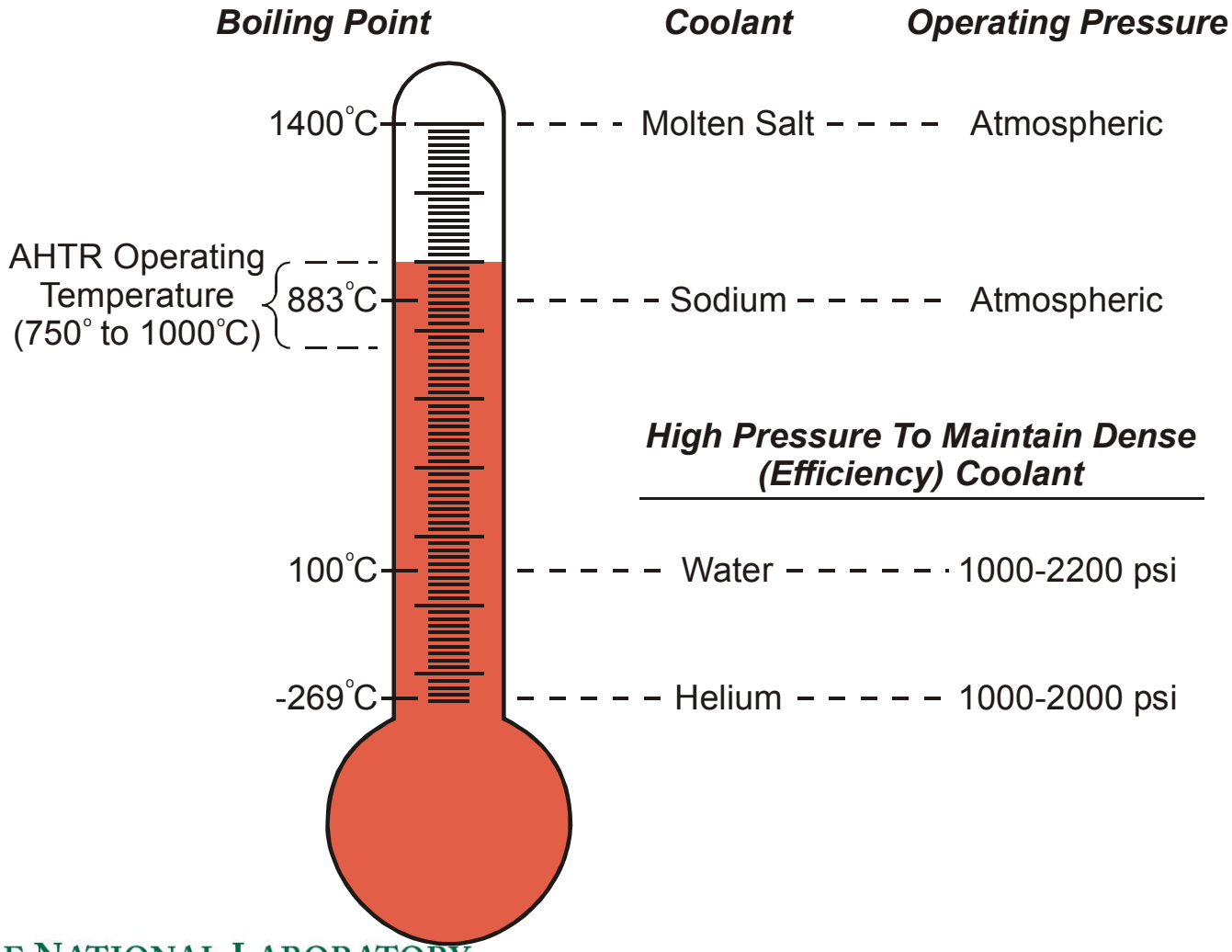

# Liquid Coolants Can Deliver All the Heat Over a Small Temperature Range and Match Hydrogen Production Requirements

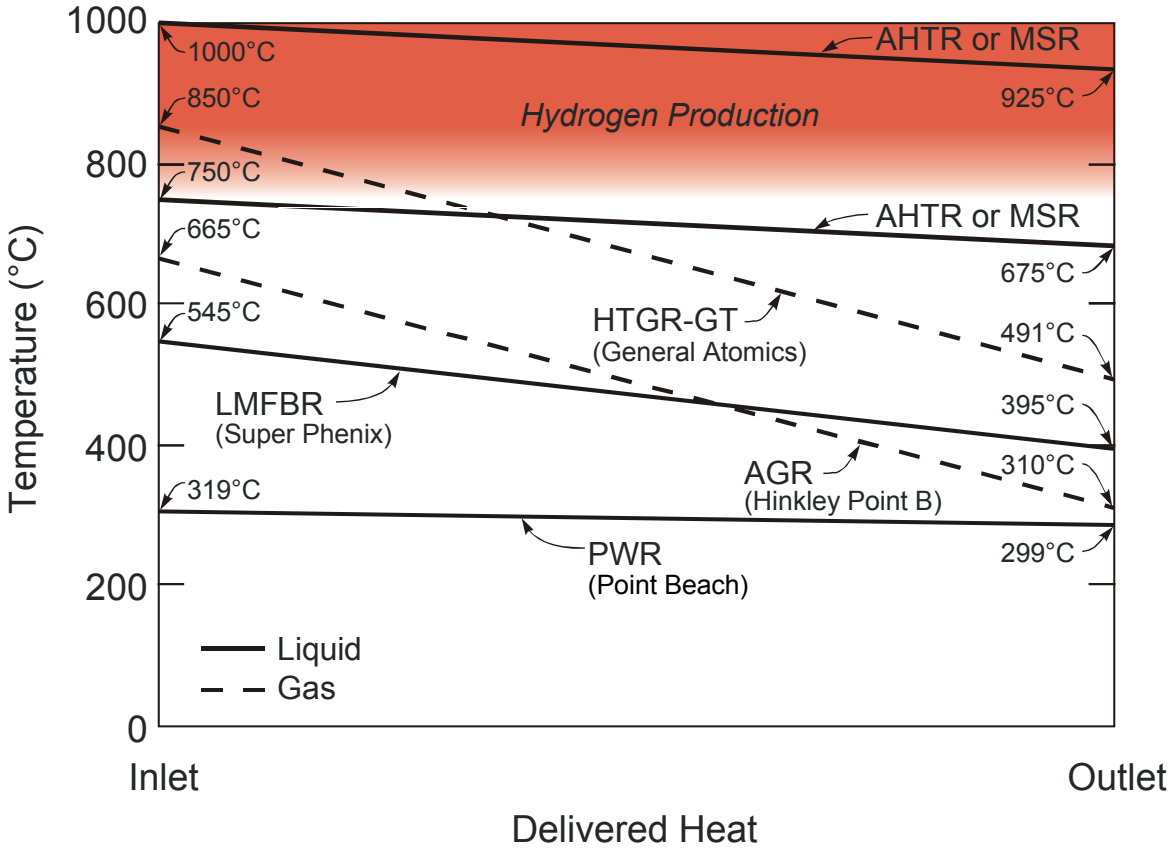

# Molten Salts Are Preferred for Coupling Reactors to Chemical Plants

- Molten salts traditionally used to transport high-temperature heat in chemical plants
- Desirable properties allow efficient low-cost heat transport over distances
  - Low pressure
  - High temperature
  - Very high heat capacity (several times that of sodium)
  - Limited reactivity with water and air

# Conclusions

- Making hydrogen is demanding
- Economics and safety suggest that chemical plant requirements should drive reactor design requirements
- The Advanced High-Temperature Reactor is an initial effort to develop a reactor to match hydrogen production requirements