Depleted Uranium Dioxide–Steel Cermet Multipurpose Casks for Enhanced SNF Protection

Charles Forsberg and Richard Landingham

Speaker: Jonathan Haire

Oak Ridge National Laboratory
P.O. Box 2008; Oak Ridge, TN 37831-6179
Tel: (865) 574-6783; E-mail: forsbergcw@ornl.gov

Monday November 18, 2002

Spent-Fuel Storage, Packaging, Transportation, and Reactor Operations
American Nuclear Society 2002 Winter Meeting
American Nuclear Society
Washington D.C.

The submitted manuscript has been authored by a contractor of the U.S. Government under contract DE-AC05-00OR22725. Accordingly, the U.S. Government retains a nonexclusive, royalty-free license to publish or reproduce the published form of this contribution, or allow others to do so, for U.S. Government purposes. File name: Cermet_Super_cask: Armor.ANS.November.2002

Outline

- Observations
- Traditional Spent Nuclear Fuel (SNF) Management Strategy
- Multipurpose Cask System
- Super Cask
- Conclusions

Observations

- The light-water-reactor (LWR) fuel cycle was designed for recycle of spent nuclear fuel (SNF) and evolved into a once-through fuel cycle
- A once-through system *designed as a once-through system* would be significantly different from the existing one
- Proliferation, safeguards, security (terrorism), and economics suggest that the once-through fuel cycle needs to reexamined
- A new approach to SNF cask operations and design should be considered

Traditional Spent Nuclear Fuel (SNF) Management Strategy

Traditional Approaches to SNF Management Imply Multiple Handling of Individual Assemblies with Associated Costs and Risks

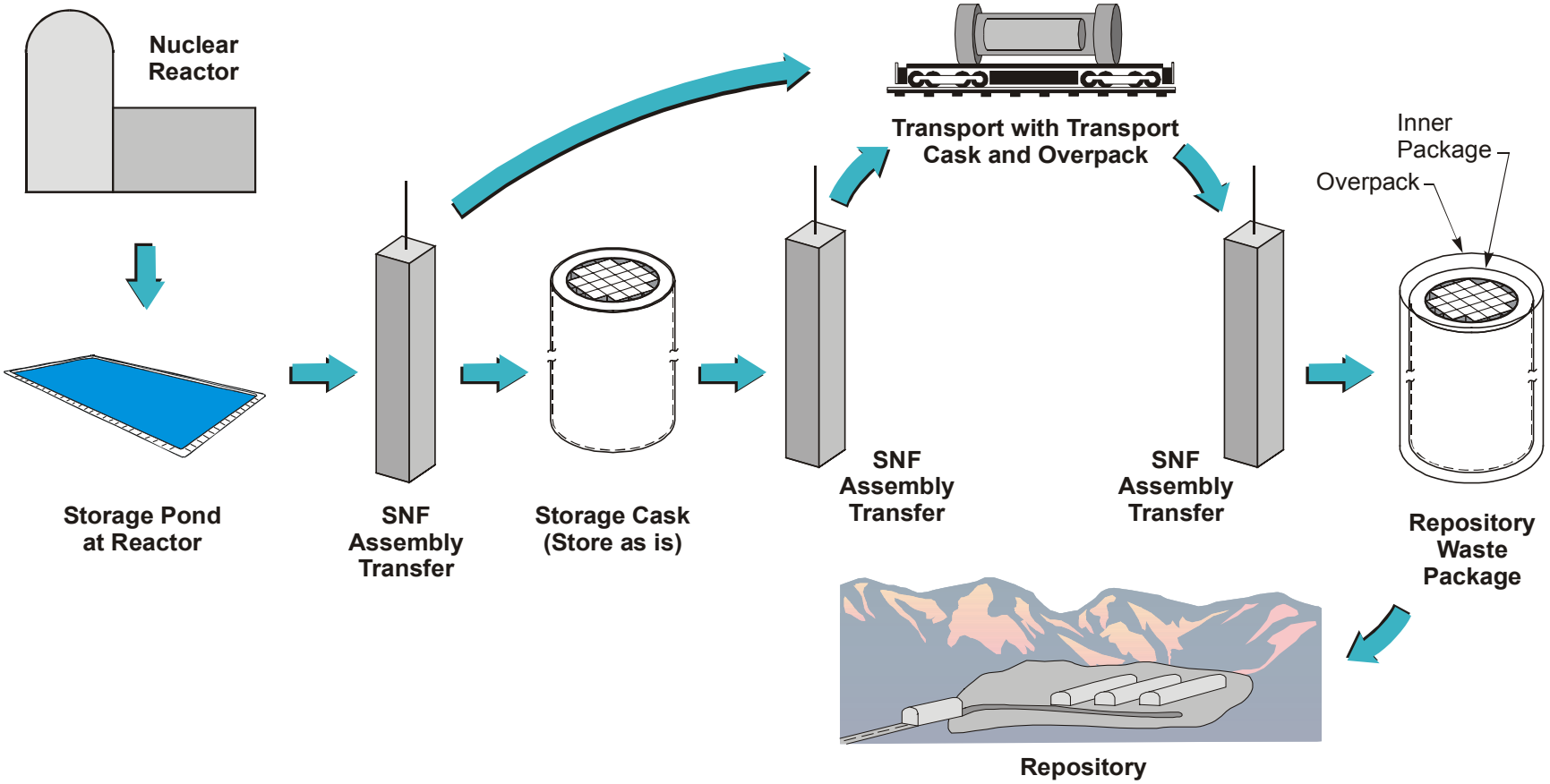

A New SNF System Is Proposed to Accomplish Two Objectives

- Minimize SNF handling
  - Avoid SNF transfer risks
  - Avoid SNF transfer costs
- Transfer SNF quickly into secure packages (Super Casks)

Multipurpose Cask System

SNF Is Placed in a Multipurpose Cask (Mobile 100-ton Vault) and Never Removed

(SNF Is Loaded at Reactor into Cask; Cask Is Used for Storage, Transport, and Disposal)

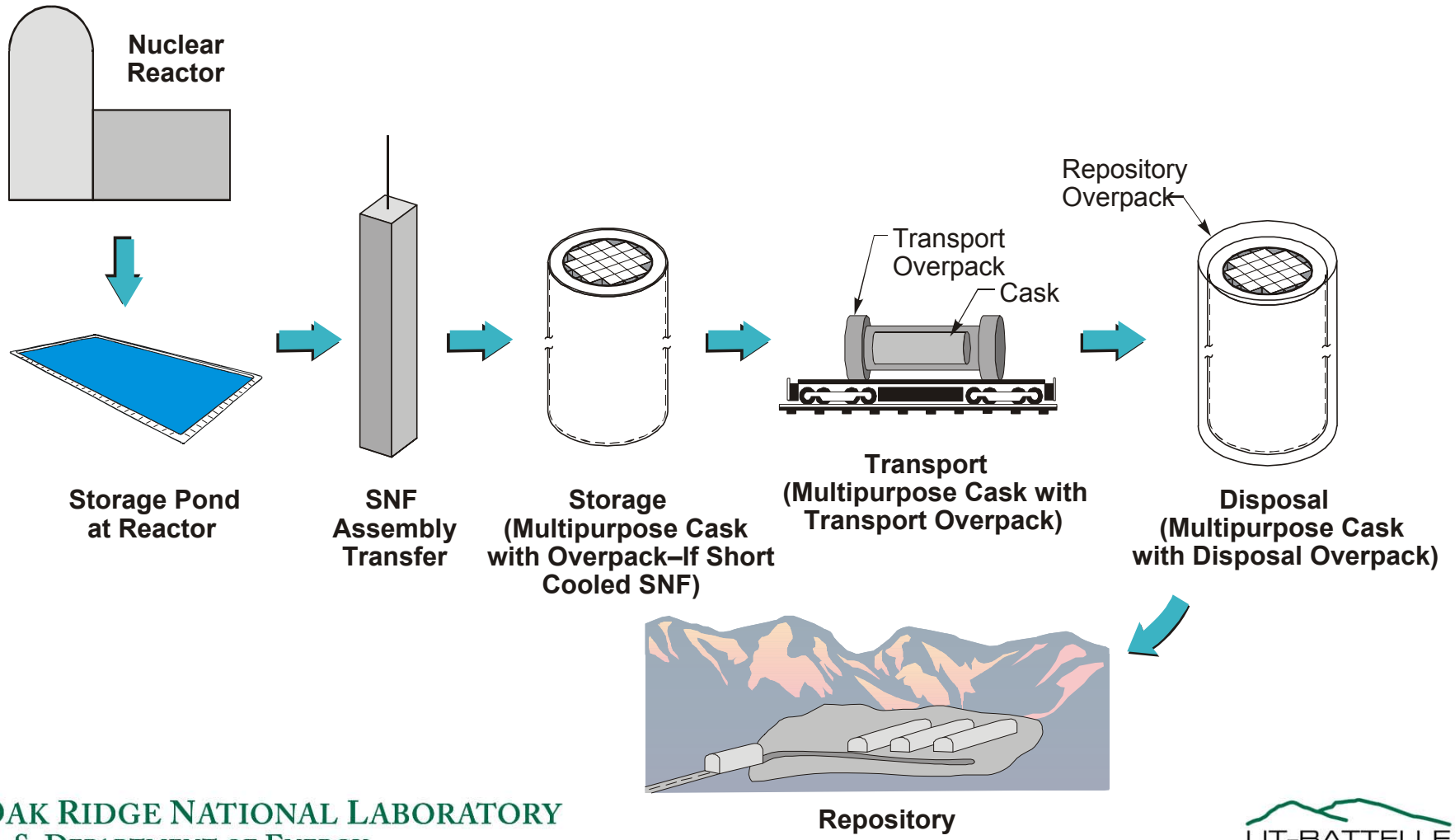

The Multipurpose Cask Has Multiple Functions
(Handling, Shielding, Protection, and Safeguards)

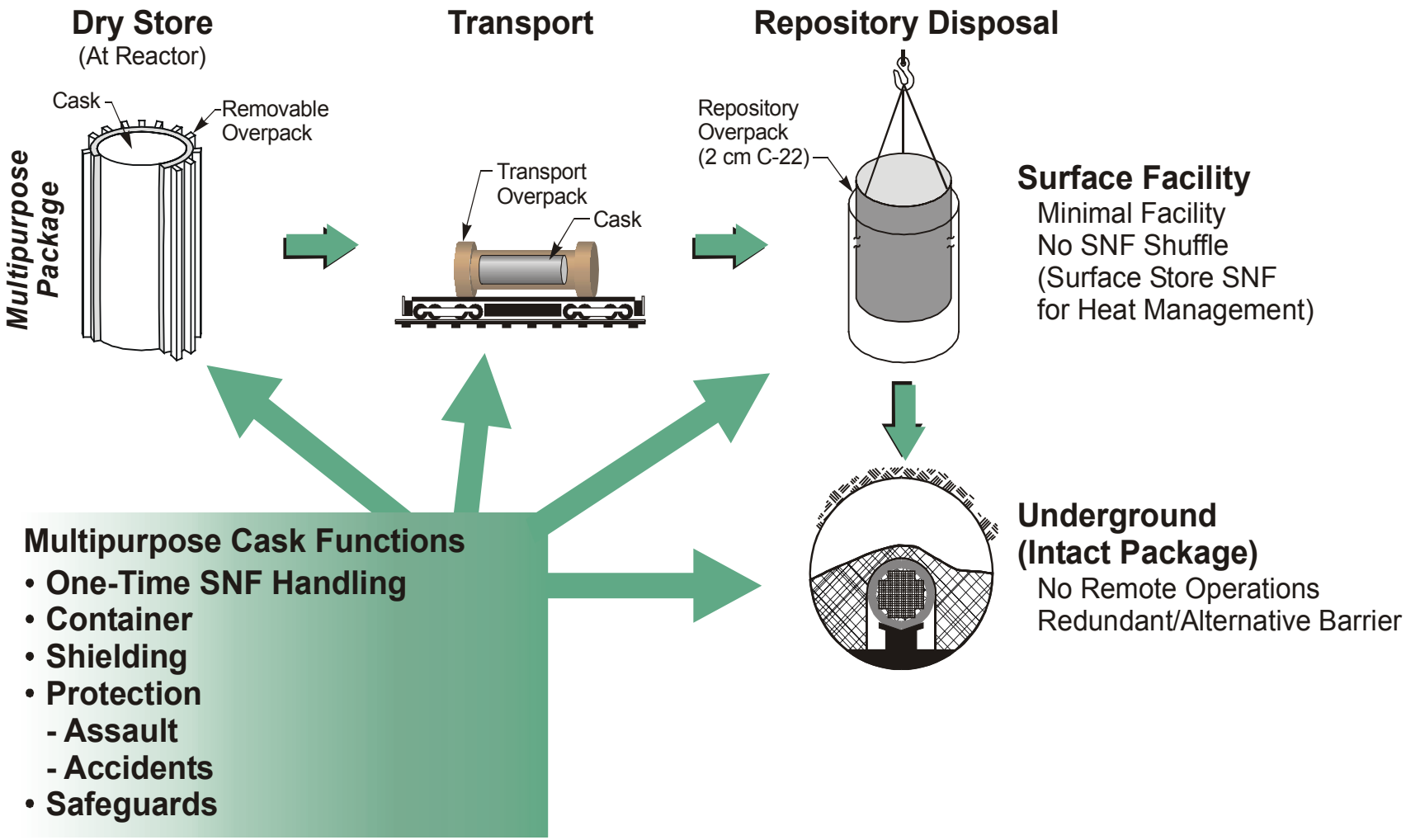

Overpacks Address Conflicting Storage, Transport, and Disposal Requirements of Multipurpose Casks

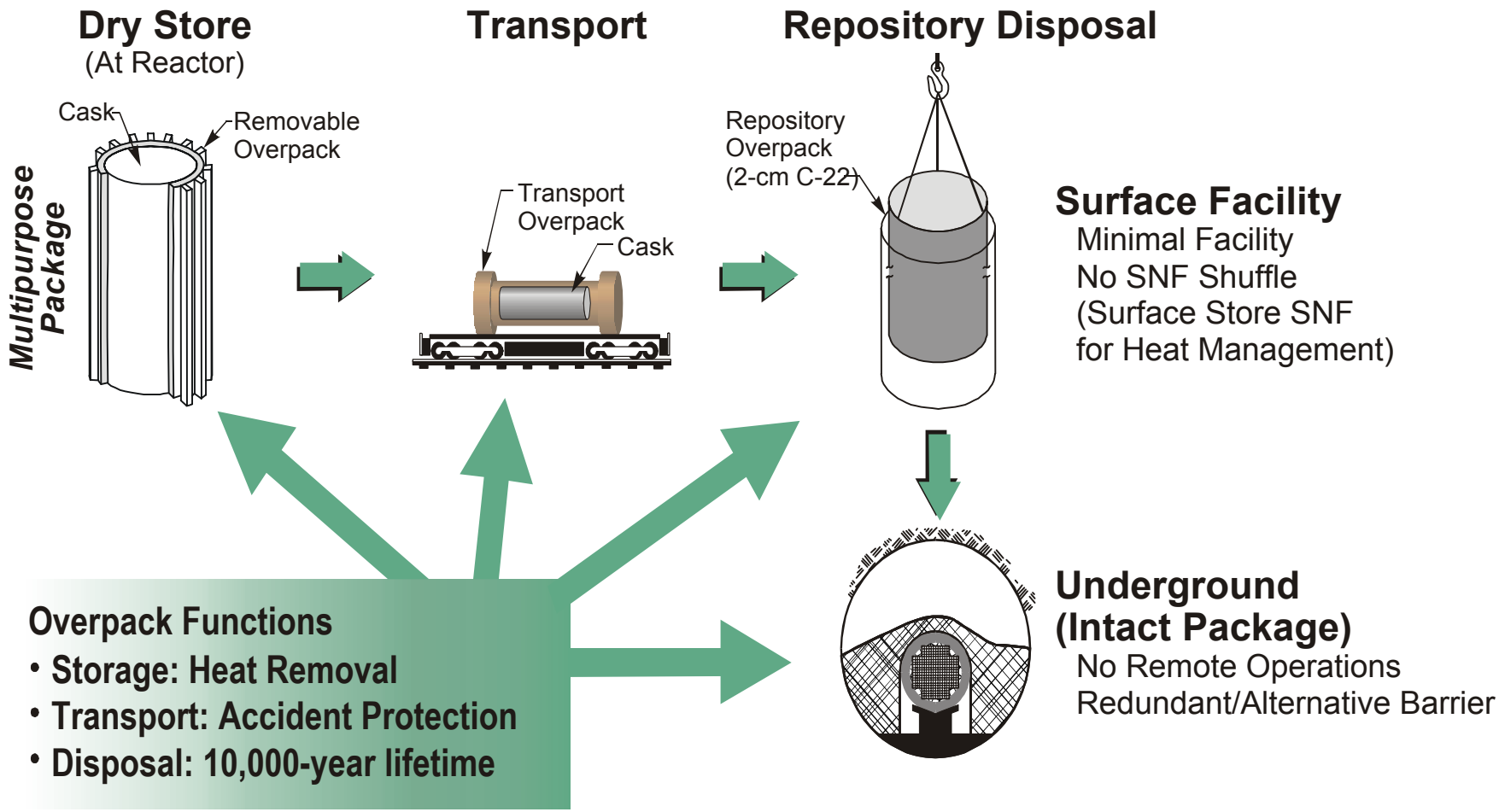

Strategy Minimizes SNF Pool Storage

(Security Concerns: Drainage of Water with Fire and Low-Security Buildings over Pools)

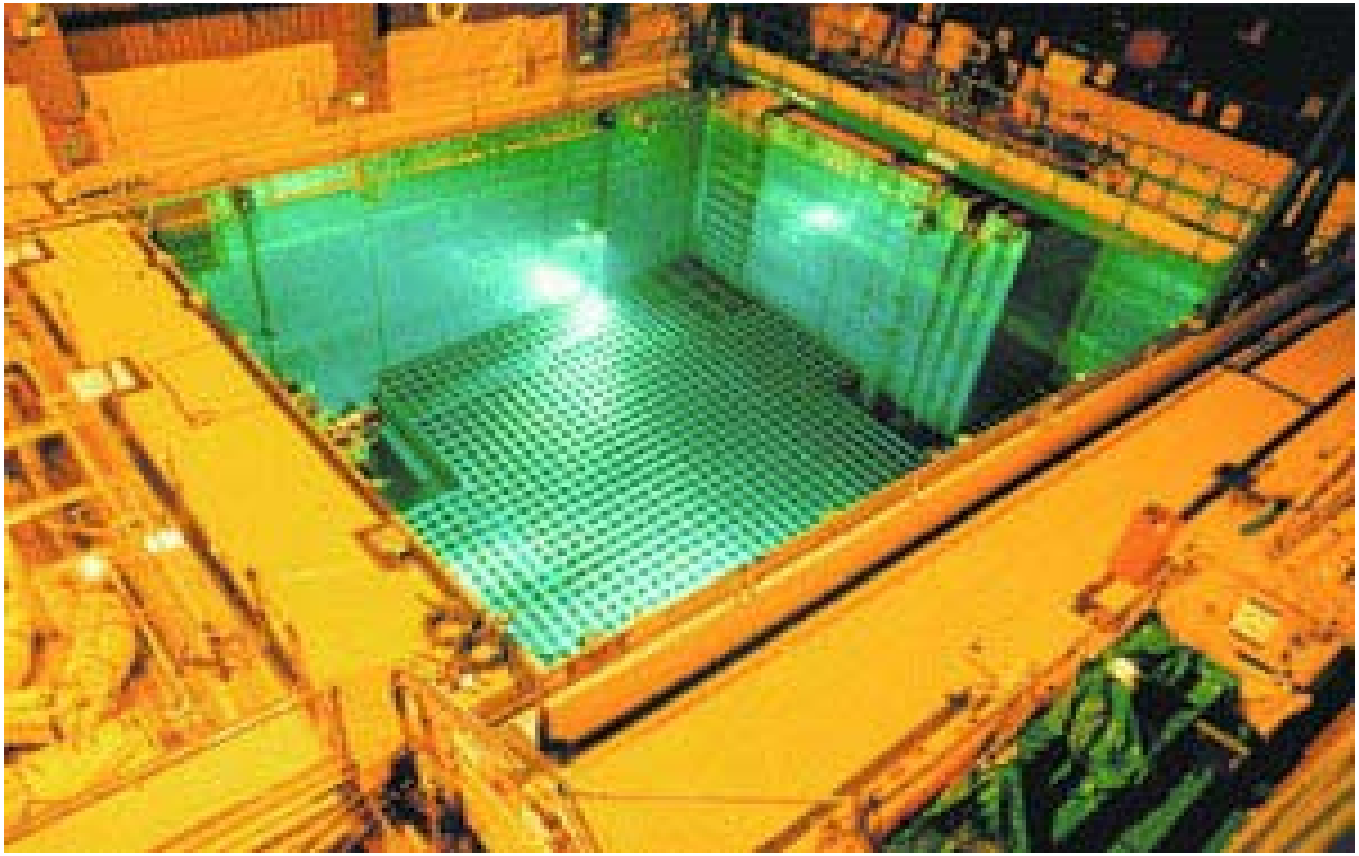

In Severe Environments, Casks Have Potential Advantages over Pools and Other SNF Storage Methods

(Casks Used to Meet German Aircraft Collision Resistance Requirements)

Limited Inventory (Limited Consequences)

Impact Resistance
- Thick Walls
- Cask Recoil

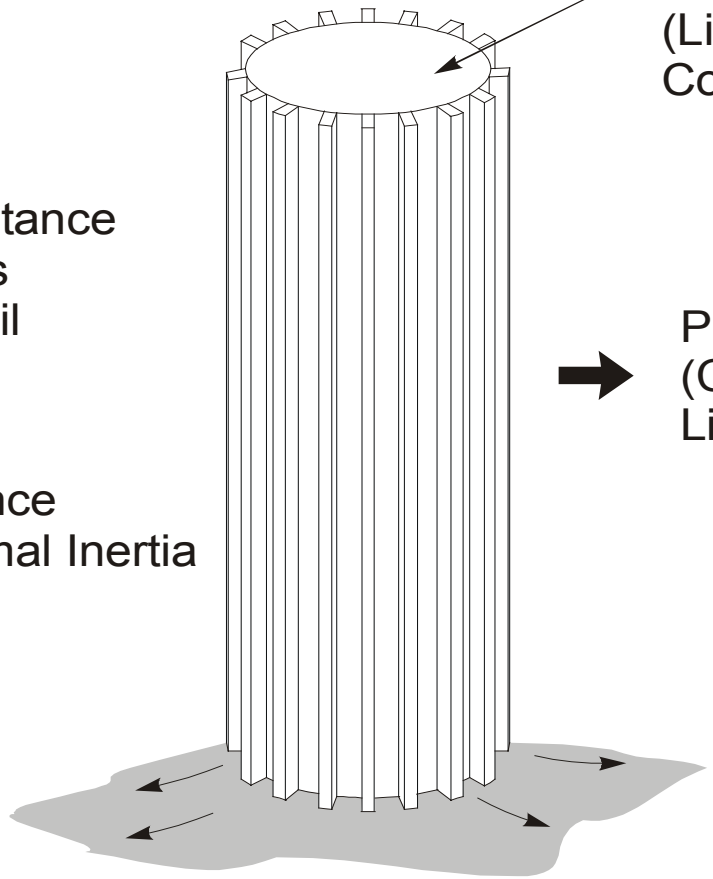

Passive Cooling (Consequence of Limited Inventory)

Fire Resistance
- High Thermal Inertia
- Drain Fuel

German Rail Gun for Testing Casks: 1-ton Projectile at 300 m/s (Simulate Aircraft Jet-Engine Rotor)

The Characteristics of Multipurpose Casks Provide Protection Against Theft or Diversion

Fuel Assembly

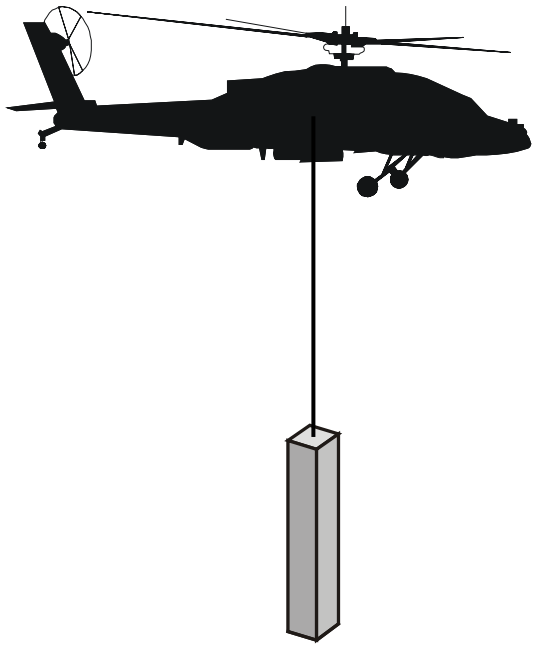

Low weight (~1/2 ton), small size

Multipurpose Cask

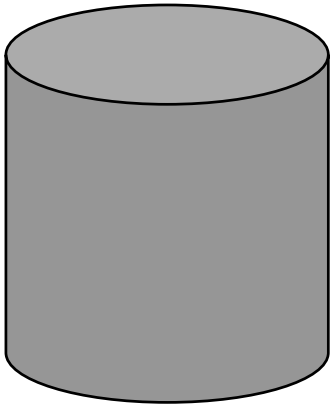

Large weight (>70 tons), large size, detectable from from orbit, option of transponder

Super Cask

Cermets (Ceramics in Metal Matrix) Are the Enabling Technology for a High-Performance Super Cask

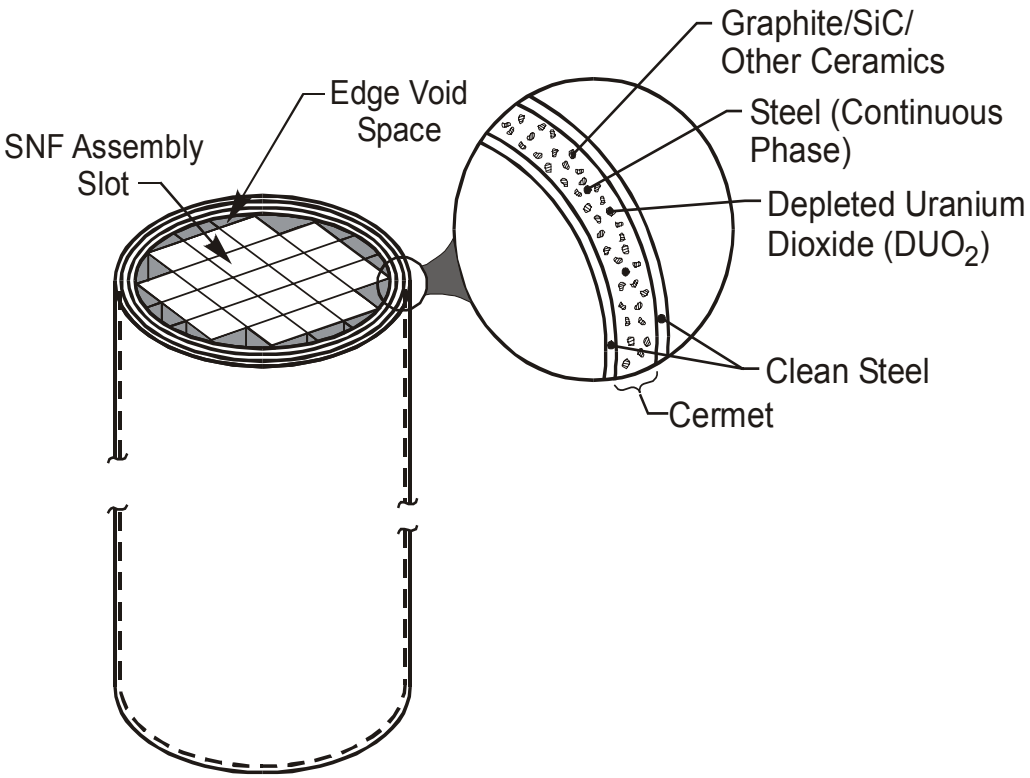

Functions

- Radiation Shielding
  - Gamma: High-Density DUO_2/Other
  - Neutron Moderation/Absorption
    - Oxygen in DUO_2
    - Carbon in SiC and Graphite
- Assault Protection: Multilayer Cermet (Traditional Armor)
  - Ceramic (Al_2O_3, DUO_2, SiC, Other)
  - Metal
- Safeguards and Theft
  - Large Mass
  - Vault Construction: Multilayer Cermet
- Decay Heat Removal
  - High Conductivity Steel Matrix

The Composition Across the Cermet Can Be Varied to Maximize Performance

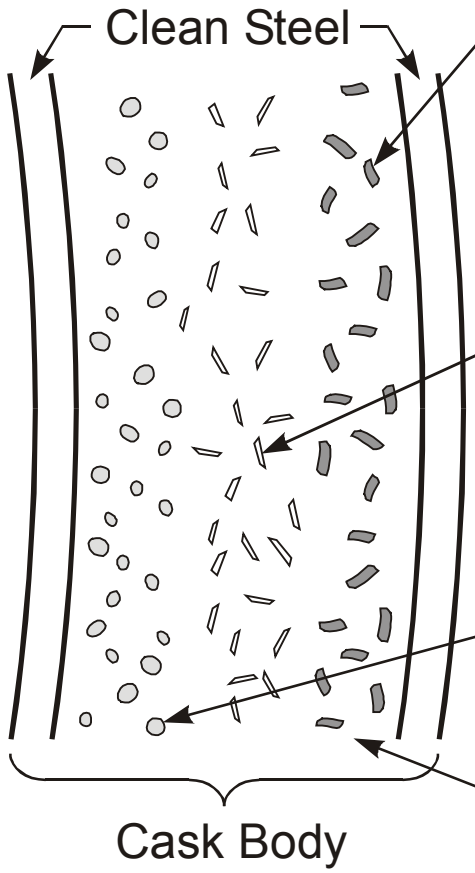

Ceramics for Armor Protection (Traditional Cermet Application)
- DUO_2
- Al_2O_3
- SiC

Ceramics for Neutron Moderation or Absorption
- DUO_2
- SiC
- Gd_2O_3

Ceramics for Gamma Shielding
- DUO_2

Metal Matrix
- Strength
- Thermal Conductivity

DUO_2–Steel Cermets Are Excellent Shielding Materials That Maximize Cask Capacity
(Capacity Strongly Impacts Economic Viability)

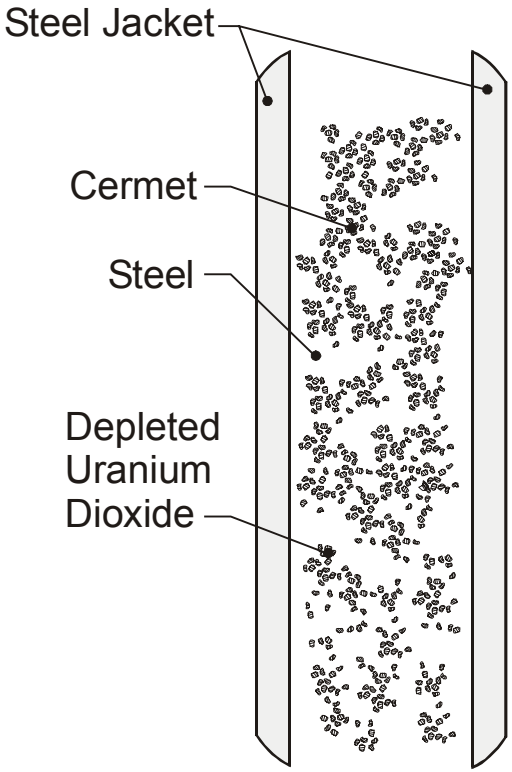

- Gamma Shielding Better Than Steel
  - Steel: 7.86 g/cm^3
  - DUO_2: 10.9 g/cm^3
- Neutron Shielding
  - High-density oxygen (DUO_2) moderator
  - Other neutron absorbers can be added
- Good Physical Properties
  - High thermal conductivity
  - No organics (no fire; acceptable to repository)

DUO_2 Cermets Are Superior Shielding Materials
(Source Term From 21-PWR Yucca Mountain Waste Package)

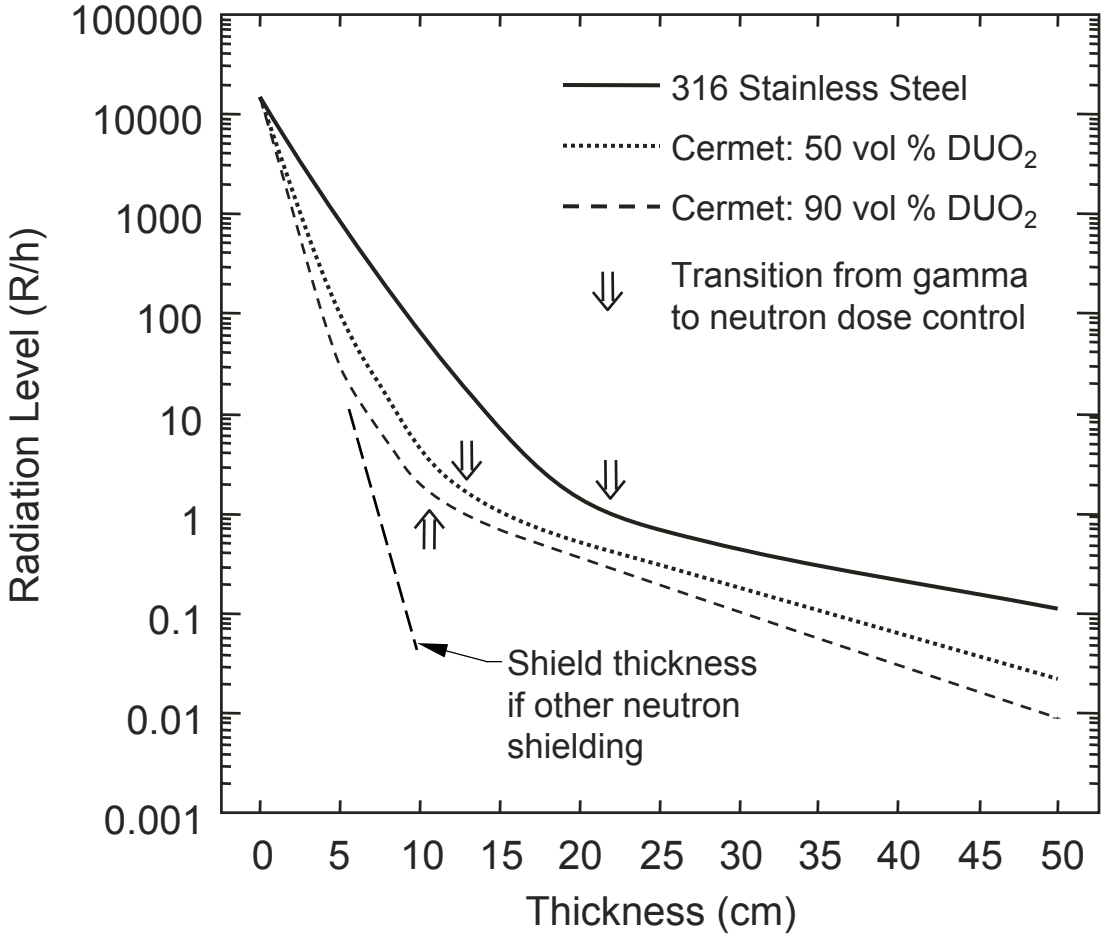

Conclusions

- Protection of SNF is enhanced by
  - Reduced operations
  - SNF placement in strong casks
- Multipurpose cask minimizes handling
- Cermet casks maximize resistance against all types of adverse events
- The once-through fuel cycle should be reexamined in light of new technologies and changing conditions

Backup Viewgraphs

Multipurpose Casks Are Becoming A Credible Option for Several Reasons

- Progress on the Yucca Mountain Project is defining the repository requirements for the cask
- Increases in safeguards and security costs are creating an interest in alternatives
- Merging of electric utilities implies that only a few utilities must agree to such a system before is becomes viable
- New materials technologies are emerging

DUO_2–Steel Cermet Multipurpose Casks Are Being Investigated for Beneficial Use of Depleted Uranium

Cermet

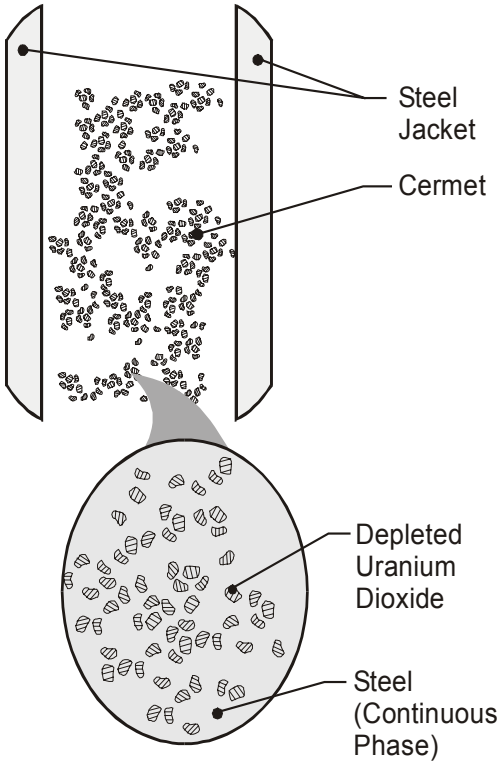

Applications

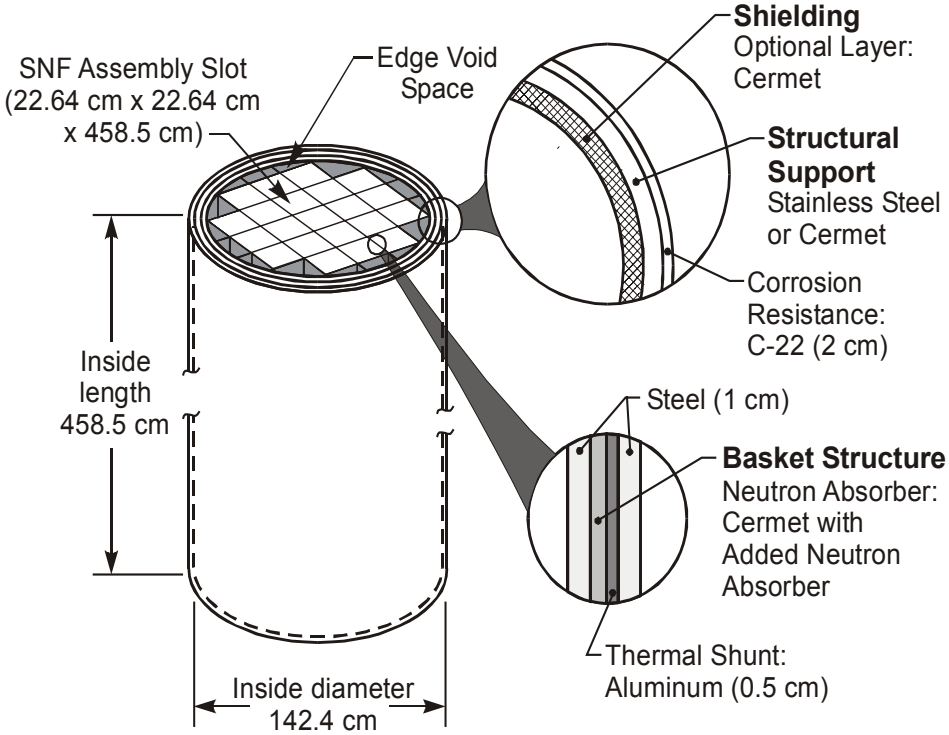

Multipurpose Casks May Significantly Reduce Repository Surface Operations, Risks, and Costs

(Meet Waste Package Decay Heat Limits by Storage, Not Sorting of SNF)

Current System

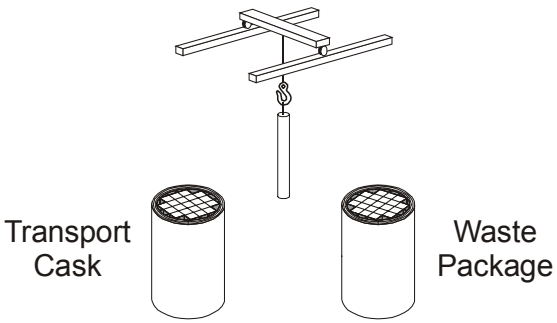

Remote Transfer of SNF

Adjusting Waste Package Heat Load for the Repository

Multipurpose Cask System

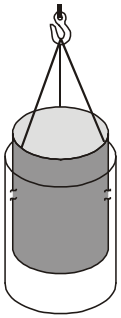

Addition of Overpack

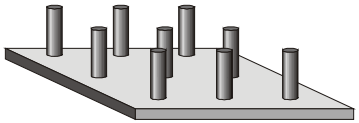

Surface Storage Until Repository Acceptable Heat Load

Cermet Benefit: Cermet Casks May Enhance Protection Against Assault

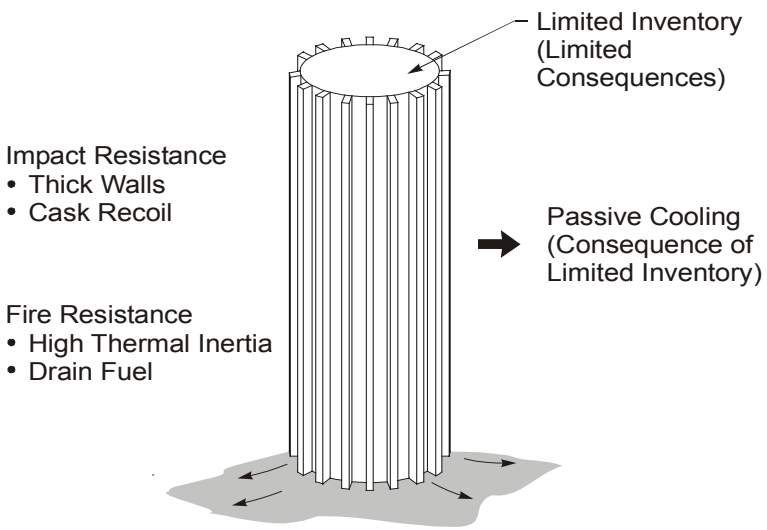

- **Hard/soft layers are used in bank vaults and tank armor**
- **Non uranium cermets are used in tank armor**
- **Cermet properties harden casks against assault**
  - **DUO_2 hard layer**
  - **Soft ductile steel layer**
- **Design trade-offs are not well understood**