Nuclear Hydrogen Production Requirements And Reactor Options

Dr. Charles Forsberg
Oak Ridge National Laboratory
P.O. Box 2008; Oak Ridge, TN 37831-6179
Tel: (865) 574-6783; E-mail: forsbergcw@ornl.gov

Technical Presentation
Idaho National Engineering and Environmental Laboratory
Idaho Falls, Idaho
Thursday, September 12, 2002

The submitted manuscript has been authored by a contractor of the U.S. Government under contract DE-AC05-00OR22725. Accordingly, the U.S. Government retains a nonexclusive, royalty-free license to publish or reproduce the published form of this contribution, or allow others to do so, for U.S. Government purposes. File name: Hydrogen.INEEL.2002

Outline

- Hydrogen (H_2) Demand
- Generation of H_2 Using Nuclear Energy
- Reactor Options
- Conclusions

Hydrogen Demand Is Large and Growing Rapidly

- World consumes 50 million tons of H_2/year
  - ~80% intentionally produced; remainder, by-product H_2
  - 200 GW(th) if the H_2 is burned
  - 4 to 10% growth per year
  - Applications: fertilizer, chemical industry, liquid fuels
- Within decades, the energy to produce H_2 in the U.S. may exceed current energy production from nuclear power

Liquid Fuels Production Is Rapidly Becoming the Major Market for Hydrogen

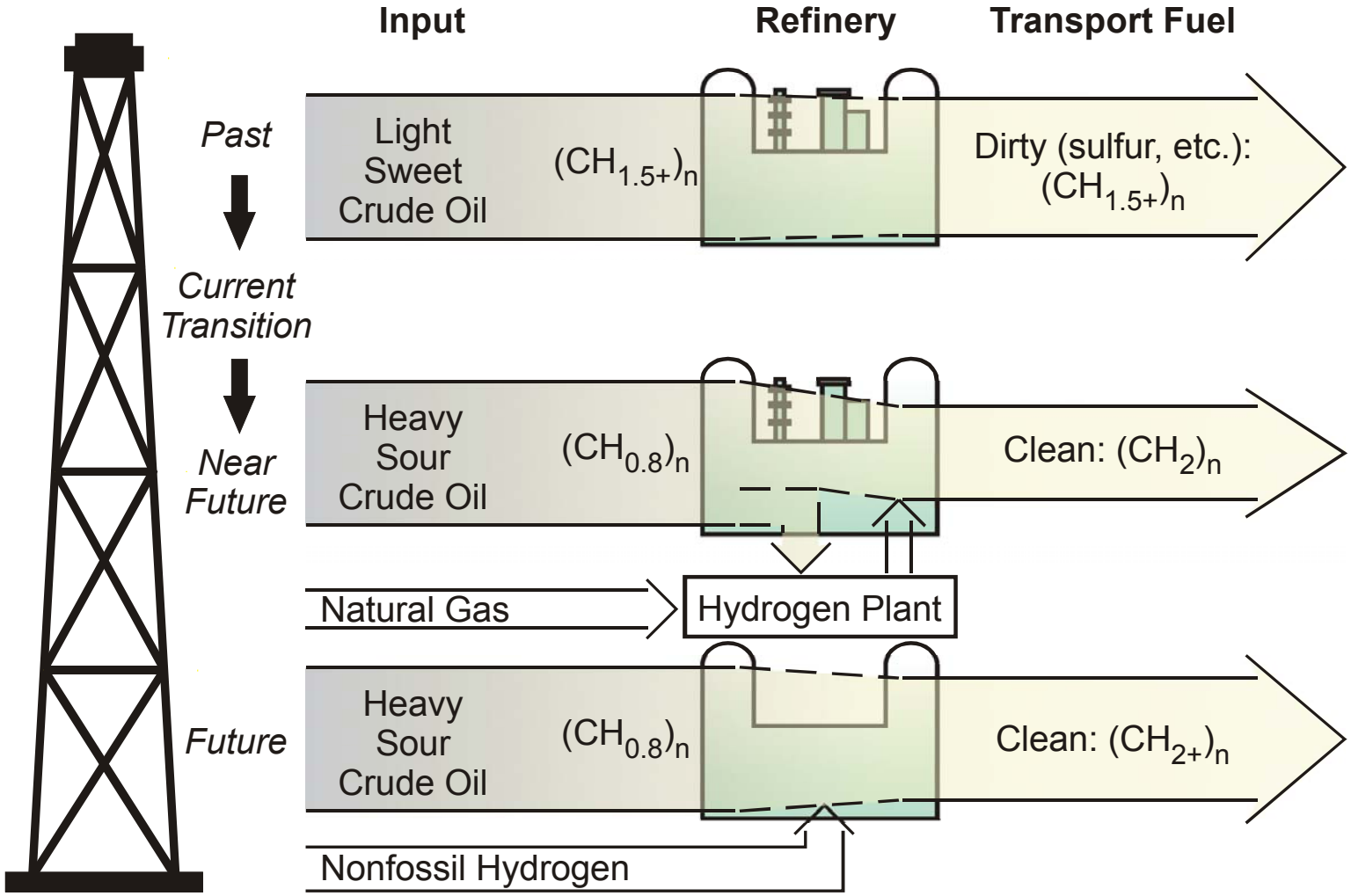

The Growing Hydrogen Demand Creates a Bridge to the Hydrogen Economy—With a Future Hydrogen Energy Demand That May Exceed That for Electricity

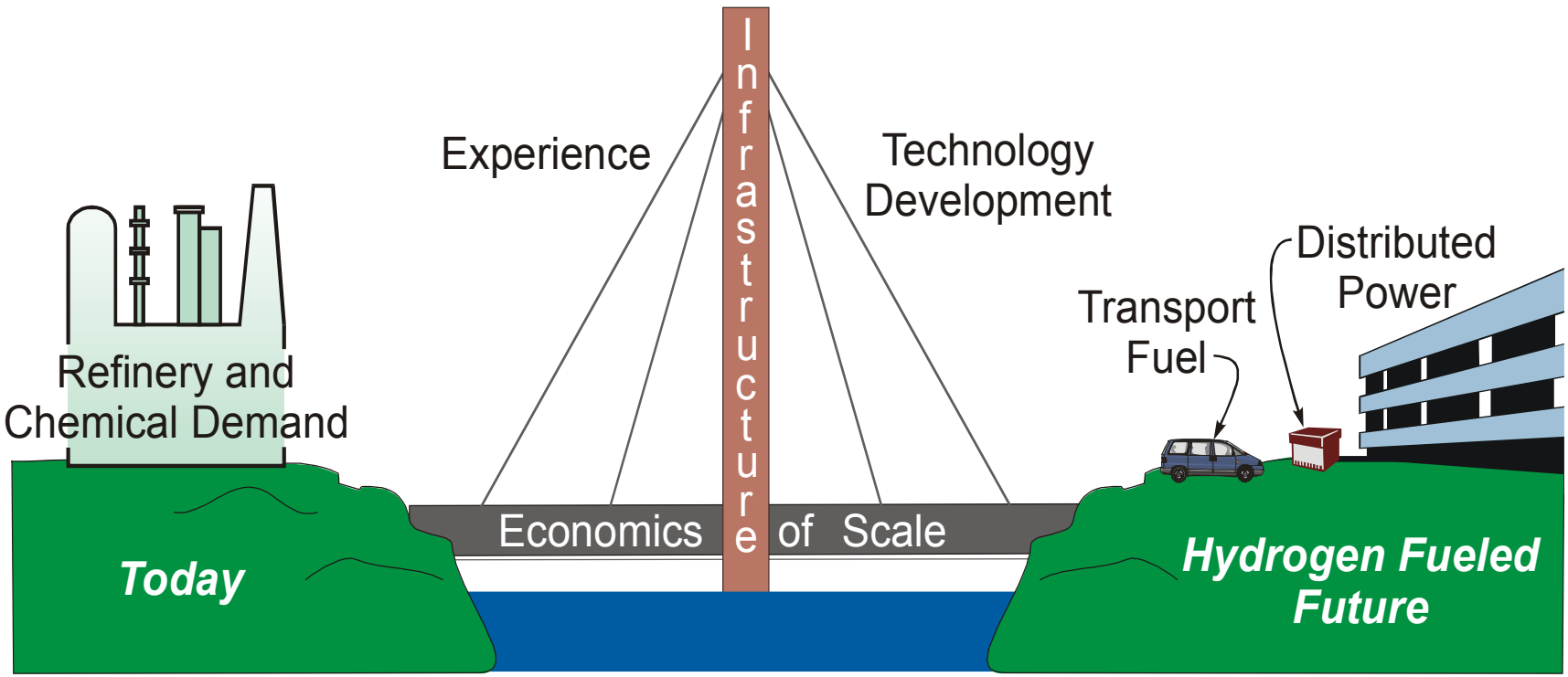

Hydrogen Could Exceed Electricity As An Energy Carrier By 2050

- Auto companies and Presidential initiate to develop fuel cells for cars within 10 y
- Technological transitions typically take several decades
  - 40 years from whale oil lamps to electricity
  - 30 years from horses to cars
- If H_2 replaces liquid fuels, H_2 demand may exceed electricity demand
  - Y in energy projections
  - One future: electricity, other future H_2 and electricity
  - No solid basis to predict which future will occur

Scale of Hydrogen Production Matches Nuclear Energy

- The economics of nuclear reactors implies energy outputs of 600 to 4500 MW(th)
- Newest world-class H_2 plants (natural gas fuel) under construction will produce 300 million ft^3/day
- Equivalent to 2400 MW(th) reactor (Assuming 50% thermal to H_2 conversion efficiency)
- No size mismatch

The Intrinsic Characteristics of Nuclear Power Are Compatible with Hydrogen Production

(Remote Siting, Scale of Operations, and Full-Load Operations)

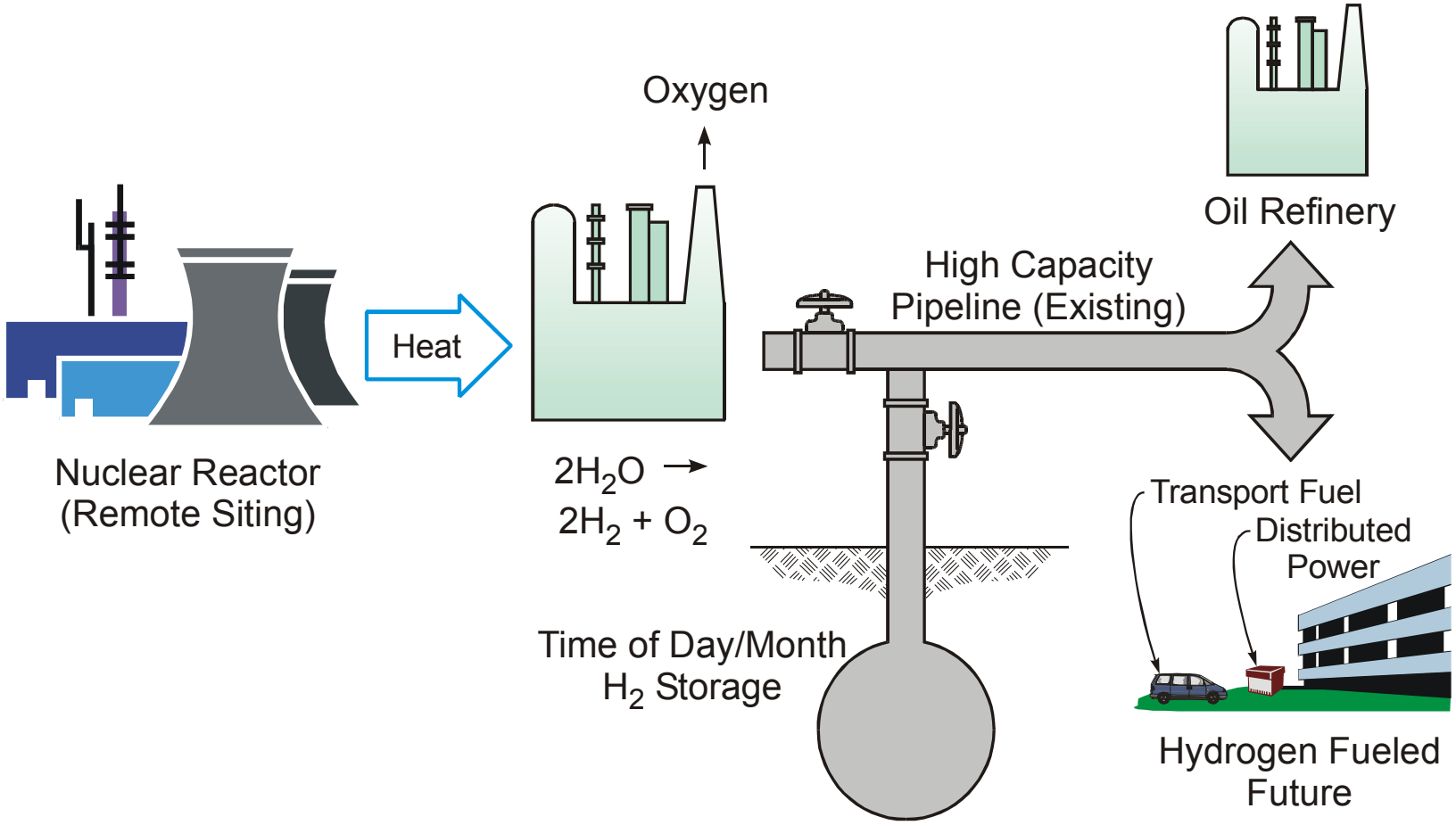

Generation of Hydrogen Using Nuclear Energy

Several Technologies Available To Produce Hydrogen Using Nuclear Energy—All Impose Serious Requirements on the Reactor

Characteristics of Current Hydrogen Production Techniques

- Most H_2 is made from natural gas
  - Heat + methane (CH_4) + water (H_2O) $\Rightarrow$ hydrogen (H_2) + carbon dioxide (CO_2)
  - Endothermic process with heat input to 900°C
- Water electrolysis is used to produce small quantities of H_2
  - Inefficient: heat to electricity to chemical energy (H_2)
  - Viable where electricity is cheap (night time)

Hydrogen from Steam Reforming

- Heat + methane (CH_4) + water (H_2O) $\Rightarrow$ hydrogen (H_2) + carbon dioxide (CO_2)
- Endothermic process
  - Natural gas option (current practice) uses CH_4 to provide heat (combustion) and reduced H_2
  - Nuclear option (future) replaces some of the natural-gas heat source but not the reduced H_2 from CH_4
- Heat input to 900°C

Nuclear-Assisted Hydrogen Production Uses High Temperature Heat (to 900°C) To Reduce Energy Requirements For Steam Reforming of Natural Gas

(Development Program in Japan)

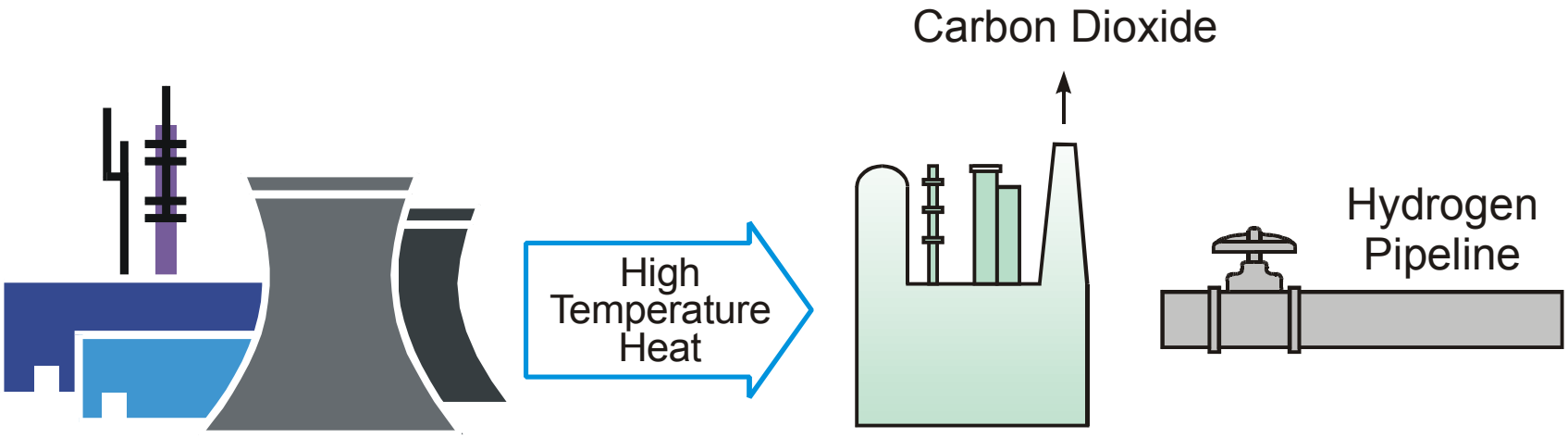

$$CH_4 + 2H_2O \rightarrow CO_2 + 4H_4$$

Hydrogen from Hot Electrolysis

- Heat + water (H_2O) + electricity $\Rightarrow$ hydrogen (H_2) + oxygen (O_2)
- Heat replaces some of the electric demand
- Heat input at 700 to 900°C
- High temperature operation may also reduce other losses in the electrolysis process

Hydrogen Production Using Hot Electrolysis Requires High-Temperature Heat (700-900°C) and Electricity

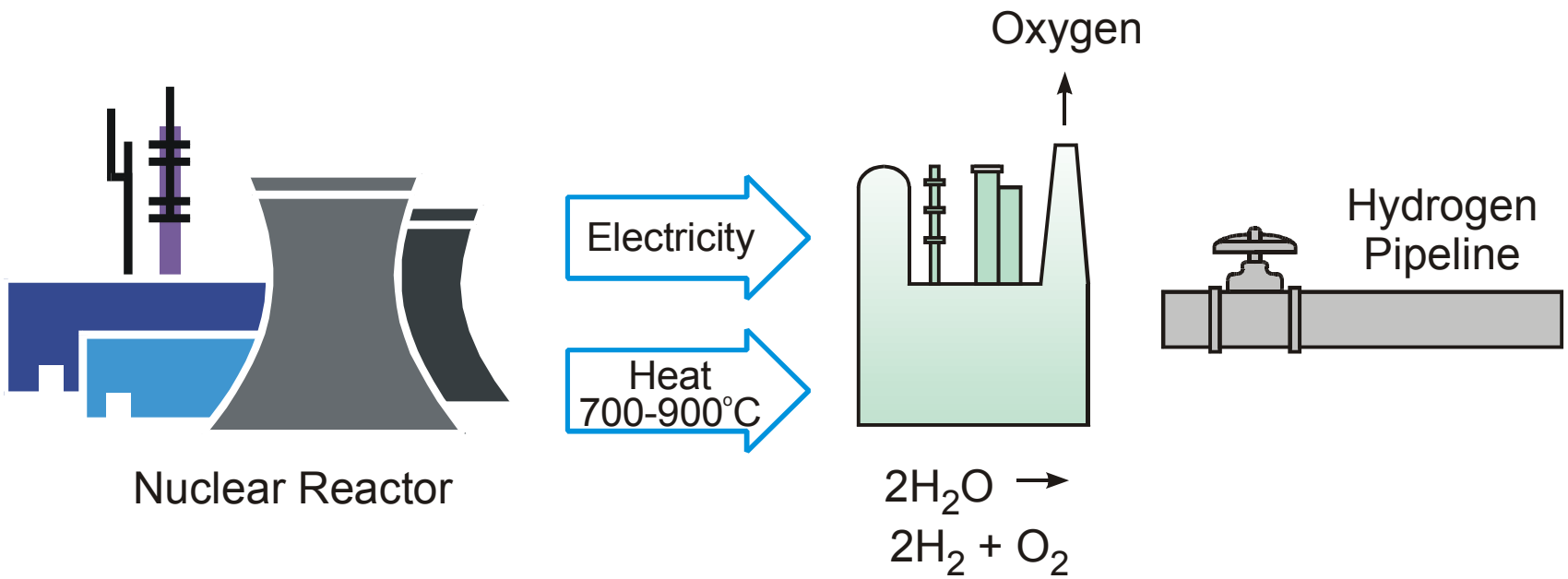

Thermochemical Production of H_2 Is The Leading Technology

- Heat + water $\Rightarrow$ hydrogen (H_2) + oxygen (O_2)
- Heat input >750°C
- Low pressure
  - Drive chemical reactions
  - Minimize materials requirements
- Lowest potential costs
  - Projected efficiencies of >50%
  - Projected best long-term economics (60% of cold electrolysis)

Thermochemical Processes Convert High-Temperature Heat and Water to H_2 and Oxygen

(Example [leading candidate]: Iodine–Sulfur Process)

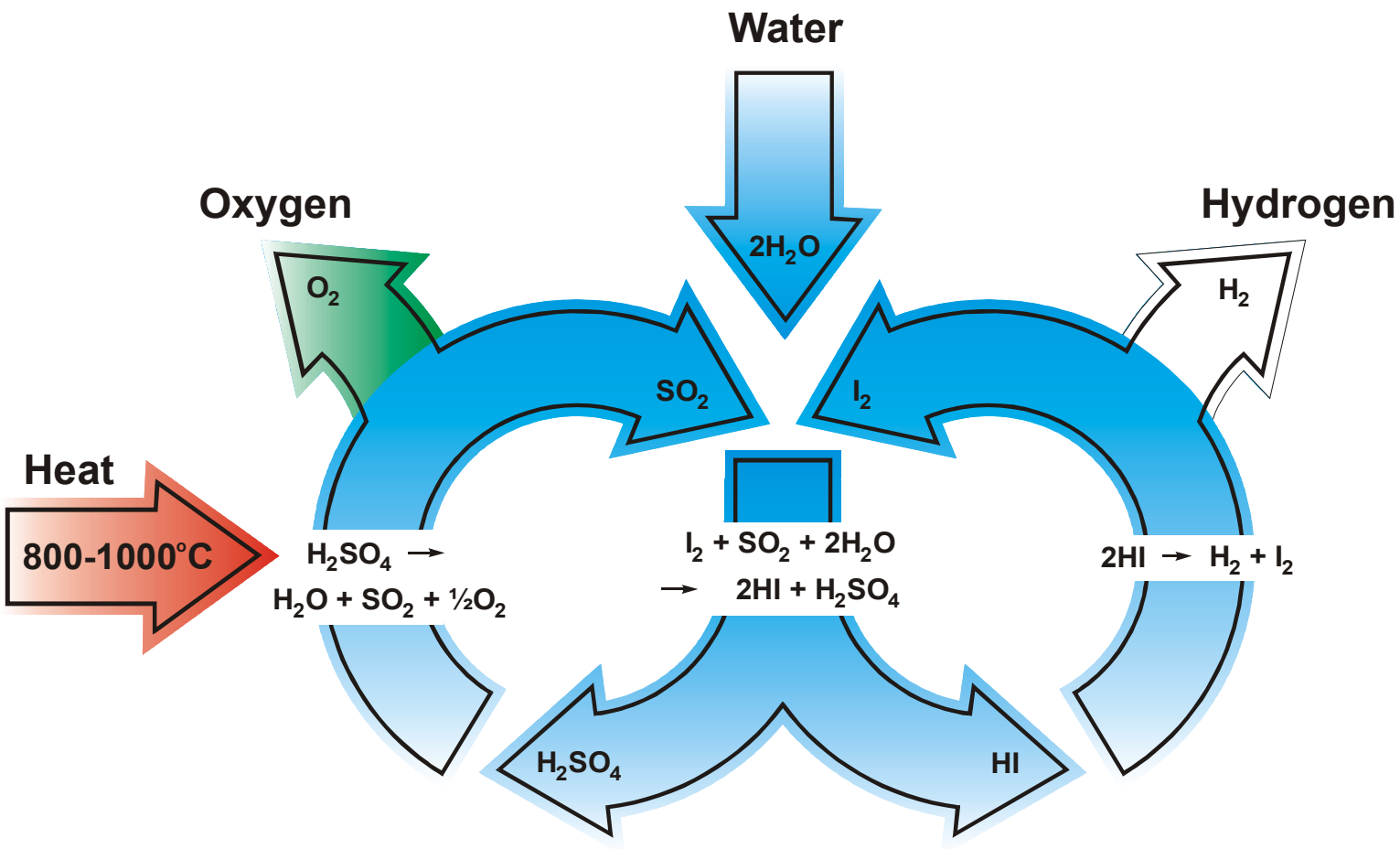

High-Temperature, Low-Pressure Heat Required For Nuclear Hydrogen Production

Production Method	Temperature (°C)
Hot Electrolysis	700-900
Assisted Steam Reforming	To 900
Thermochemical	>750

Low-Pressure Operation Is Preferred

- Low pressures for H_2 production (thermodynamic equilibrium limits)
  - Gas volume increases with chemical reactions
  - Low pressure to maximize yield
- Minimize stress on high-temperature components
- Maximize safety
  - Hydrogen may not be the primary hazard
  - Other hazardous chemicals

Hydrogen Production Requirements

- Large production capacity (economics)
- High temperatures (process requirement)
- Avoidance of tritium in product (acceptance)
- Separation of hydrogen production system from the reactor (safety)
- Low pressure to hydrogen production facility (safety)

Reactor Options

Candidate High-Temperature Reactors for Hydrogen Production

- High-Temperature Gas-Cooled Reactor (HTGR and VHTR)
  - Graphite-matrix, coated-particle fuel
  - Helium coolant
- Advanced High-Temperature Reactor (AHTR)
  - Coated-particle fuel similar to HTGR fuel
  - Liquid molten-salt coolant
- Molten Salt Reactor (MSR)
  - Combined liquid molten-salt fuel and coolant

Hydrogen Production Requires High Temperatures: Only Graphite–Core Reactors Clearly Meet Requirements

	Liquid Fueled	Solid Fueled
Gas Coolant		VHTR
Liquid Coolant	MSR	AHTR

Advanced High-Temperature Reactor

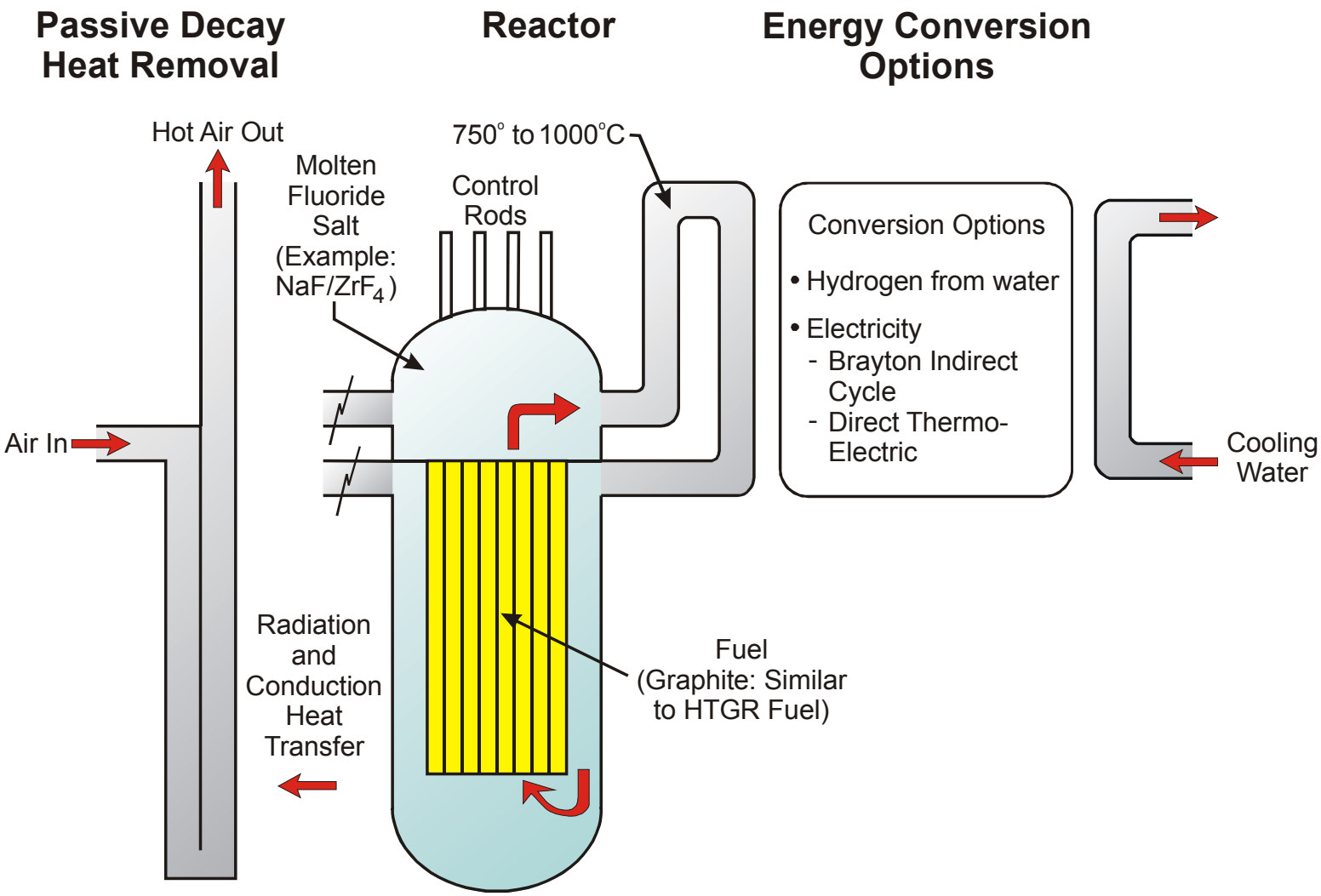

The Advanced High Temperature Reactor (AHTR) Uses a Molten Salt Coolant and a Graphite-Matrix Coated-Particle (HTGR) Fuel

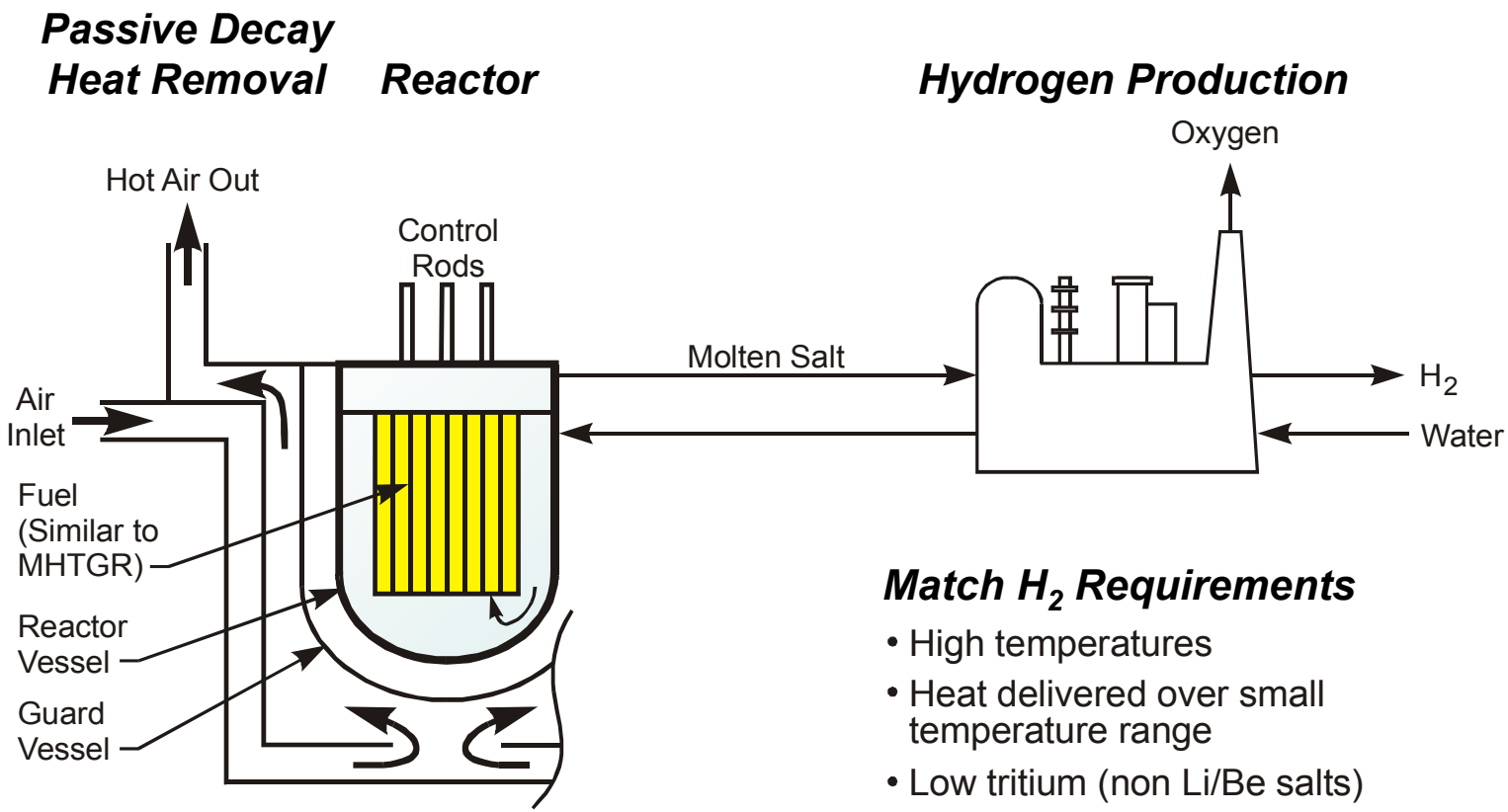

Match H_2 Requirements

- High temperatures
- Heat delivered over small temperature range
- Low tritium (non Li/Be salts)
- Low pressure (< 0.1 psia)

The AHTR Combines Two Technologies To Produce High-Temperature Heat

- **Coated-particle, graphite-matrix fuel**
  - Demonstrated temperature limit of ~1200ºC
  - Same fuel technology used for high-temperature gas-cooled reactors
  - Compatible with molten fluoride salts
- **Molten fluoride salt coolant (NaF/ZrF_4, etc.)**
  - Very low pressure (boils at ~1400ºC)
  - Efficient heat transfer: Similar to that of water
  - Coolant for proposed fusion energy plants
  - Developed for the Aircraft Nuclear Propulsion Program
    - Aircraft Reactor Experiment operated at 815°C

The AHTR and HTGR Use The Same Graphite-Matrix Coated-Particle Fuel
(Japan HTTR: 950ºC Helium Exit Temperatures)

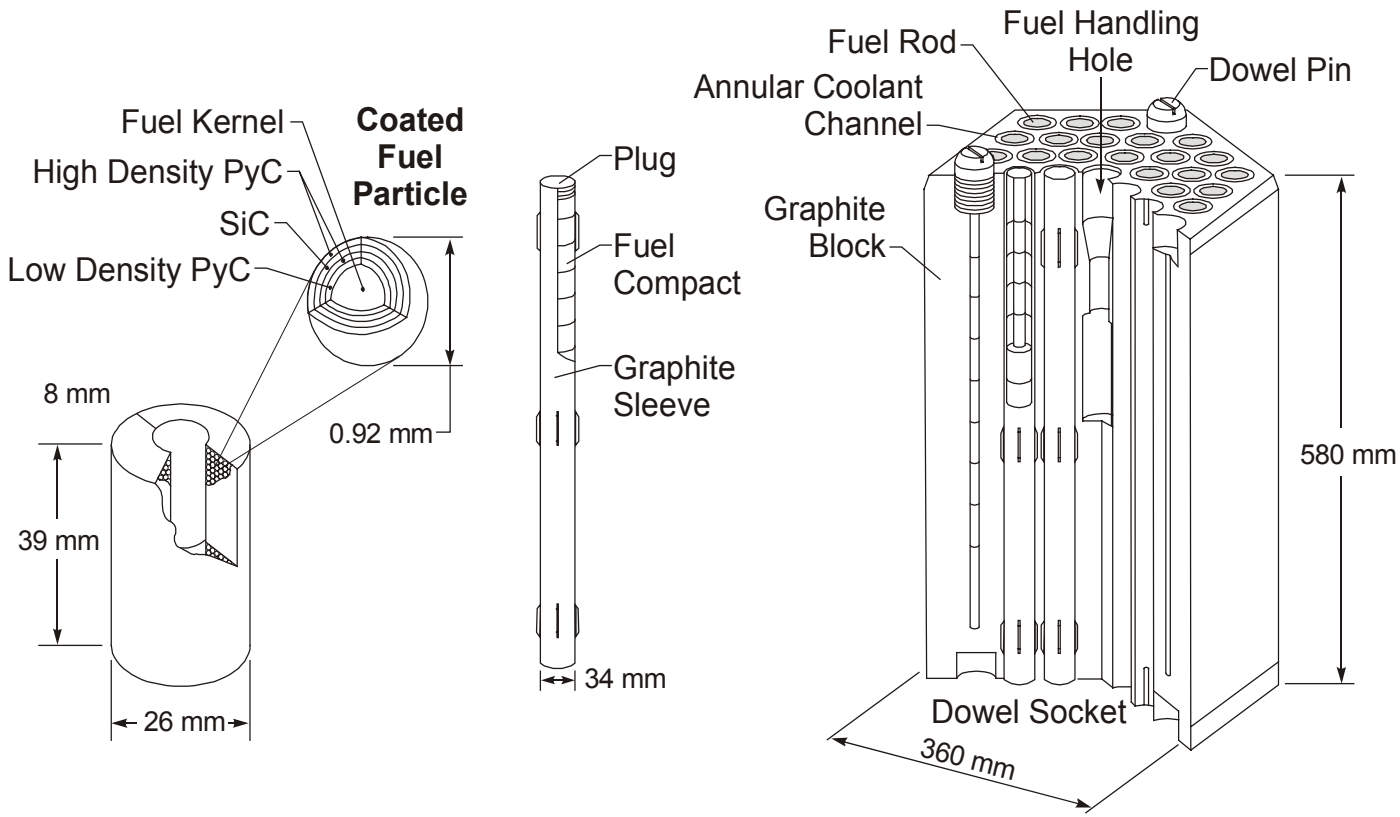

Fuel Compact **Fuel Rod** **Fuel Block**

The Molten Salt Reactor (MSR) Has Molten-Salt Fuel and a Graphite Moderator

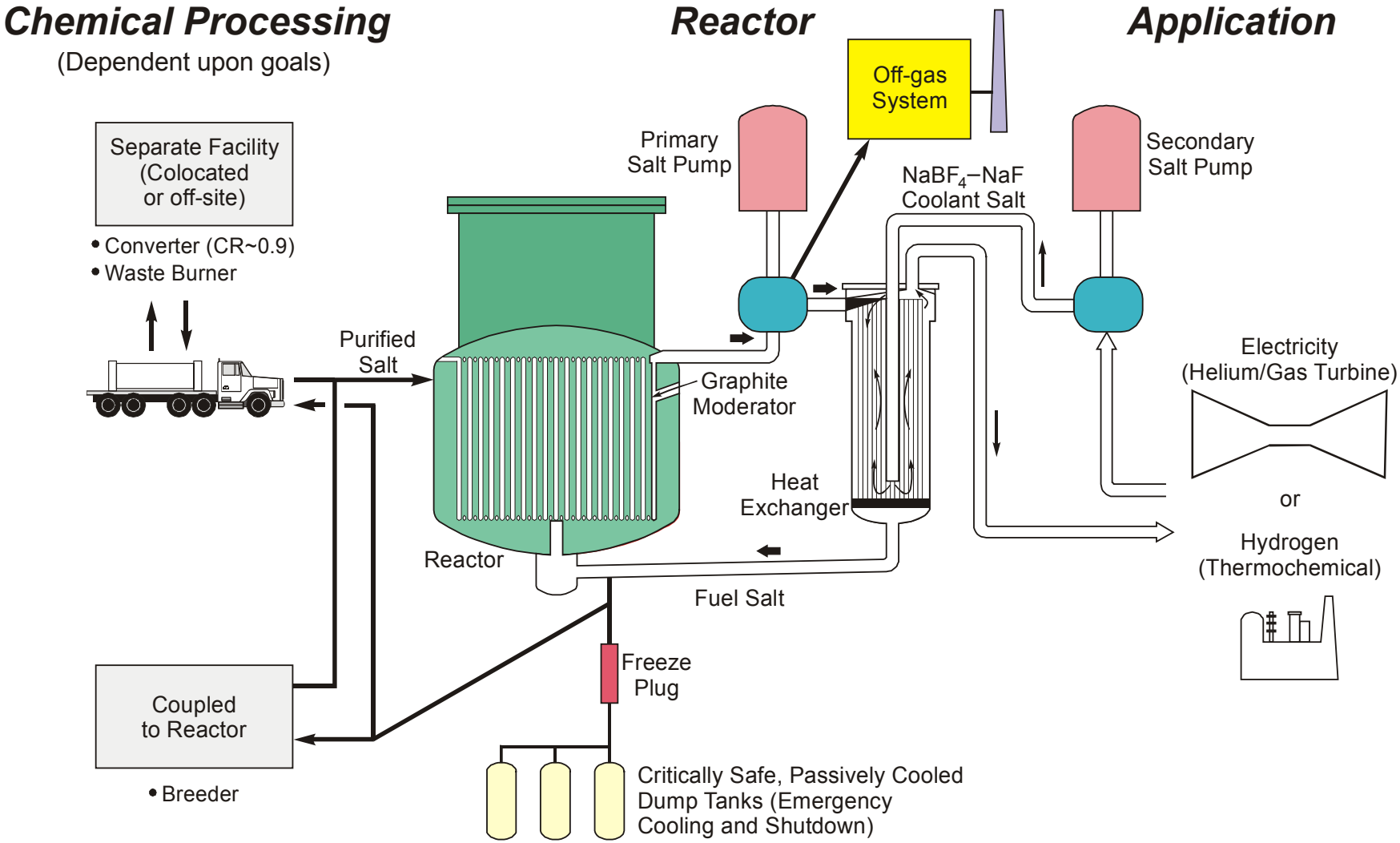

Boiling Points of Alternative Reactor Coolants
(Molten Salts Allow Low-Pressure, High-Temperature Operations)

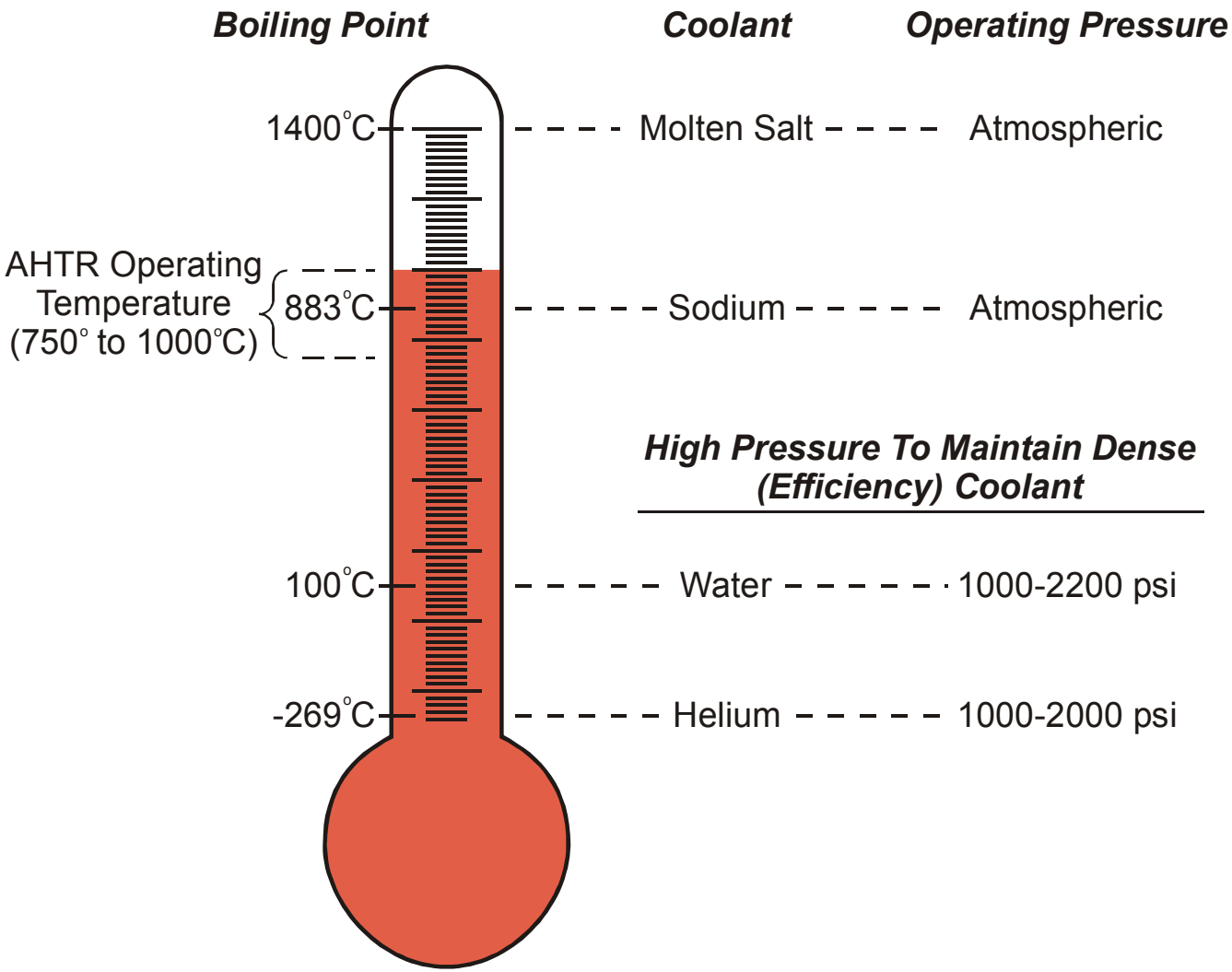

AHTR and MSR Molten Salt Coolants Allow All the Heat To Be Delivered at High Temperatures

(Matches Requirements for Hydrogen Production While Minimizing the Reactor Core and Heat-Exchanger Temperatures)

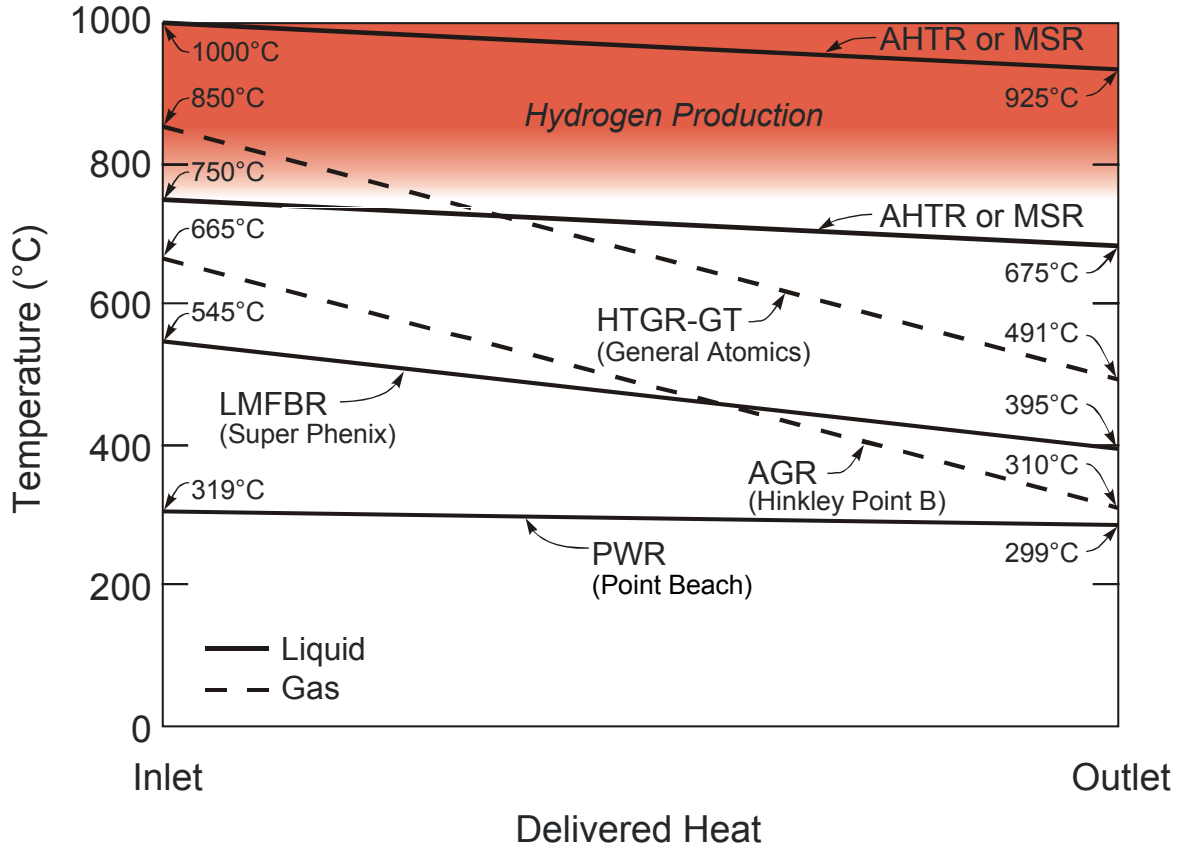

Mobility of Tritium May Impact Reactor Choice

Reactor	Coolant	Fuel (Tertiary Fission)
VHTR	^{3}He ($n \rightarrow p$)	Solid Fuel
AHTR	None	Solid Fuel
MSR	Liquid Fuel	Liquid Fuel (Higher mobility)

Molten Salts Are a Preferred Interface Fluid Between Nuclear and Chemical Plants

- **Minimize safety and materials issues**
  - Low pressure minimizes stress on high-temperature equipment
  - Low chemical reactivity
- **Low pumping costs**
  - Efficient heat transfer from the reactor
  - Allows large separation between reactor and chemical plant
- **Large experience base**
  - Aluminum industry uses molten fluoride salts in graphite baths to produce aluminum (100+ years of experience)
  - Molten-salts are the preferred high-temperature heat-transfer fluid in the chemical industry

Reactor Characteristics

Reactor	Fuel	Coolant	Power (MWth)	Pres. (Atm)
VHTR	Solid	Helium	600	1000 to 2000
AHTR	Solid	Molten Salt	2000+	<0.1
MSR	Liquid	Molten Salt	2000+	<0.1

Conclusions

- Massive growth in hydrogen demand is expected under any scenario
- Making hydrogen is demanding
- Reactor design should be driven by the H_2 plant requirements
  - Three reactor choices
  - Each has different strengths and weaknesses
- Limited number of reactor candidates that can clearly meet the requirements

Backup Viewgraphs

The Advanced High Temperature Reactor For Hydrogen and Electricity Production Uses A Molten Salt Coolant and Graphite-Matrix Coated-Particle (HTGR) Fuel

Reactor System

Passive Decay Heat Removal *Reactor*

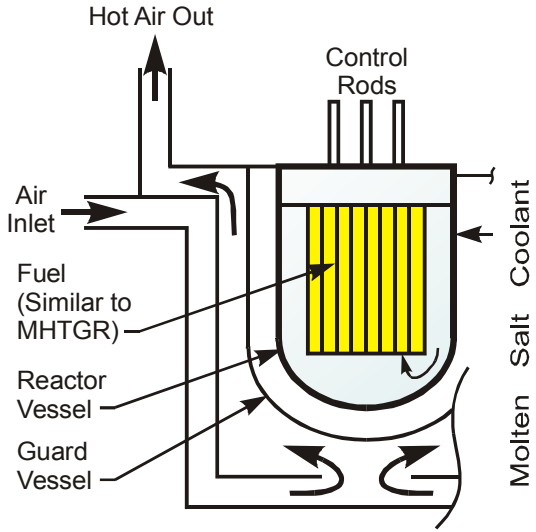

Applications

Hydrogen (Thermochemical)

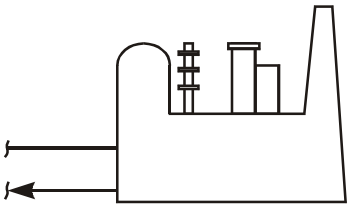

Match H_2 Requirements

- High temperatures
- Heat delivered over small temperature range
- Low tritium (non Li/Be salts)
- Low pressure

Electricity: Multi-Reheat Helium Brayton Cycle

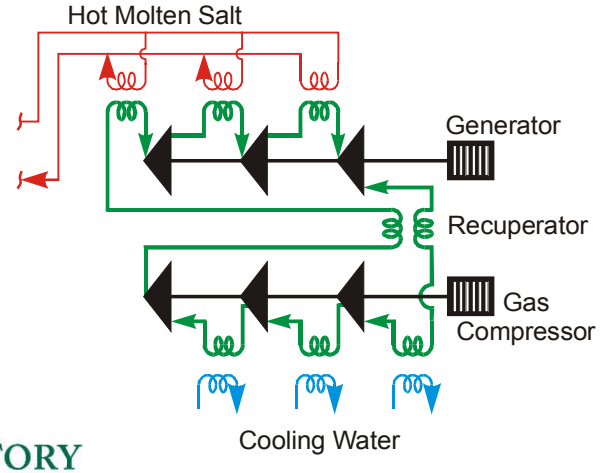

High Efficiency Electricity

- 48% at 750°C
- 56% at 850°C
- 59% at 1000°C

The Safety Case for the AHTR: Accident Control

- Low-pressure (subatmospheric) coolant
  - Escaping pressurized fluids provide a mechanism for radioactivity to escape from a reactor during an accident
  - Low-pressure (<1-atm) salt coolant minimizes accident potential for radioactivity transport to the environment
- Molten salt is a secondary barrier to prevent radionuclide releases to the environment (fission products and actinides dissolved in salt)
- Passive decay-heat-removal systems similar to those of proposed modular liquid-metal reactors

The High-Temperature, Low-Pressure, Liquid Coolant Enables Passive Decay Heat Removal In Large Reactors

(Example: AHTR Using Modular Liquid-Metal Reactor Decay-Heat System)

Passive Decay Heat Removal **Reactor**

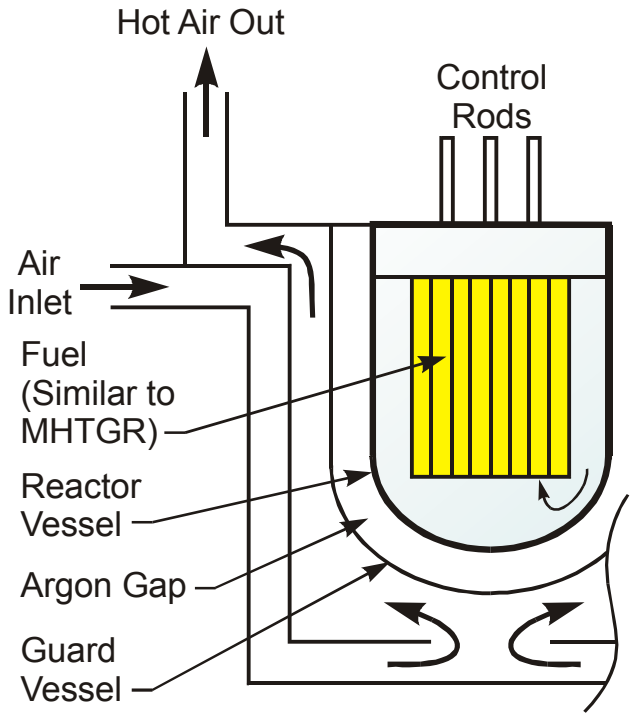

Decay-Heat Cooling System Characteristics

- Similar to GE S-PRISM (LMR)
- Argon Gap
  - Heat Transfer ~T^4
  - Thermal Switch Mechanism
- Heat Rejection Temperature Dependent
  - LMR: 500-550°C (~1000 Mw(th))
  - AHTR: 750-1000°C (>2000 Mw(th))
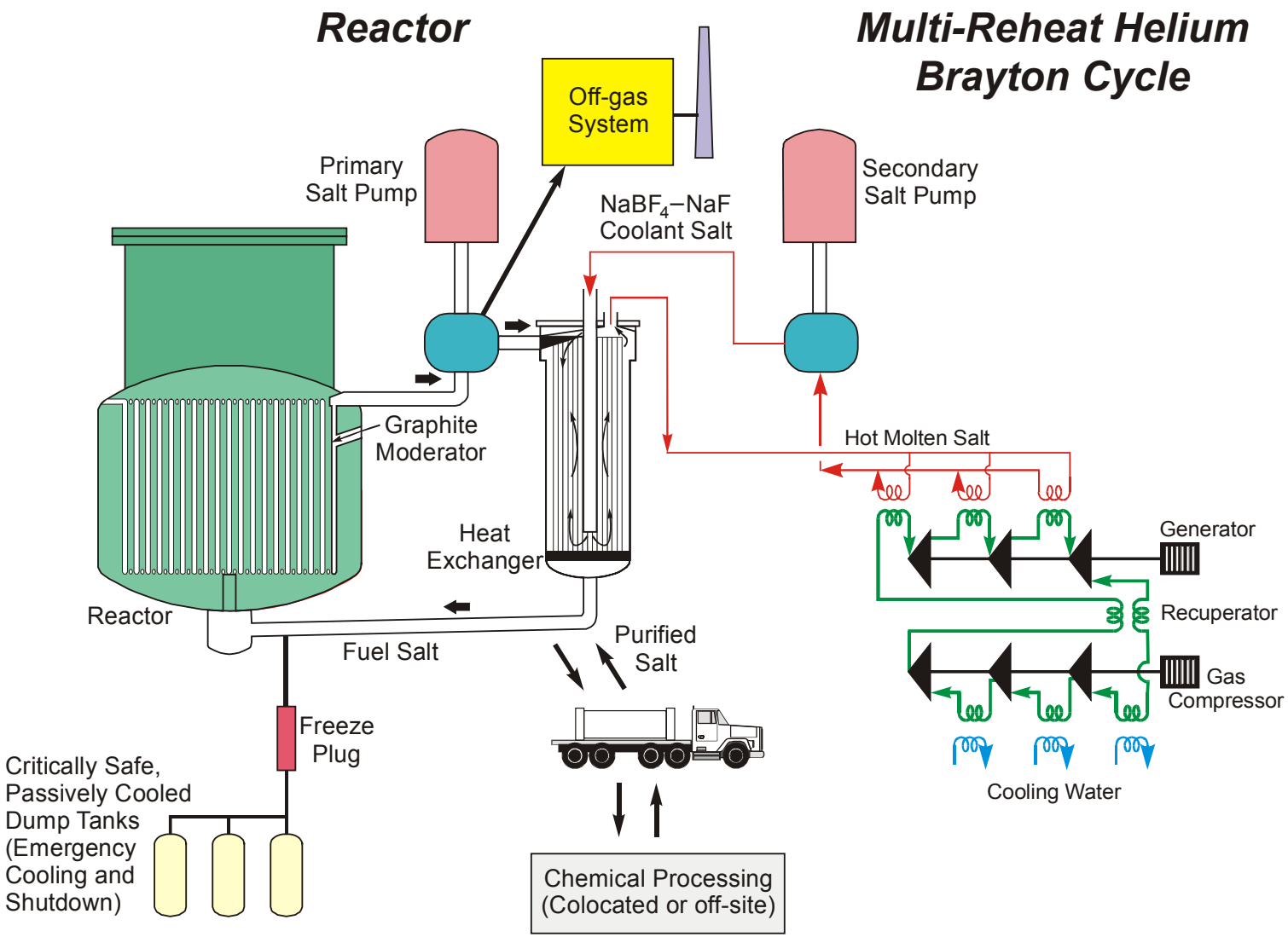
Molten Salt Reactor: Electricity Production