The Advanced High-Temperature Reactor For Hydrogen Production

Dr. Charles Forsberg
Oak Ridge National Laboratory
P.O. Box 2008; Oak Ridge, TN 37831-6179
Tel: (865) 574-6783; E-mail: forsbergcw@ornl.gov

Technical Workshop
Large Scale Production of Hydrogen from Nuclear Power—Fission and Fusion
General Atomics
San Diego, California
Wednesday, May 15, 2002

The submitted manuscript has been authored by a contractor of the U.S. Government under contract DE-AC05-00OR22725. Accordingly, the U.S. Government retains a nonexclusive, royalty-free license to publish or reproduce the published form of this contribution, or allow others to do so, for U.S. Government purposes. File name: AHTR.GA.2002

Outline

- Requirements for hydrogen (H_2) production
- The Advanced High-Temperature Reactor
- Nuclear–H_2 interface issues
- Electricity production
- Conclusions

Requirements for Hydrogen Production

Efficient production of hydrogen is much tougher than production of electricity

Requirements For Hydrogen Production Will Control The Choice Of Reactor

- Hydrogen production places tough requirements on the reactor
  - Temperature >750°C
  - All heat delivered at a high temperature
  - Low pressure
  - Isolation
- The requirements should be the basis for design of a reactor for this application

Hydrogen Production with Nuclear Heat Requires High Temperatures

Production Method	Temperature (°C)
Hot Electrolysis	700-900
Assisted Steam Reforming	To 900
Thermochemical (Leading Candidate)	>750

Low-Pressure Operation Is Preferred

- Low pressures for H_2 production (thermodynamic equilibrium limits)
  - Gas volume increases with chemical reactions
  - Low pressure to maximize yield
- Minimize stress on high-temperature components
- Maximize safety
  - Hydrogen may not be the primary hazard
  - Other hazardous chemicals

The Advanced High-Temperature Reactor

High-Temperature Capabilities

Low-Pressure Operation

Advanced High-Temperature Reactor

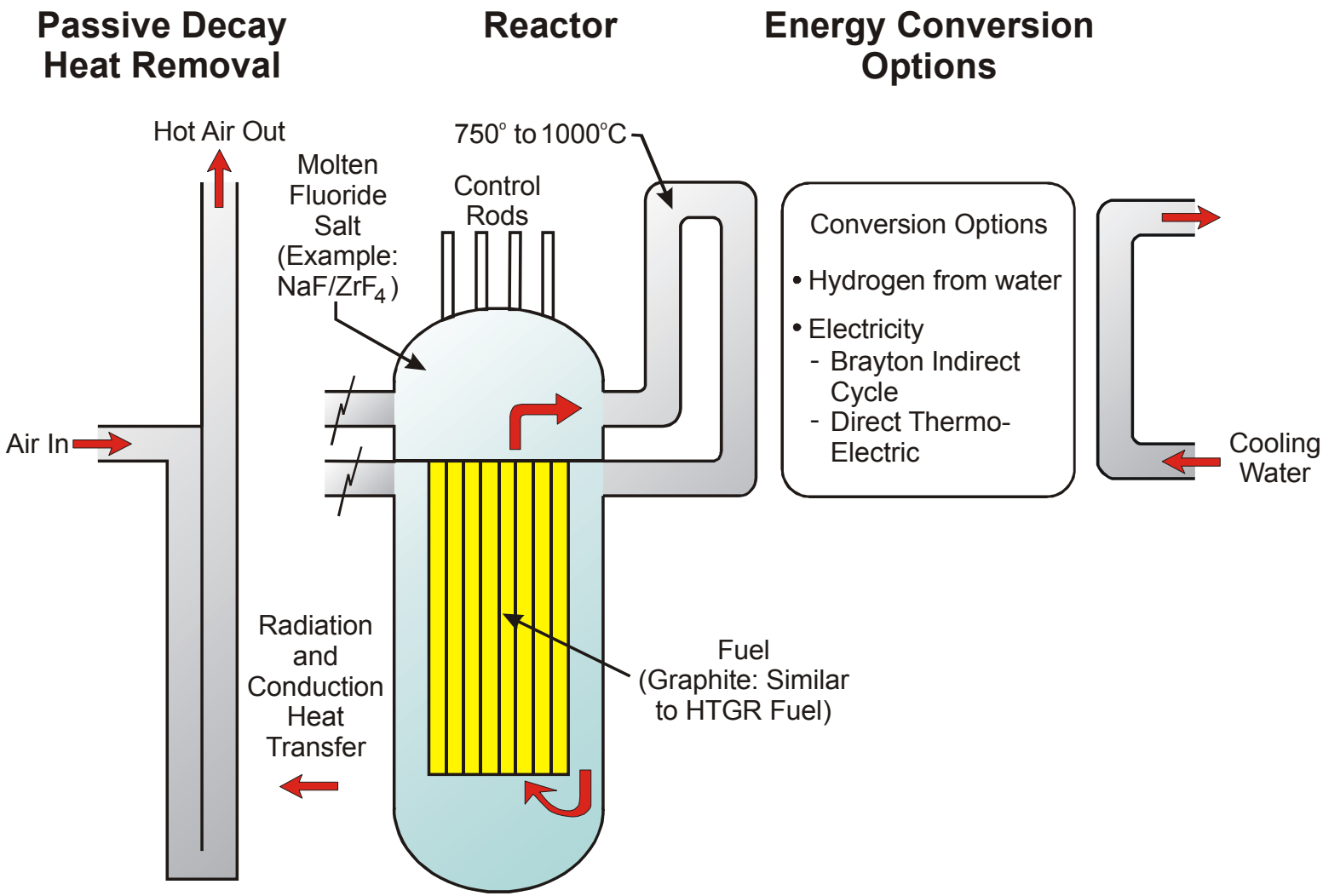

The AHTR Combines Two Technologies To Produce High-Temperature Heat

- **Coated-particle, graphite-matrix fuel**
  - Demonstrated temperature limit of ~1200ºC
  - Same fuel technology planned for modular high-temperature gas-cooled reactors
  - Demonstrated to be compatible with molten fluoride salts
- **Molten fluoride salt coolant (NaF/ZrF_4, etc.)**
  - Very low pressure (boils at ~1400ºC)
  - Efficient heat transfer
    - Similar to that of water
    - Significantly higher reactor coolant exit temperatures for the same fuel temperature limits compared with helium
  - Coolant for proposed fusion energy plants
  - Developed for the Aircraft Nuclear Propulsion Program

High-Temperature Engineering Test Reactor Fuel
(950ºC Helium Exit Temperatures; Japan)

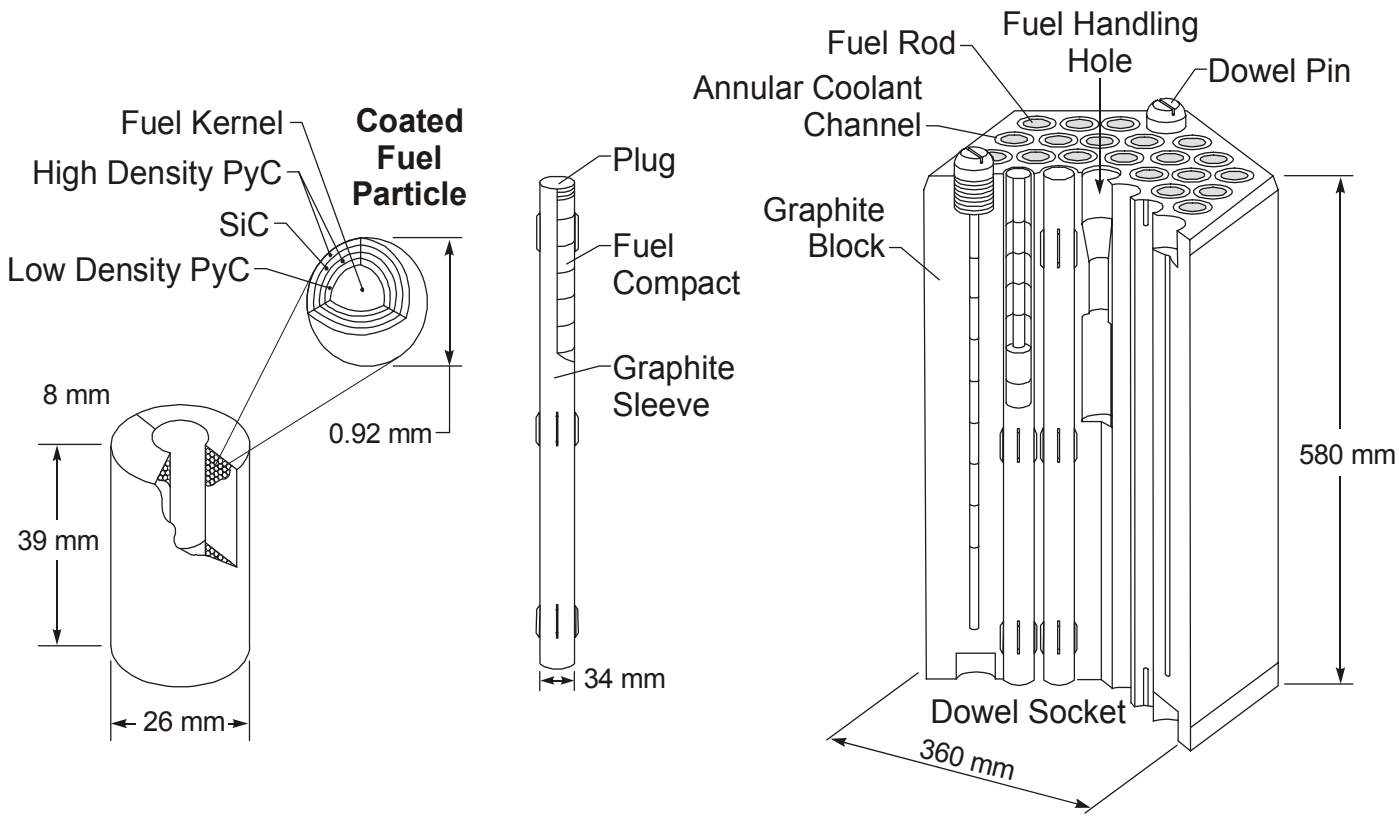

Fuel Compact **Fuel Rod** **Fuel Block**

Boiling Points of Alternative Reactor Coolants
(Molten Salts Allow Low-Pressure, High-Temperature Operations)

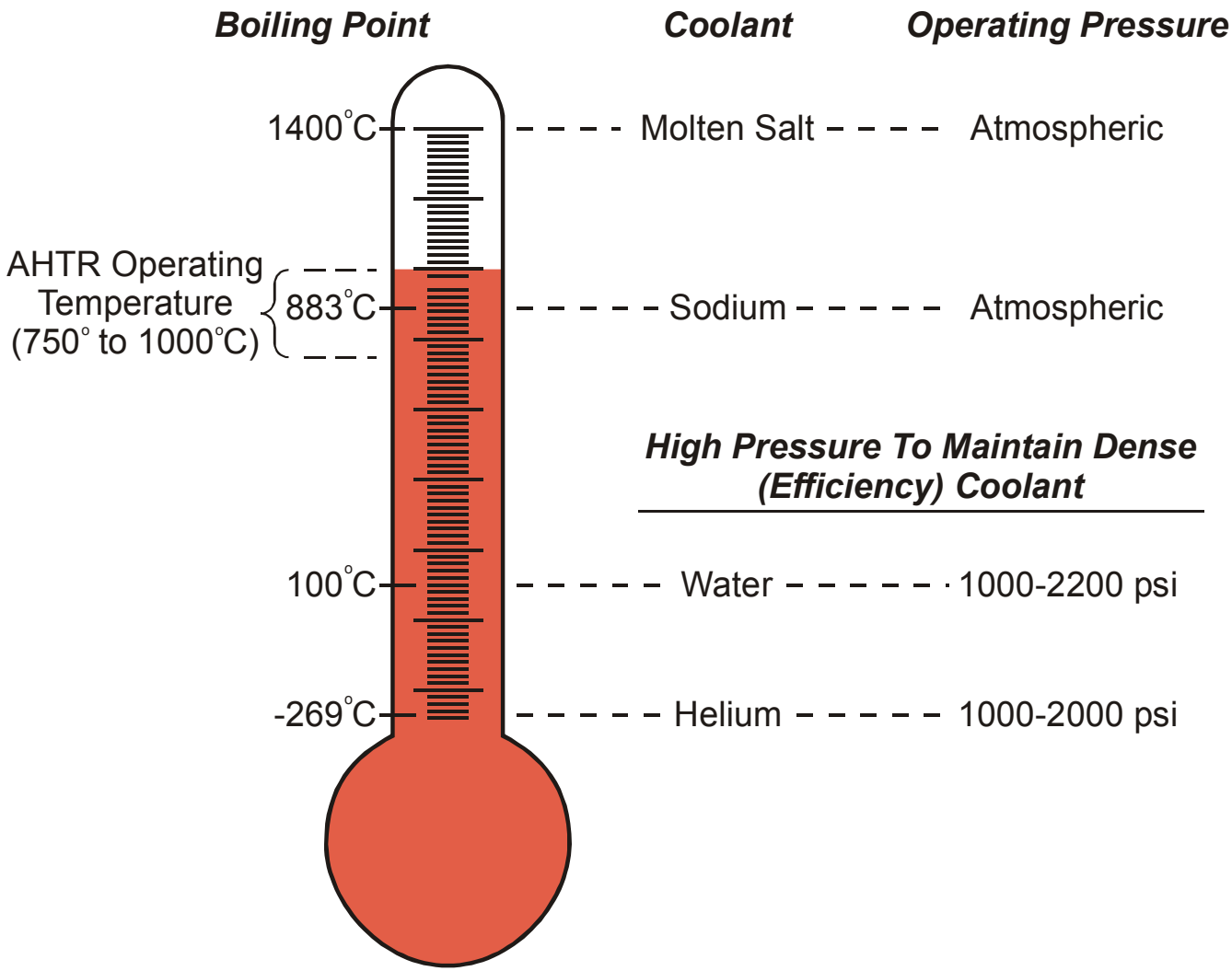

Low-Pressure Liquid Coolants Allow All the Heat To Be Delivered at High Temperatures

(Matches Requirements for Hydrogen Production While Minimizing the Maximum Fuel and Heat-Exchanger Temperatures)

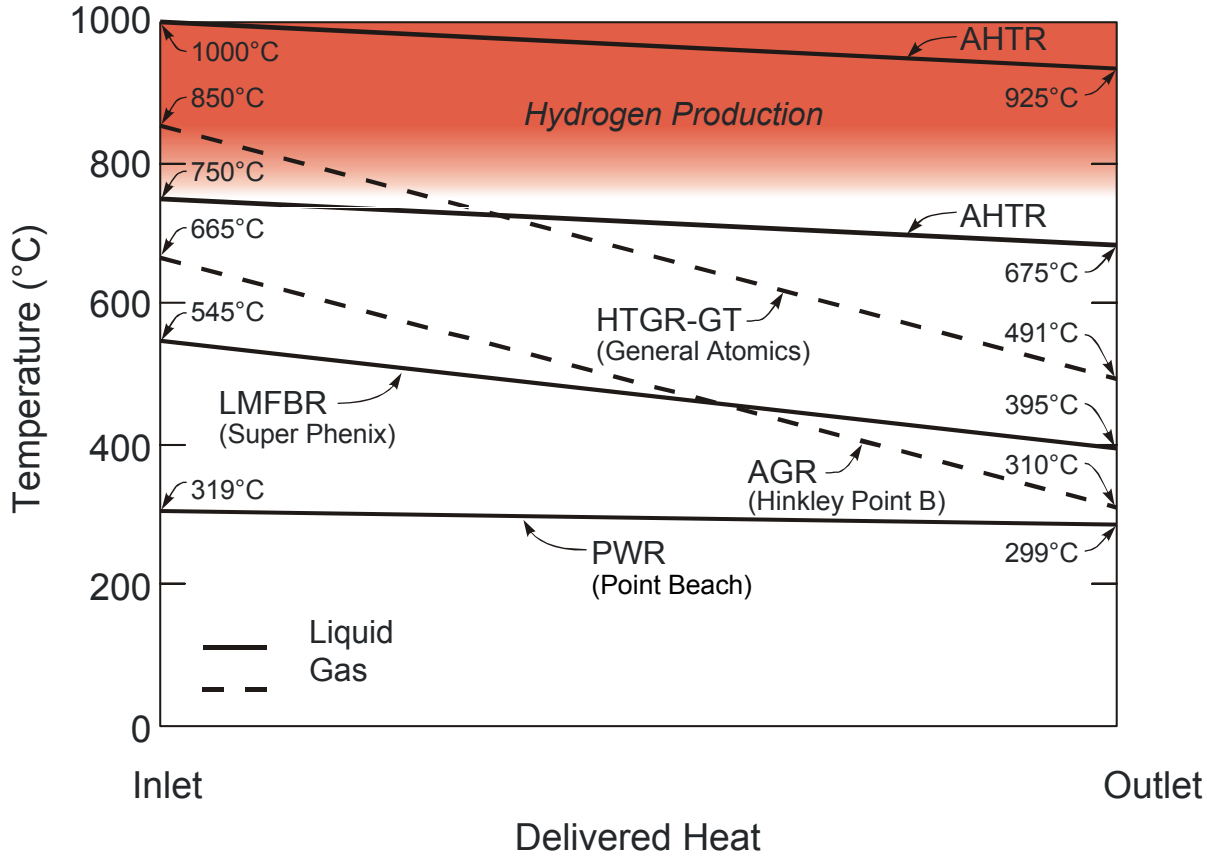

The Safety Case for the AHTR: Accident Control

- Low-pressure (subatmospheric) coolant
  - Escaping pressurized fluids provide a mechanism for radioactivity to escape from a reactor during an accident
  - Low-pressure (<1-atm) salt coolant minimizes accident potential for radioactivity transport to the environment
- Molten salt is a secondary barrier to prevent radionuclide releases to the environment (fission products and actinides dissolved in salt)
- Passive decay-heat-removal systems similar to those of proposed modular liquid-metal reactors

The High-Temperature, Low-Pressure, Liquid Coolant Enables Passive Decay Heat Removal In Large Reactors

(Example: AHTR Using Modular Liquid-Metal Reactor Decay-Heat System)

Passive Decay Heat Removal

Reactor

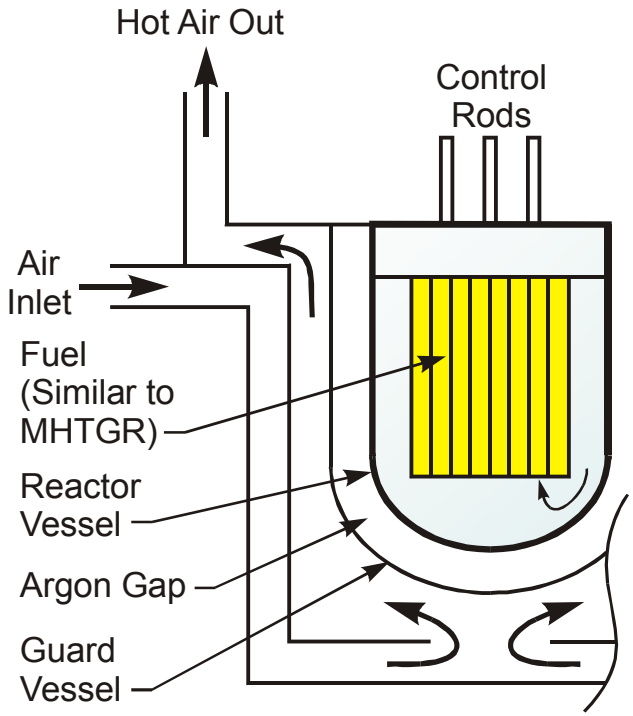

Decay-Heat Cooling System Characteristics

- Similar to GE S-PRISM (LMR)
- Argon Gap
  - Heat Transfer ~T^4
  - Thermal Switch Mechanism
- Heat Rejection Temperature Dependent
  - LMR: 500-550°C (~1000 Mw(th))
  - AHTR: 750-1000°C (>2000 Mw(th))

The Hydrogen-Nuclear Interface

Molten Salts Are a Preferred Interface Fluid Between Nuclear and Chemical Plants

- **Minimize safety and materials issues**
  - Low pressure to minimize stress on high-temperature equipment
  - Low chemical reactivity
- **Low pumping costs**
  - Efficient heat transfer from the reactor
  - Separation between reactor and chemical plant
- **Very large experience base**
  - Aluminum industry uses molten fluoride salts in graphite baths to produce aluminum (100+ years of experience)
  - Molten-salts are the preferred high-temperature heat-transfer fluid in the chemical industry

Development of the Heat-Exchanger / Chemical-Reactor Is a Major Challenge

- Chemical reactor requirements
  - Transfer heat from nuclear system
  - Isolate reactor and chemical plant (both directions)
  - Drive chemical reactions
- Several options exist
  - Intermediate heat-transfer loop between reactor and chemical plant
  - Radiation heat exchanger
  - Other

Unique High-Temperature Requirements for Hydrogen Production May Require Unique Solutions

(Example: A Thermal-Radiation Heat Exchanger/Chemical Reactor for Heat Transfer, Independent Sizing of the Chemical Reactor, and Isolation)

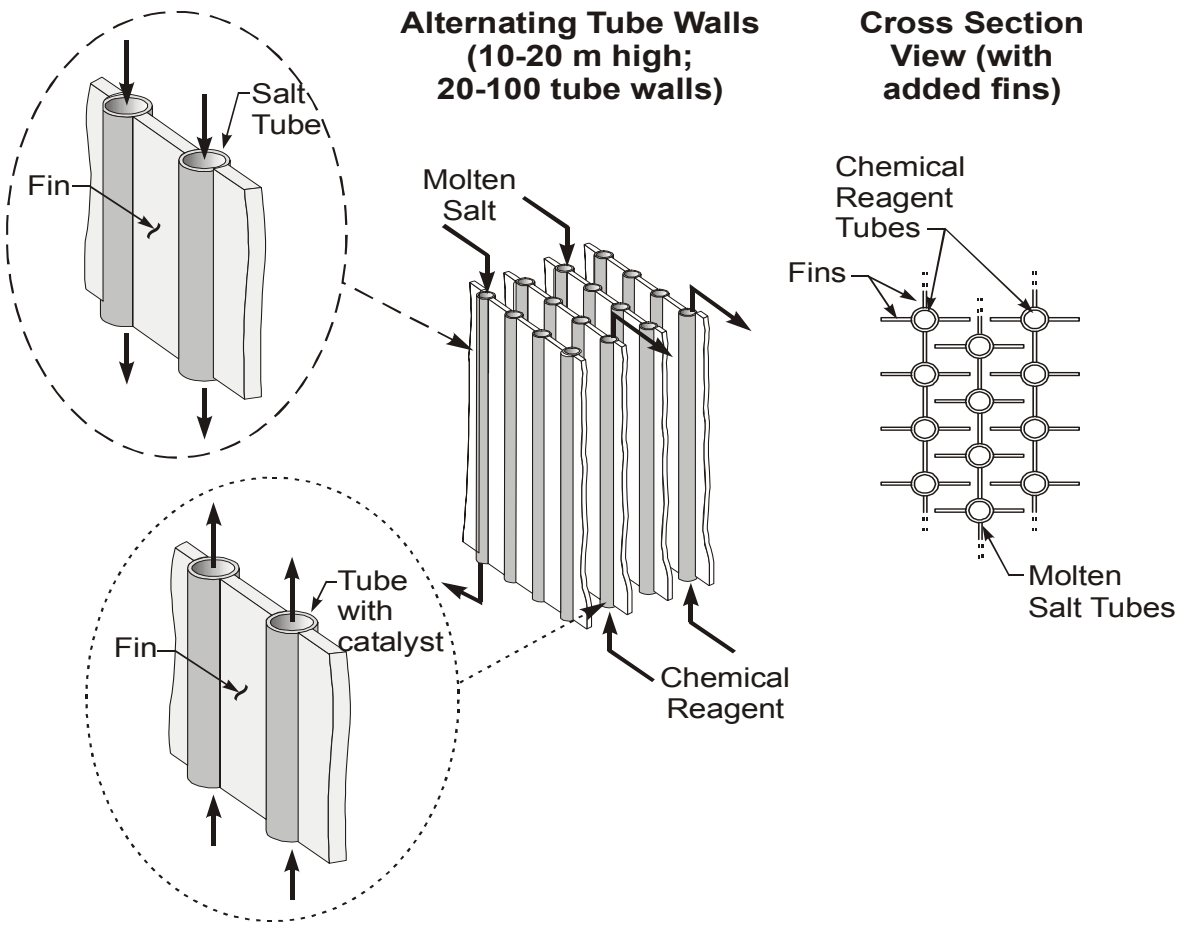

Electricity Production

Efficient Hydrogen Production Implies Efficient Electricity Production

The Temperatures At Which Nuclear Heat Is Supplied Determines Electrical Plant Efficiency

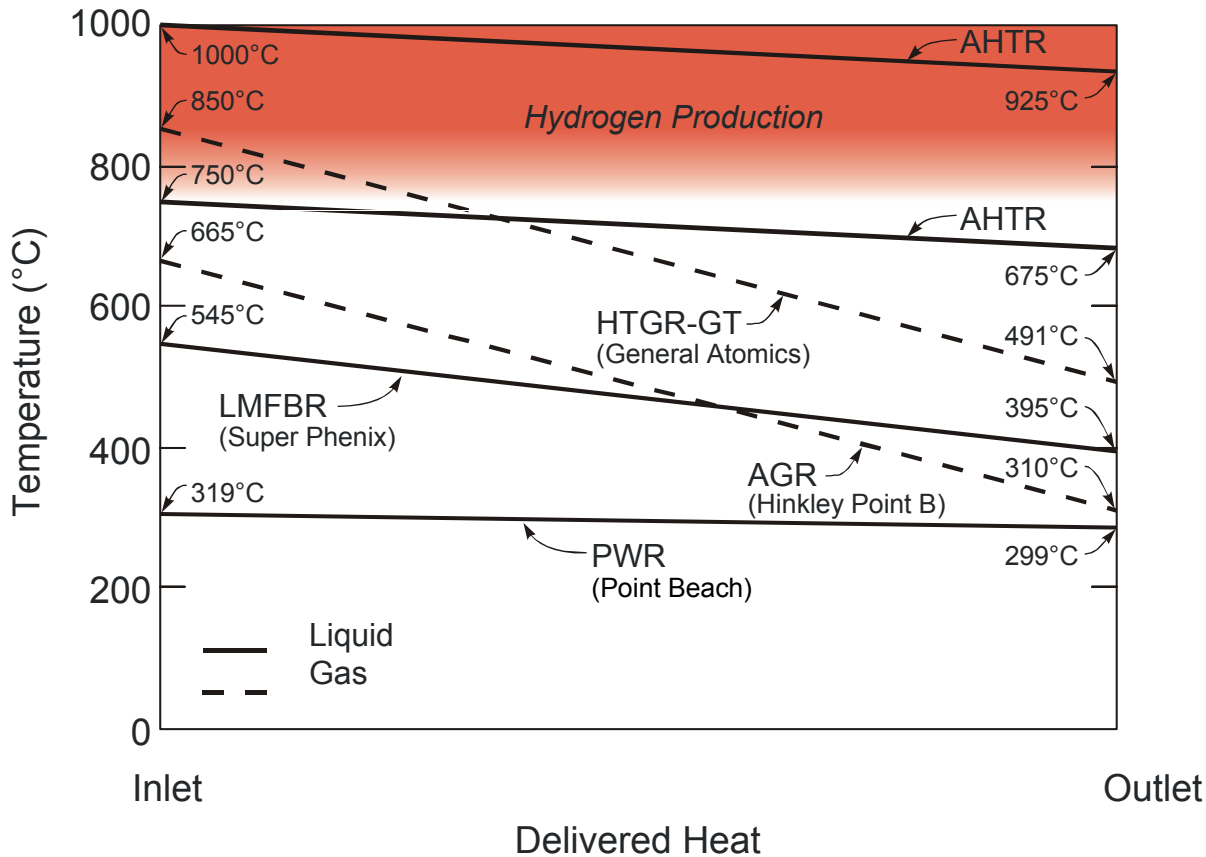

AHTR High-Temperature Heat Enables Use of a Multi-Reheat Brayton Cycle With Efficient Electric Production

(48% at 750°C, 59% at 1000°C)

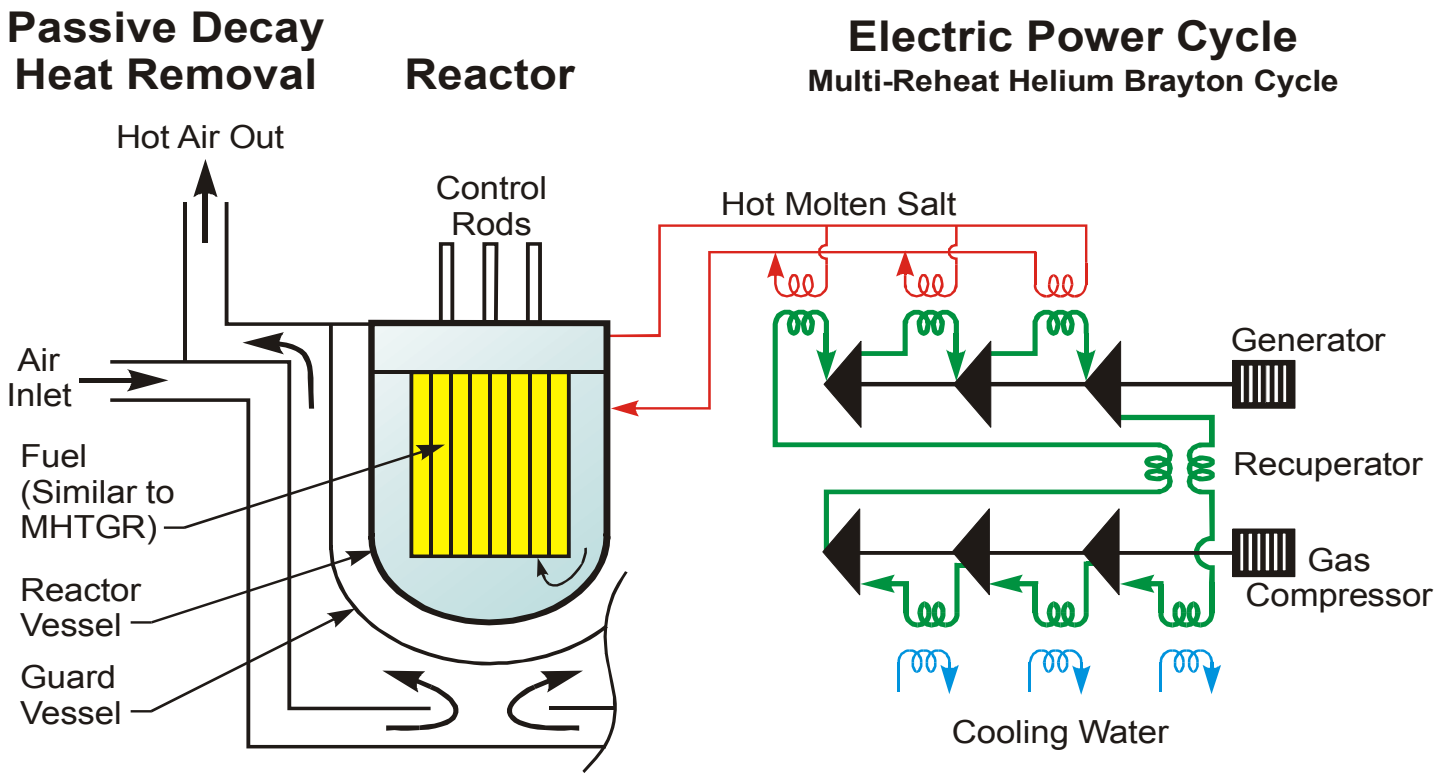

The AHTR Has the *Potential* for Excellent Economics Because It Is a Liquid-Cooled, Low-Pressure, High-Temperature Reactor

- Characteristics of the AHTR
  - 1000 MW(e) [2000 MW(th)]
  - Passive decay-heat cooling
- Economics of scale
  - Many characteristics similar to the GT-MHR but larger [2000 MW(th) vs 600 MW(th)]
  - Same system size as S-PRISM (General Electric) but with 2000 MW(th) output rather than 1000 MW(th)
- Logical follow-on to the GT-MHR as the next step in coated-particle-fuel reactors

Conclusions

- Hydrogen production is demanding
- Reactor design should be driven by the H_2 plant requirements
- The Advanced High-Temperature Reactor
  - Uses highest-temperature commercially-available fuel (coated-particle fuel)
  - Uses molten-salt coolant
    - Compatible with fuel
    - Minimizes fuel/materials temperatures
    - Delivers all the heat at high temperatures
    - Large experience base
    - Compatible with chemical plants