Developing a PRA for IRIS

Michael D. Muhlheim

Randall J. Belles

Oak Ridge National Laboratory

April 2002

Presentation Objectives

- Identify the key elements/benefits of a risk-informed program.
- Describe how to develop a risk-informed program.
- Use International Reactor Innovative and Secure (IRIS) for examples.
- Provide examples using ADS and AFW design alternatives.
- Describe other features of program.
- Provide a summary.

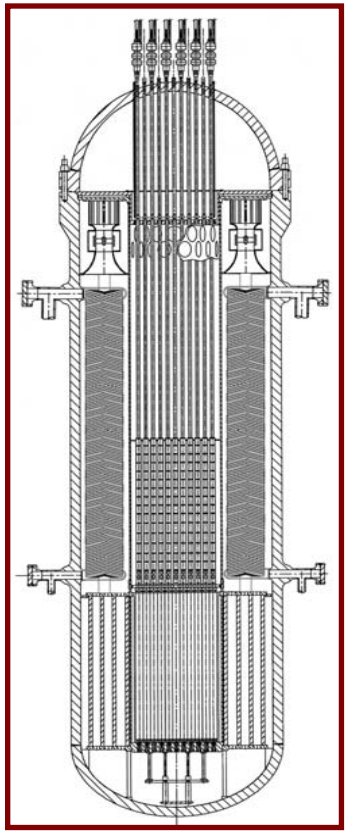

Key Elements of a Risk-Based Design Program

- Use a safety-by-design approach to cover all aspects of safety including internally, externally, and shutdown-initiated events at the very beginning of the design process.

- Include a risk-based approach by identifying changes in the design through PRA that would reduce vulnerabilities, increase plant reliability, and reduce overall risk.

Key Elements (continued)

- Develop a PRA program that allows designers to use the PRA to make design decisions regarding a plant's reliability and safety. This tool must be one that
  - designers could, and more importantly would, actually use;
  - allows designers to learn what makes a system reliable and to see how changes in their system affects other systems; and
  - provides immediate feedback on design alternatives.

Key Elements (continued)

- Build a dynamic PRA that can be easily modified as the design progresses.
- Build system models that are suitable for design tradeoff studies and expand these to evaluate plant aging effects.
- Retain previous design changes for optimization analyses (optimizing a system is not the same as optimizing the plant).

What Should be Included in the PRA

Before developing a PRA for Generation IV nuclear power plants (NPPs), analysts and regulators need to determine what are the most important—and new—concerns that arise.

- **Passive Safety**
- **Reliability**
- **Licensability**
- **Maintainability**
- **Initiating Events/External Events**
- **Shutdown Risk**
- **Modules**
- **Aging**
- **Data**
- **Uncertainty**
- **Human Reliability Analysis**

How to Develop a Risk-Based Design Tool

- Tools that were developed to automatically construct fault trees required simplified system descriptions for the embedded algorithms to work. Simplifications often result in poor models of system behavior and directly translate into a low accuracy of the resulting fault trees.

- The goal of any PRA is to ensure that everything is correctly modeled and properly quantified. An automated system for designers can be accomplished by PRA analysts developing a library of fault trees for different system arrangements and components.

Applying a Risk-Based Approach to IRIS

- **Develop a Baseline PRA for IRIS**. The base-line PRA of IRIS starts with analysts developing the event trees and fault trees for the front line systems as they are now conceived. Balance-of-plant and support systems will be modeled with the fault trees developed for the AP600.

- **Identify Unique Features of Passive Reactors**. Because of the limited design and evaluation experience of passive safety systems, the designs and failure data of passive systems will be collected and cataloged from the AP600 and the CE80+ for creating design alternatives.

Applying a Risk-Based Approach to IRIS (continued)

- **Create Alternative System Designs**: A compilation of system alternatives from the selected Individual Plant Examination (IPE) reports provides designers with risk-based system-design alternatives. Changing the design is as simple as picking a design alternative from a drop-down menu. The code automatically inserts the correct fault tree module and recalculates the parameters of interest. Because the modules can be interchanged, any design alternative not modeled can be easily added by a PRA analyst.

Will "Plug-and-Play" Work?

- A simple problem that gives designers choices of different arrangements for the ADS illustrates this concept. Design alternatives modeled include different numbers of PORVs and alternate initial condition of the block valves (i.e., open or closed).

- A problem that gives designers choices of different AFW arrangements shows the concept works on complicated problems. Current design alternatives include different types and combinations of pumps and their respective support systems.

IRIS 3D Reactor and Containment

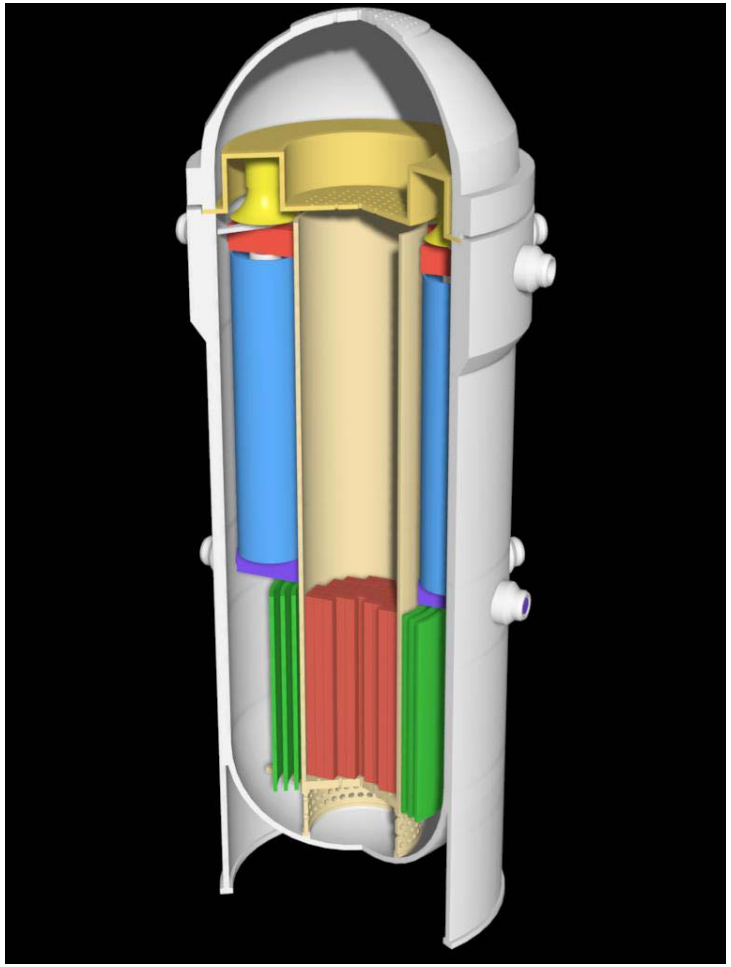

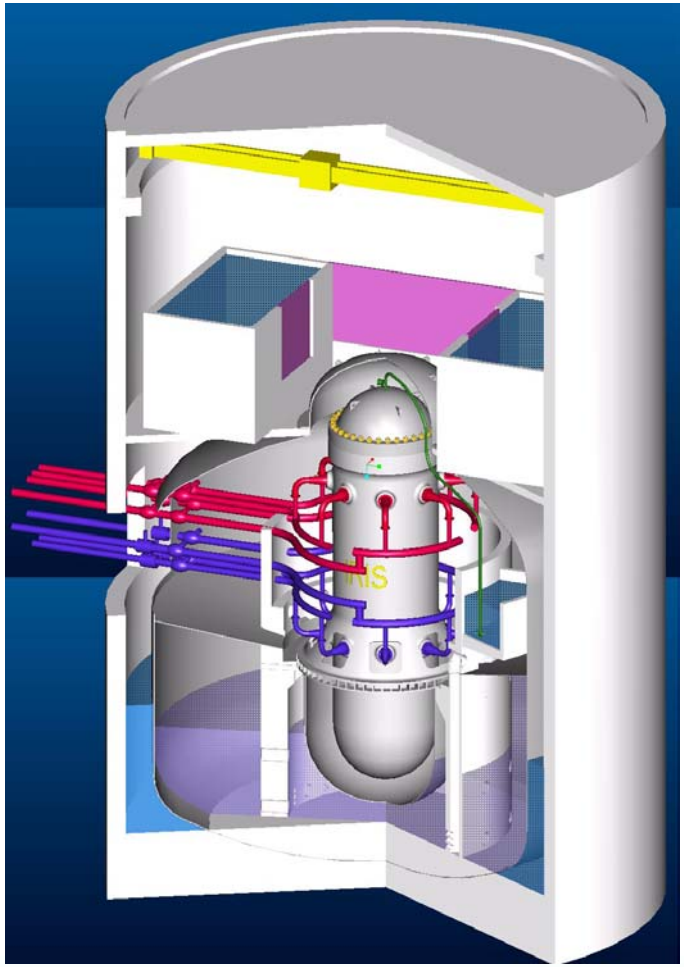

IRIS Safety Systems

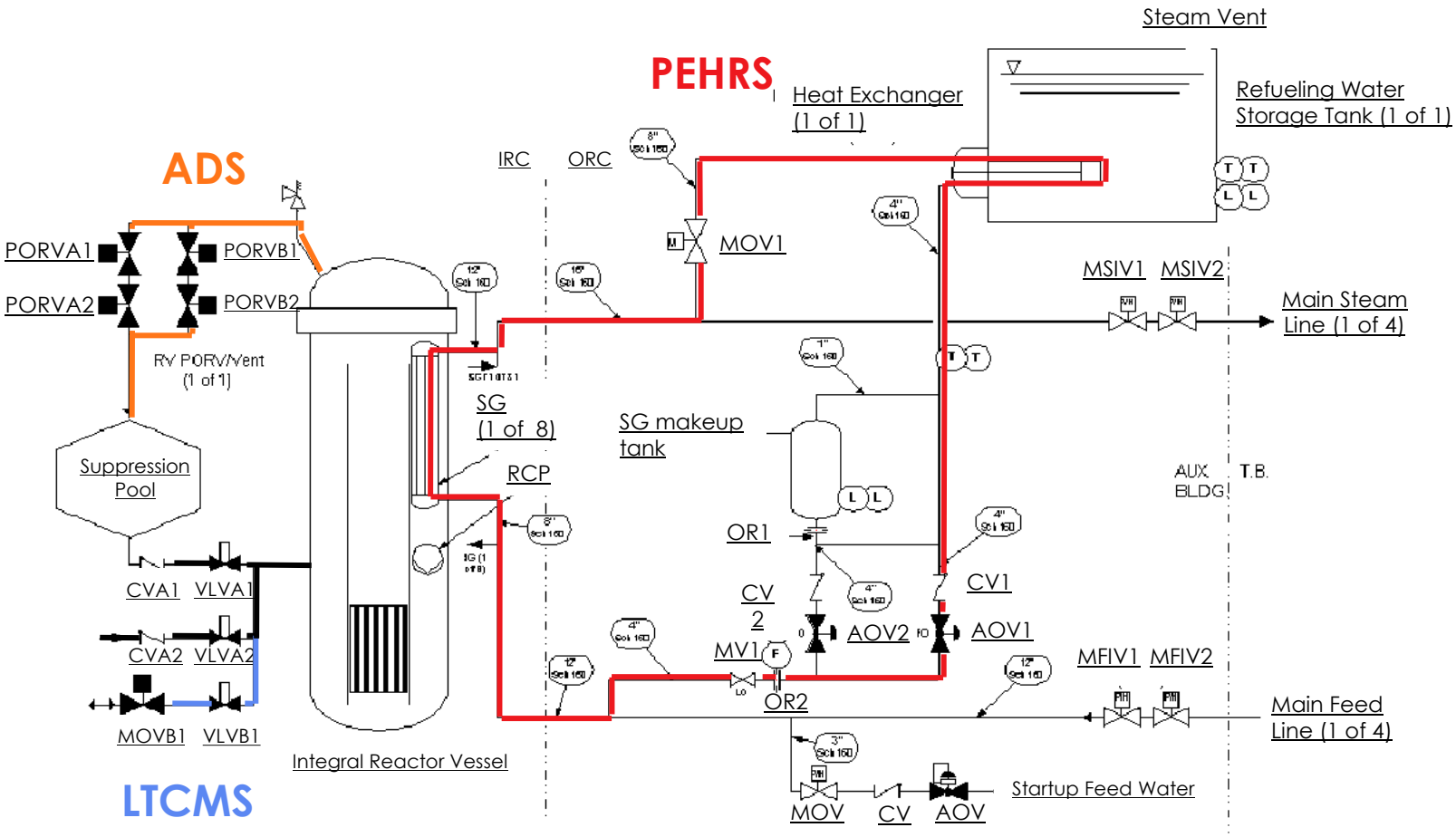

PORV Modeling Options

IRIS ADS

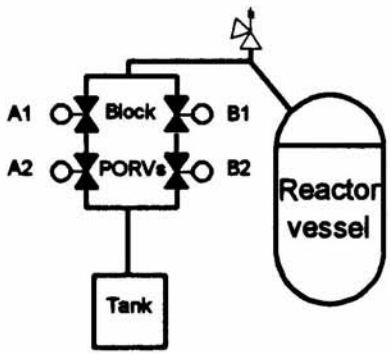

1. PORVs or block valves fail to reclose
2. PORVs and block valves fail to open

Millstone 2 ADS

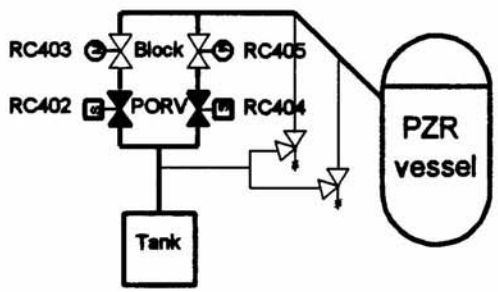

Source: SPAR Model
1. PORVs or block valves and SRVs fail to reclose
2. PORVs and SRVs fail to reclose after ATWS
3. Bleed portion of feed-and-bleed fails
4. PORVs / SRVs challenged during Trans / SBO / LOOP
5. Failure of SRVs and PORVs to relieve RCS pressure

AP600 ADS

(1 of 2 shown)

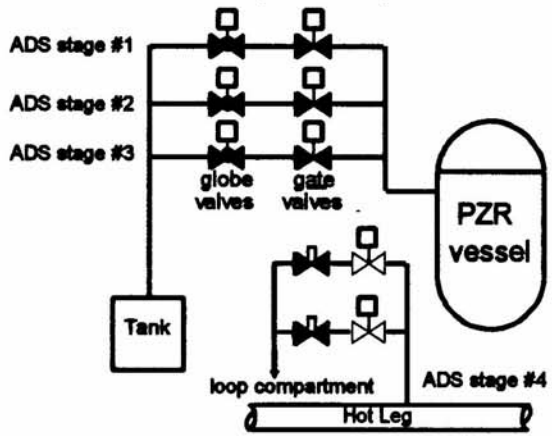

AP600 PRA
1. premature opening
2. spurious actuation
3. stuck open

Braidwood ADS

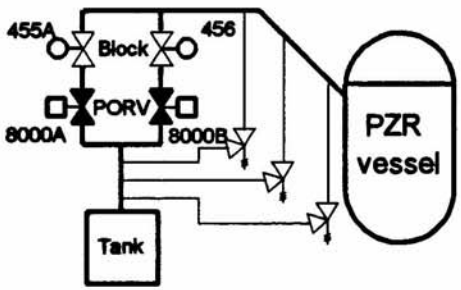

Source: SPAR Model
1. PORVs or block valves and SRVs fail to reclose
2. PORVs and SRVs fail to reclose after ATWS
3. Bleed portion of feed-and-bleed fails
4. PORVs / SRVs challenged during Trans / SBO / LOOP
5. Failure of SRVs and PORVs to relieve RCS pressure

Oconee 3 ADS

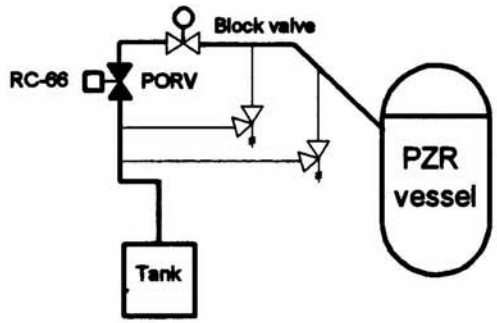

Oconee 3 PRA
1. PORV flow path fails to reclose after auto actuation
2. PORV flow path fails to close after use for HPI cooling
3. PORV flow path fails to open at setpoint
4. PORV flow path not available for HPI cooling

CE80+ ADS

(only shown is rapid depress system; RCGVS not shown)

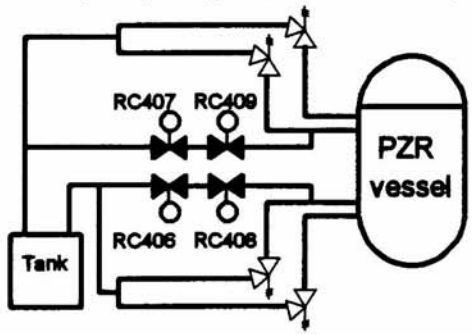

CE80+ PRA
1. Failure of safety depressurization bleed system

PORV Modeling Options

Risk-Based Design Tool by ORNL

File | PRA Level | Components | Systems | Event Trees | Modules | Aging | Options | Reports | Help

- AC Power →
- ADS →
  - PORV →
    - 2-50%
    - 2-100%
    - 1-100%
  - Block Valves →
- Containment →
- DC Power →
- EDG →
- LTCMS →
- MSISO →
- PCCS →
- PEHRS →
- RPS →
- SGISO →

Impact of ADS PORV Options on the System's Failure Probability

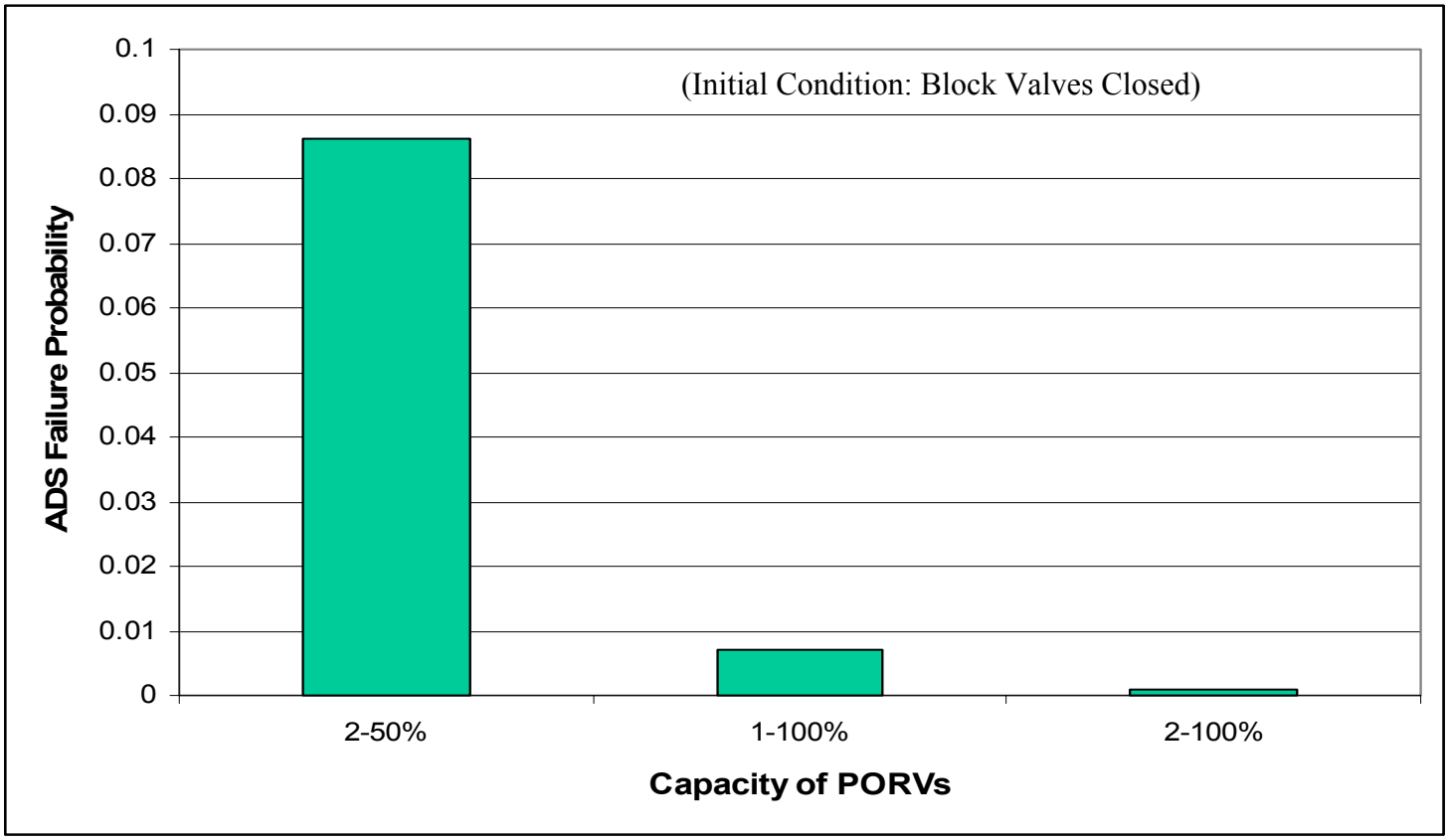

PORV Block Valve Modeling Options

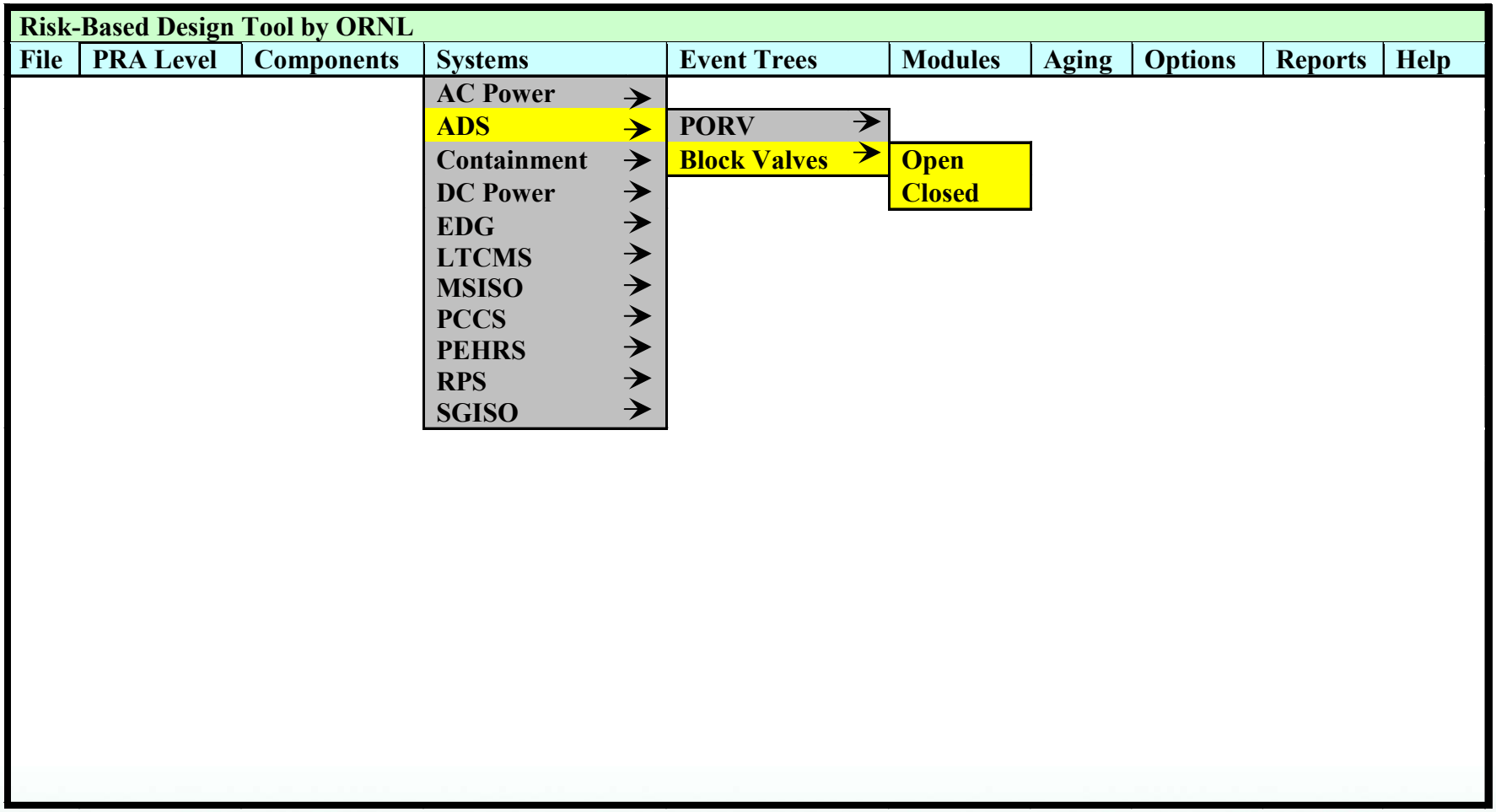

Impact of PORV ADS Block Valve Options on the System's Failure Probability

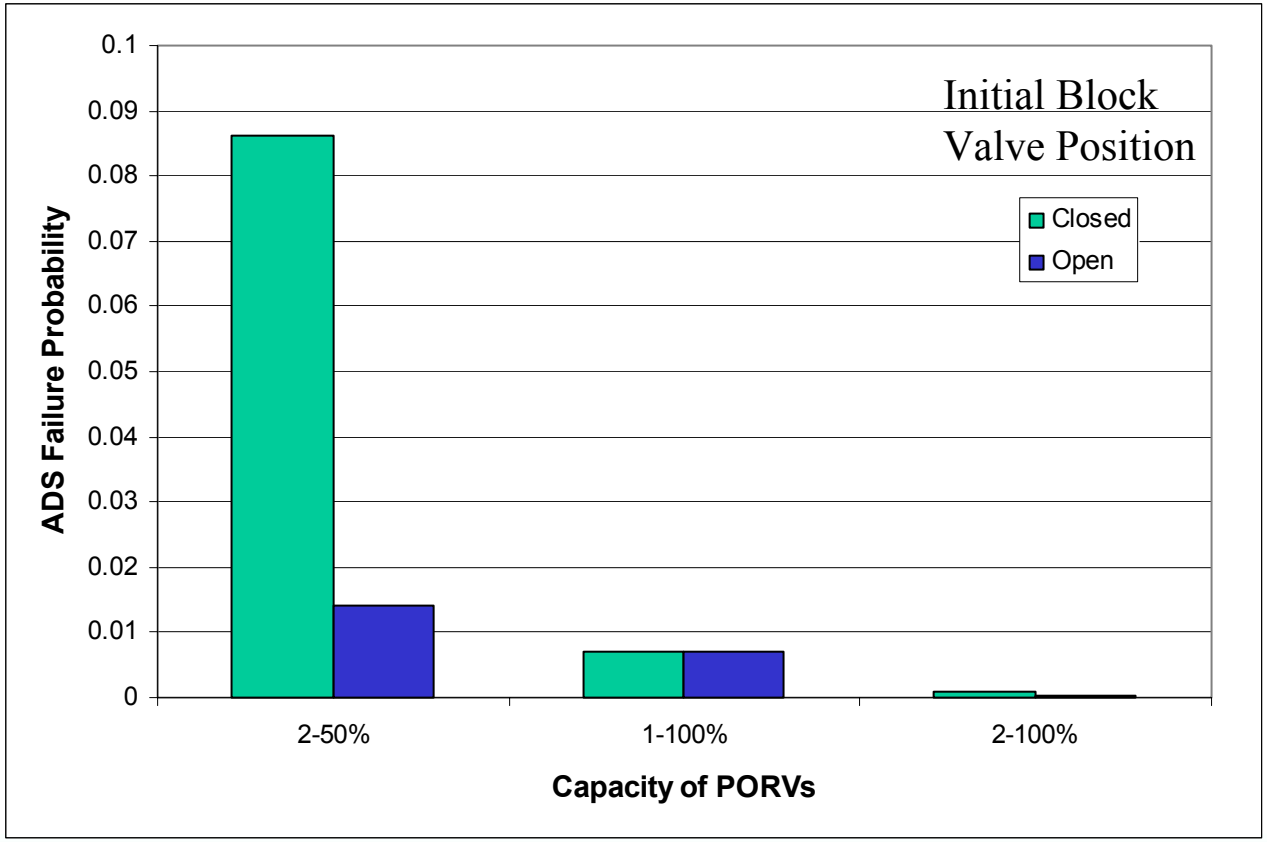

PORV Example Shows the Tool Works

- This simple example shows that designers, with a click of a button, can rank the different PORV arrangements from best to worst in terms of reliability:

  - Best 2–100% capacity PORVs
    1–100% capacity PORV
  - Worst 2–50% capacity PORVs

Insights Gained From PORV Example

Based on this example, designers would learn that

- with only 1 block valve, the initial condition of block valve does not matter—failures of the PORV dominates the reliability of the system;
- 2–50% capacity PORVs is not redundancy and is in fact worse than having just 1 PORV because the failure of either PORV / block valve arrangement causes the system to fail;
- true redundancy (2– vs 1–100% capacity valve) improves reliability by an order-of-magnitude and not the square of the failure probability because of shared systems and components; and
- it is 4–6 times better to have the block valve initially open where it has to spuriously transfer close rather than initially closed and having to open.

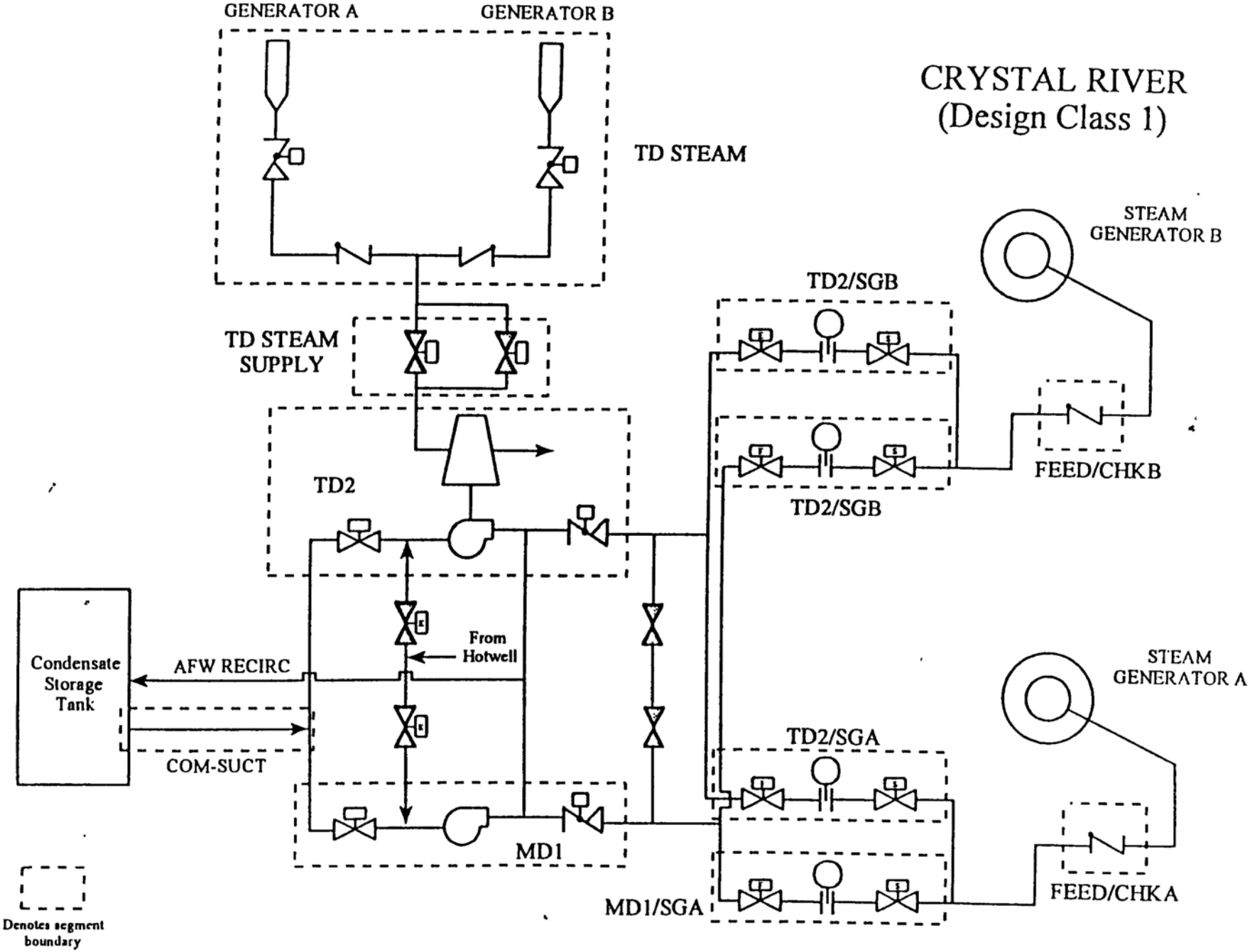

Figure D-3. The simplified P&ID schematics of the reference plants representing the 11 AFW design configurations used in this study.

Reliability of AFW Pumps Based on Fault Tree Models

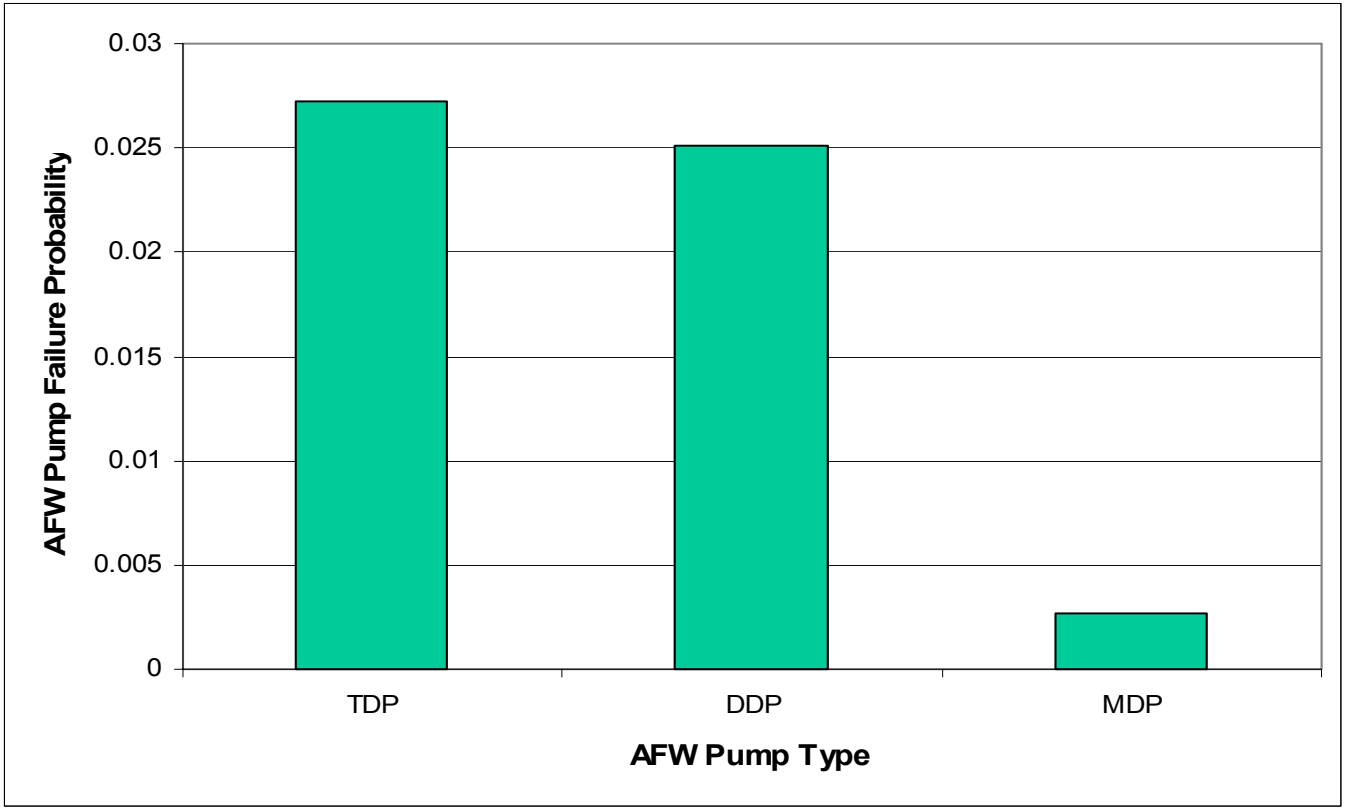

AFW Pump Modeling Options

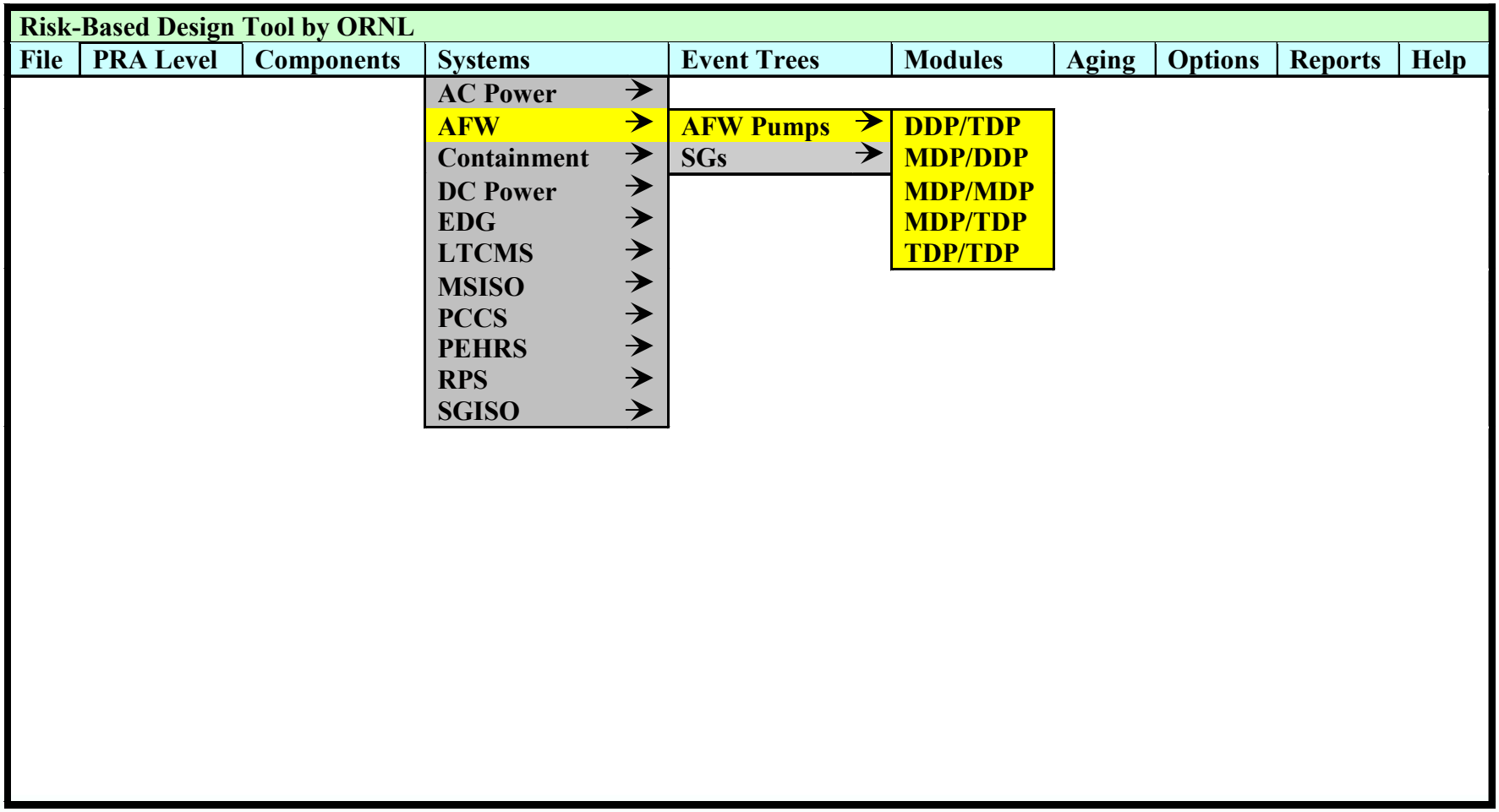

AFW Unreliability Based on Different AFW Pump Combinations

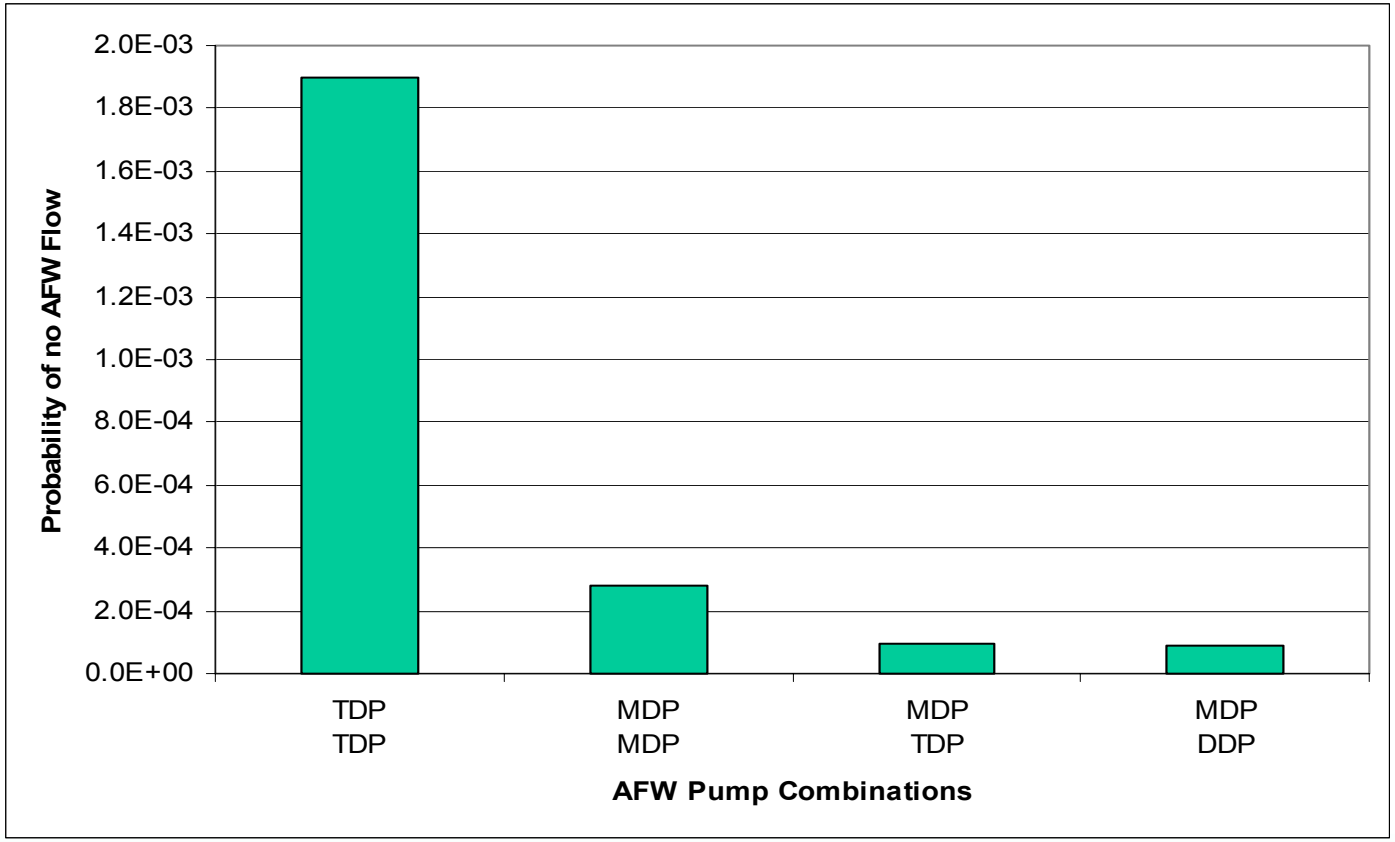

AFW Unreliability Based on Actual Plant Experience

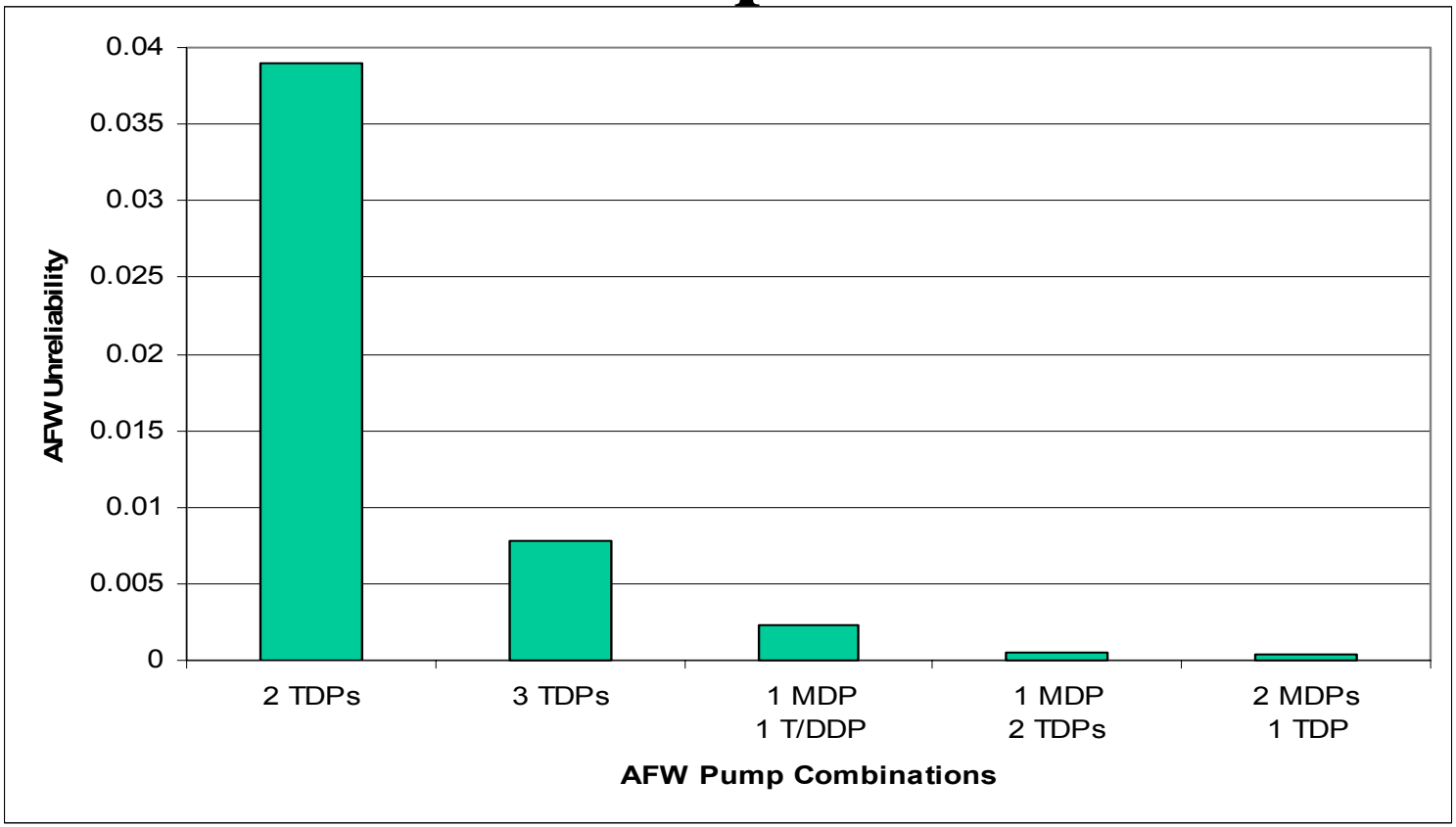

Source: Reliability Study: Auxiliary/Emergency Feedwater, 1987-1995 (NUREG/CR-5500)

AFW Example Shows the Tool Works for Complex Systems

- This complex example shows that designers can change component types and configurations with the common-cause failure data, pump type, and support system information automatically adjusting to the option chosen.

- Based on this example, designers would learn that
  - Using the best components available from a reliability standpoint does not necessarily result in the best system.
  - With a lack of diversity, common-cause failures will dominate.

Other Features of a Risk-Informed Design Tool

- PRA Level (Level 1, 2, or 3)
- Components (maintainability, out-of-service)
- Event Trees (Internal, External, and Shutdown)
- Modules (per plant, per steam generator, per turbine-generator)
- Aging (0-, 1-, 4-, and 8-year options)
- Options (failure data, uncertainties, sensitivity analyses)

PRA Level Modeling Options

Risk-Based Design Tool by ORNL

File	PRA Level	Components	Systems	Event Trees	Modules	Aging	Options	Reports	Help
	Level 1 Level 2 Level 3								

Component Options for Maintenance, Testing, and Out-of-Service Calculations

Risk-Based Design Tool by ORNL									
File	PRA Level	Components	Systems	Event Trees	Modules	Aging	Options	Reports	Help
		AFW-P1 →							
		AFW-P2 →							
		AFW-P3 →							
		AFW-T1 →							
		AFW-T2 →							
		AFW-T2 →							
		AFW-D1 →							
		AFW-D2 →							
		BLK-V1 →							
		BLK-V2 →							
		SOL-V1 →							
		SOL-V2 →							
		CIR-B1 →							
		CIR-B2 →							
		CIR-B3 →							
		PORV1 →							
		PORV2 →							
		PORV3 →							
		RELAY1 →							
		RELAY2 →							
		SWITH1 →							

Event Tree Options

Risk-Based Design Tool by ORNL

File | PRA Level | Components | Systems | Event Trees | Modules | Aging | Options | Reports | Help

- Event Trees
  - Internal →
  - External →
  - Shutdown →
- Modules
  - ATWS →
  - LOCA →
  - Transient →
- Aging
  - Large LOCA
  - Medium LOCA
  - Small LOCA
  - PRHR Break
  - System LOCA
  - RCS Leak
  - SGTR
  - Rx Vsl Rupture

Number of Modules per Site Options

Risk-Based Design Tool by ORNL

File	PRA Level	Components	Systems	Event Trees	Modules	Aging	Options	Reports	Help
					1 module →				
					2 modules →				
					10 modules →	1 Turb-Gen 2 mods/TG 1 mod/TG			

Component Aging Options

Risk-Based Design Tool by ORNL

File	PRA Level	Components	Systems	Event Trees	Modules	Aging	Options	Reports	Help

- No aging
- 1 year
- 4 years
- 8 years

Failure Data Options

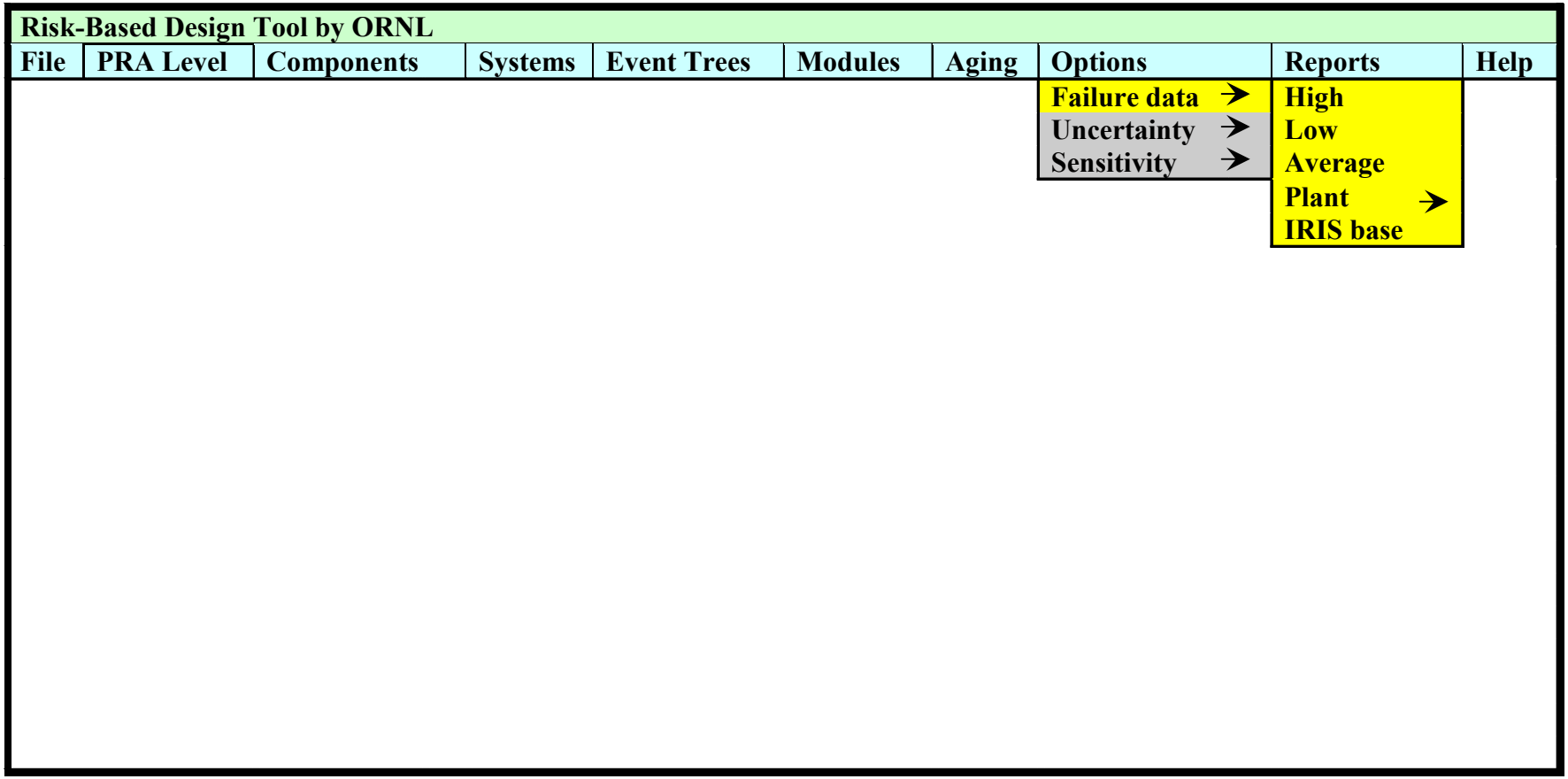

Plant Data Choices

Plant	Millstone 2	North Anna	Watts Bar	Harris	Catawba	Turkey Point	Farley
Loss of DC Bus A	5.66E-02	6.00E-03		9.80E-04	5.88E-06	3.80E-06	2.59E-04
Loss of DC Bus B	5.34E-02	6.00E-03		9.80E-04	5.88E-06	3.80E-06	2.59E-04
Closed Block Valve Fails to Open	2.10E-03	1.09E-02	4.30E-03	5.20E-02	4.00E-03	5.07E-03	3.00E-03
Open Block Valve Fails to Close	2.10E-03	1.09E-02	4.30E-03	5.20E-02	4.00E-03	6.01E-03	
Open Block Valve Plugged	3.75E-07	1.25E-07					
Block Valve Operates Spuriously		5.03E-07	9.27E-08	1.20E-03	9.10E-04	1.52E-06	3.00E-03
Block Valve OOS for Maintenance	9.04E-04	2.00E-04		3.00E-04			
PORV Fails to Operate	1.25E-03	9.99E-03	4.27E-03	1.10E-02	7.00E-03	4.13E-03	7.03E-02
PORV Plugged	3.75E-07	1.25E-07					
PORV Operates Spuriously	7.50E-07	3.89E-06				1.69E-06	
Open PORV Fails to Close	1.25E-03	2.50E-02	2.50E-02	2.40E-02	2.50E-02	5.00E-03	1.84E-02
CCF of PORVs					1.00E-03		
Number of PORVs	2	2	2	3	3	2	2
Depressurization Logic	1 of 2	1 of 2	1 of 2		1 of 3	1 of 2	1 of 2
Feed and Bleed Logic	2 of 2	1 of 2	2 of 2		2 of 3	2 of 2	2 of 2
Primary Relief	1 of 2	3S or 2S and 2P	1 of 2		1 of 3	1 of 2	1 of 2

Minimum
Maximum

Statistical Data Choices

Plant	Average	Max	Min	Median	IRIS
Loss of DC Bus A	1.06E-02	5.66E-02	3.80E-06	6.20E-04	TBD
Loss of DC Bus B	1.01E-02	5.34E-02	3.80E-06	6.20E-04	
Closed Block Valve Fails to Open	1.16E-02	5.20E-02	2.10E-03	4.30E-03	
Open Block Valve Fails to Close	1.32E-02	5.20E-02	2.10E-03	5.16E-03	
Open Block Valve Plugged	2.50E-07	3.75E-07	1.25E-07	2.50E-07	
Block Valve Operates Spuriously	8.52E-04	3.00E-03	9.27E-08	4.56E-04	
Block Valve OOS for Maintenance	4.68E-04	9.04E-04	2.00E-04	3.00E-04	
PORV Fails to Operate	1.54E-02	7.03E-02	1.25E-03	7.00E-03	
PORV Plugged	2.50E-07	3.75E-07	1.25E-07	2.50E-07	
PORV Operates Spuriously	2.11E-06	3.89E-06	7.50E-07	1.69E-06	
Open PORV Fails to Close	1.77E-02	2.50E-02	1.25E-03	2.40E-02	
CCF of PORVs	1.00E-03	1.00E-03	1.00E-03	1.00E-03	

Summary

- A risk-informed design requires a risk-informed safety evaluation.
- PRAs must include more than just internally-initiated events.
- Aging effects, uncertainties, and modular interactions must be included in the design and evaluation process.
- The same types of information currently being used to evaluate IRIS are needed for all Generation IV reactor analyses.