Telerobotic Planning and Control for DOE D&D Operations*

M. W. Noakes, L. J. Love, P. D. Lloyd
Engineering Science and Technology Division, Robotics and Energetic Machines Group
Oak Ridge National Laboratory
Email: noakesmw@ornl.gov, lovelj@ornl.gov, lloydpd@ornl.gov

Abstract

The purpose of this paper is to describe the development of a telerobotic system focused on addressing the complex tasks found in real-world deactivation and decommissioning (D&D) activities for the Department of Energy. Because of the large gap between the conditions and constraints required to implement robotic systems and the conditions encountered in in situ D&D work, nearly all D&D activities that are too hazardous for direct human contact are presently executed using purely teleoperated remote systems. However, teleoperation is slow, expensive, and skill-intensive compared to hands-on task execution. Various model-based schemes and sensor-based enhancements have been previously tried to improve remote systems efficiencies or to permit robotic deployment; however, none meet the capability requirements necessary, other than very narrow task deployment due to restricted ability to operate in the complex unstructured real world. Advances in capability and efficiency can be achieved by developing new telerobotic control methodologies that integrate tasks ideally suited for robotic control with task definitions provided by more traditional teleoperated control. The objectives are to reduce task execution time, reduce the required operator skill level, and to enable the use of tools that are not suited for purely teleoperated control.

Background

The Department of Energy (DOE) currently has many deactivation and decommissioning (D&D) projects underway; however, the vast majority of those projects are performed by human workers in protective suits sent into the hazardous environments to complete activities manually. Most of the more hazardous work, where humans cannot be used directly has been put off until after 2006 due to cost and/or technology concerns. Remote technology has been used successfully to some extent, but D&D operations organizations have complained that the equipment available today is not well suited to their needs [1]. Remote systems as they now exist are too costly in terms of procurement, facility burden, and the requirement for skilled labor to operate. Remote systems are typically described as too slow in task completion and not capable of matching human dexterity. Therefore improvements to current remote system technology are needed to make them more capable and cost effective in support of D&D activities.

The vast majority of robotics research has been focused along traditional lines. This typically involves the use of industrial robots rigidly and solidly fixed in a work cell so that the environment and robot can be registered to each other. World and object models are generated a priori either via manual computer-aided drafting methods or sensor-based schemes, task scripts are generated manually according to some general guidelines, and motions are executed to complete the specified task. There are several major problems with this approach in the context of real-world D&D. For one, any system like this requires a significant facility modification burden to support a work cell, which may not make sense for a building that is being decommissioned and demolished. The use of a separate work cell to conduct remote or automated D&D activities instead of the use of in situ D&D remote technology dictates that somewhere human hands-on presence in the extremely hazardous environment will still be required for up-front preparation. Next, the model, plan, and execute method promulgated by this approach to D&D may actually take longer than direct remote execution, which was previously stated as being too slow. The answer to this may be automated model generation and knowledge representation of what that model means to the robot and how it can interact with it. However, automated model generation in the dirty, dark, low contrast, complex, and unstructured world of D&D is an arduous task that has made little progress towards a deployable solution for many years, despite a large amount of research dollars that have been dedicated to addressing the problem. This is why suited humans are still used where possible and teleoperated remote systems are still tolerated where human access is not possible. True robotics is almost nowhere to be found in these environments.

* Research sponsored by the Office of Science and Technology, Environmental Management, under contract with Oak Ridge National Laboratory, managed by UT-Battelle, LLC, for the U.S. Department of Energy under contract DE-AC05-00OR22725.

"A teleoperator is a machine that extends a person's sensing and/or manipulation capability to a location remote from that person" [2]. All pure teleoperator schemes rely totally and continuously on the operator for each motion. Teleoperation has been in use since the 1950s and primarily arose out of the need to remotely handle severely hazardous nuclear materials [3]. While teleoperators have become highly developed and capable of fairly intricate tasks in the hands of highly skilled operators, they are still slow when compared to hands-on task execution. The slow task completion problem is compounded in the D&D community where a need for high manipulator payloads have resulted in less dexterous manipulators and where cost constraints have dictated the use of unskilled operators (relative to the remote systems community). Despite this slowness of operation, almost all D&D tasks requiring remote execution are still completed with pure teleoperation due to the shortcomings of robotic systems when applied to the unstructured D&D world. While there are many diverse instances of teleoperation in the user community, the dual-arm work platform (DAWP) is one example of teleoperation hardware used in the D&D environment (Figure 1). DAWP was used in the dismantlement of the Argonne National Laboratory Chicago Pile Number 5 (CP-5) research reactor.

Figure 1: DAWP remote system at CP-5.

DAWP performed its dismantlement tasks adequately, removing over 60,000 lbs. of graphite bricks, 2,000 lbs. of carbon steel, 1,7000 lbs. of aluminum reactor vessel, 1,400 lbs. of lead, and 620 lbs. of boral tile. However, the task completion for this effort, which also had to be coordinated with waste packaging and a continuous stream of other non-remote D&D activities, was approximately one year once dismantlement actually started. Once the reactor vessel and associated hardware were removed, the radiation levels dropped sufficiently to permit hands-on execution and remote operation ceased. Operations management would have preferred significantly less time to complete these activities. An extensive list of lessons learned relating to the robotics and remote systems needs of D&D operations was published [1].

Telerobotics was devised as a means to improve on the shortcomings of teleoperators. "A telerobot is a system that beneficially combines human interaction and automation in a single robot system" [3]. The key benefits typically sought are faster and better task completion. While it is possible that telerobotics may be necessary as an enabling technology to complete a task (one of which we will describe later), it is more likely that telerobotics would permit faster and better task completion, would reduce operator fatigue, and would reduce operator training requirements. The earliest useful telerobotics work was completed by Vertut et al. in the mid-1980s [4]. Along with teach/playback recorded motion, they also implemented "software jigs and fixtures" to constrain teleoperation motions to make it easier for an operator to use tools requiring precise alignment such as saws and drills. Many universities and laboratories have expanded on this work. The University of Tennessee at Knoxville (UTK) and the University of South Florida have particularly been focused on these kinds of operator assists [5], [6]. There is no question that operator assists add value to the precision of operation. The difficulty comes in setting up constraint parameters to execute these tasks. The intuition required is beyond almost all D&D category workers (unless they happen to have a Ph.D. in controls engineering and robotics, which then violates the operator cost constraints), and the amount of time required to configure the system may be significantly longer than that required to struggle through the task via pure teleoperation. Another variety of operator assist has been that of Tarn and Xi [3], [7]. They have been more concerned with integration of human-based corrections into a preplanned robotic path to correct for path flaws and to avoid obstacles. This approach was adapted and used successfully to assist in the tedious process of removing severely hazardous waste from the Gunite and associated waste storage tanks at the Oak Ridge National Laboratory (ORNL) [8]. In this case, very specific and narrowly defined telerobotic assists were defined and implemented and then repeated hundreds of times, greatly reducing operator fatigue. Telerobotics work that has specifically been oriented towards D&D cutting tasks has been conducted by Hamel at UTK [3]. An operator first uses sensor data to create a model of the particular D&D task to be completed, a task script is generated, and the task is executed in model-based robotic mode. Again, there is definitely value and progress in the work but

limitations due to task modeling and task scripting suffer difficulties due to model generation time and accuracy, and the required operator education levels are still problematic. Most telerobotics research to date has been either limited in capability with respect to real-world D&D type tasks or has avoided addressing the major constraints due to D&D operator education or experience levels.

The nature of many D&D operations require disassembly and size reduction of a variety of structures in an unstructured environment. For example, process equipment in canyon cells (2 at Savannah River and 5 at Hanford) is in need of disassembly of massive components requiring high precision and heavy payloads. Figure 2 shows an example of such a cell. The nature of the environment is highly unstructured and D&D systems are flexible and do not have a fixed base providing the motivation for some form of human control. The research presented in this paper is to explore the role of telerobotics for future DOE D&D tasks such as the canyon cell disassembly. Specific topics of interest are telerobotic control and human machine interfaces. We begin by describing the telerobotic system in development at ORNL, its computational architecture, system components, and man-machine interfaces. This is followed by a description of the present task focus, cutting structures with plasma torches. The operational requirements for the plasma torches place tight performance constraints on the manipulator's control. A brief outline of the control design is provided. Preliminary experimental results and a description of future research are included.

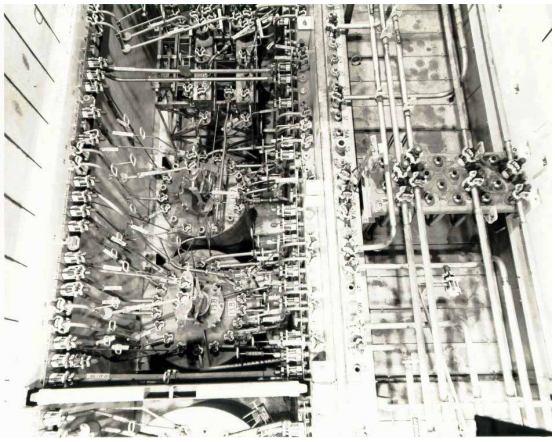

Figure 2: Canyon cell.

System

There are two fundamental objectives of this project that affect hardware and software configuration. First, develop a telerobotic system targeting future DOE D&D field deployment activities. Second, design the system to be flexible in that it serves as a testing facility for future laboratory and university telerobotics research. Most D&D activities require the manipulation of high payloads. Subsequently, the majority of D&D activities rely on hydraulic manipulation systems. At the present time, the manipulator of choice is the Schilling Titan series of manipulators. Our current configuration consists of a single Titan II, shown in Figure 3. Future work will include a second arm for dual-arm operations. Figure 4 shows our modular tool exchange system. Uniform blocks fitted with a variety of tools provide a uniform interface to the manipulator. The docking and pickup of each tool is preprogrammed providing rapid robotic control of the tool exchange. The user interface, shown in Figure 5, consists of a compact remote operator console with multiple camera views. All of the monitors and views are controlled by a single-touch panel display, permitting dynamic configuration of the operator display.

Figure 3: Manipulator configuration space.

Figure 4: Tool exchange.

Under purely teleoperated control, tool exchanges can take anywhere from a few to many minutes depending upon the experience of the user and the complexity of the tool. With the existing robotic tool exchange, it takes less than one minute to change tools. However, what is possibly more important is the reliability. Our experience with tool interchange (using experienced operators) shows a success ratio on the order of four times out of five. To date, we have successfully interchanged the tools over 100 times without a failure even though expert operators were not used. The basic tool block, shown in Figure 4, is based on a uniform block with a compliant docking configuration. The compliant components, while not as sophisticated as a remote compliance center device, provide tolerances for successful docking that are slightly larger than the repeatability of the arm. The basic elements consist of tapered pin and hole elements around the periphery of the block with compliance between the block and holes. The primary advantage of this approach to tool interchange is low cost, reliability, and simplicity.

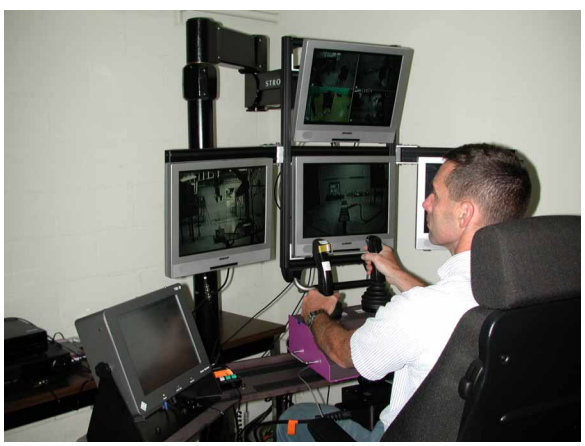

Figure 5: Operator console.

To enable telerobotic control development, the existing Schilling control system has been replaced with a PC-104 controller (the arm level controller in Figure 6) consisting of a Pentium II computer, A/D, D/A, and a resolver to digital converter boards. The real-time operating system is based on QNX Neutrino. This computer is dedicated to real-time control of the manipulator (running at 200 Hz) and to data acquisition. User commands (e.g., tool exchange, path planning, video control) are provided through a Windows NT TouchScreen PC. The software development on this project has focused on enabling the necessary interface for future university and industry telerobotics algorithm testing and integration. A high-level controller manages communications and switching between the arm level controller and the telerobotic controller(s). The telerobotic controllers contain all higher level robotics functions that are described in the following sections.

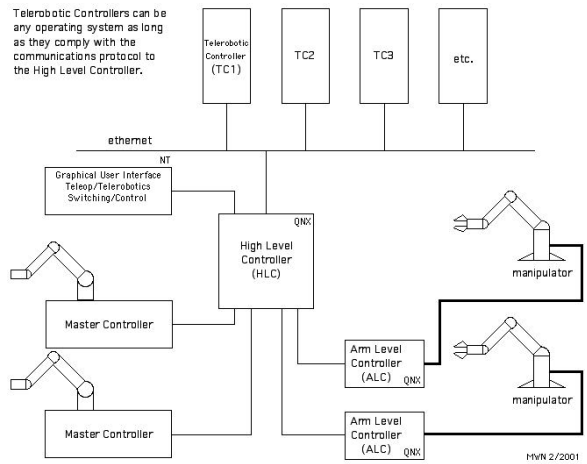

Figure 6: Control architecture.

Planning and Control

To facilitate the use of robotics in the unstructured D&D environment, a general scheme based on sensor data has been used for the path planner that governs tool deployment. Accurate robotic operations require calibration of a manipulator to its environment. Calibration is not an option for many D&D operations. The manipulation systems are generally mobile. In the case of CP-5, as shown in Figure 1, the system was mounted on an overhead crane. Since graphical world models would be difficult or impossible to efficiently construct and register in a timely manner, sensor data is used to locate only those points of immediate interest. The operator specifically selects those points using a sensor tool that includes an ultrasonic sensor for registering the environment to the robot. With this approach, it is not necessary to calibrate the robot with the environment; calibration is obtained through the use of the sensor tool during the planning of the task. A general path planning capability automatically generates the necessary path per operator guidelines.

It is clear from the nature of the operations described earlier that hydraulic manipulators, due to their high payload to weight ratio, are generally used for D&D operations. The Schilling Titan class manipulators are the more popular manipulators for D&D activities due to their payload capacity (240 lbs. at 78 inches), reach of 78 inches, lightweight (175 lbs.), and slender profile (cross section of 16 square inches). With these benefits

there are limitations. Hydraulic systems are characterized by their potentially large variation in the plant dynamics. Payloads typically vary from nothing to over 200 lbs. The effective hydraulic fluid bulk modulus, which impacts actuator stiffness, can vary due to temperature. Servovalves have nonlinear flow characteristics and generally have a threshold of approximately 0.5% of the signal. Joint sensory feedback is based on resolvers with 12-bit R-to-D conversion. Subsequently, the kinematic positioning resolution of the arm is between 0.02 mm and 8.2 mm, depending upon configuration. Furthermore, each Titan is kinematically different due to machining tolerances (±0.5 degree tolerance). In an attempt to keep the profile small, many of the joints use rotary actuators that tend to have high levels of nonlinear friction. We have previously reported on the tendency of such systems, hydraulic systems with large nonlinear friction, to exhibit limit cycle behavior and the impact on control design [9]. In addition, the compliance of the base, or transport system, reduces the absolute positioning accuracy of a system. We previously described our approach to sensor-based task calibration. This methodology removes the requirement of calibrating the system in the field by using sensory feedback in the task definition. For our control development, we analyzed each joint of a Schilling Titan II under various configurations, operating conditions, and payloads identifying a nominal plant for each joint as well as an upper and lower bound on the plant parameters. The focus was on identifying the magnitude and phase, as a function of frequency, excitation amplitude, configuration, and payload. Each of the joint's natural frequency is between 2 Hz and 6 Hz. Subsequently, we measured the magnitude and phase at 8 discrete frequencies between 0.25 Hz and 10 Hz. The payloads were zero, 23 lbs., 43 lbs., and 78 lbs. The amplitude varied from 10% to 80% full scale, capturing the plant variation due to excitation amplitude. Figure 7 shows the measured data for the shoulder pitch joint along with the nominal, minimum and maximum plants.

It is clear that there is significant variation in the gain and natural frequency of the joint during reasonable variations in the operating conditions. For this joint, there is approximately an 8 dB gain variation and the natural frequency shifts from 2.9 Hz to 5.8 Hz. The damping coefficient varies from 0.45 to 0.79. This high damping is a characteristic of the Titan class of rotary hydraulic actuators. The control design must either be robust to these variations or adapt. At the present time, we are using lag-lead compensators to develop a frequency based control scheme robust to plant variations. Clearly, robust stability is penalized with a decrease in performance. Alternative control strategies, either adaptive or nonlinear, hold the potential for increased performance. However, for the tasks at hand, a fixed gain linear compensator has demonstrated the tracking performance necessary for successful and robust execution of all of the tasks required of the arm to date.

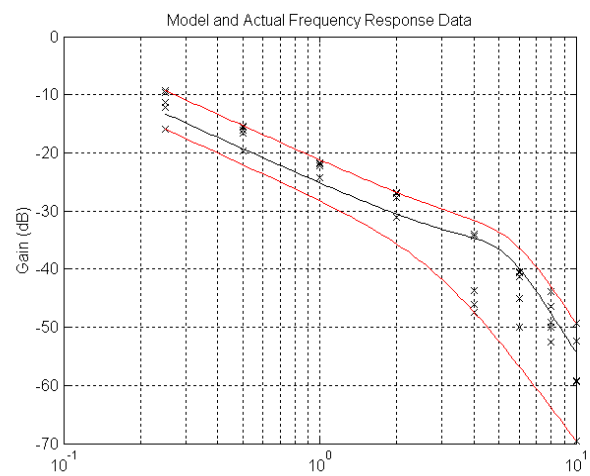

Figure 7: Frequency response (data, nominal, minimum, and maximum model).

Experimental Results

A large portion of D&D tasks are directed at size reduction of large parts. Frequently this is done manually with reciprocating saws, band saws, and circular saws when flame cutting cannot be used and with plasma arc cutting where flame cutting is permissible. The saws have been successfully adapted to remote D&D applications. However, the blades wear quickly and are prone to binding and breaking. Plasma torch cutting has been much more difficult to adapt to the remote systems approach. In some cases, contact fixturing has been used to manage the difficult standoff issue, but feed rate control and visibility are problematic, and torch tip wear is much higher than if a standoff gap is maintained. Force control issues come into play if telerobotic operation is attempted to improve on the difficult teleoperation task. Maintaining an actual standoff from the work surface was considered the best first approach to telerobotic torch cutting.

A conventional plasma torch requires that the tip of the torch is between 3.2 mm and 9.5 mm off the cutting surface. These tolerances are only slightly above the positioning resolution of the Schilling manipulator frequently used in D&D. Controlling

the motion of the manipulator within these tolerances through a purely teleoperated interface is extremely difficult. However, careful control design can enable task resolutions within these tolerances in a robotic mode. The specific advantage of the plasma torch over conventional saws is the speed of the cut, low wear rate, and minimal impact on the manipulator from interaction forces between the tool and the environment. However, several aspects of the plasma torch make it impractical to use in conjunction with a purely teleoperated system, especially those that employ the less-dexterous, high-payload, industrial arms typically found in current D&D operations. Of key significance among these, are the tight tolerances on standoff (3.2 mm to 9.5 mm standoff) and velocity (10 mm/sec). Improperly controlled, the torch is ineffective and its tip wears prematurely, resulting in even worse performance. When standoff and velocity are properly maintained, the plasma torch can produce clean, slag-free cuts in a single pass. However, even in the hands of a skilled worker, small amounts of slag can sometimes prevent separation of the two pieces on the first pass. In a remote operation, the exact location of such slag is generally very difficult to determine. Again, retracing the exact path in order to remove the slag is virtually impossible using teleoperation alone. In addition, since an equivalent of a welders mask is not readily implemented on the cameras used for visual feedback to the operator, the plume of light from the torch during the cutting process (see Figure 11) obscures the visual cues necessary for teleoperation. These challenges are examples of the issues that provide some of the motivation for the telerobotic approach we have outlined in this paper. Other, potentially negative, aspects of the plasma torch (e.g., fire safety, the introduction of a tool requiring pressurized air into environments often maintained at negative pressure, grounding issues, and the possibility of generating toxic fumes) are recognized and must be addressed separately.

The advantages of cutting with a plasma torch is the high speed and long tool life relative to mechanical (saws/shears) cutting techniques. Besides the fact that there are places where plasma cutting could be a fire hazard, the disadvantage is the tight displacement tolerances. Cutting in an unstructured environment is an additional problem. While there has been a great deal of effort devoted to modeling the environment, there is little guarantee that the environment can be modeled within these tight tolerances. Furthermore, while the positioning resolution and repeatability of the arm is below 2 mm, the absolute accuracy is likely to be greater than 10 mm. This provides one motivation for a telerobotic approach: using sensory data from the manipulator in a teleoperated mode to identify and capture arm configurations needed to execute a task robotically. An additional tool for capturing the target points of the task consists of an ultrasonic range finder. Figure 5 shows the torch and range finder in their tool holder. The purpose of the range finder is to have sensory information relating environment target points to the actual configuration of the arm. By using an ultrasonic range finder, it is possible to measure the standoff distance (50 mm to 250 mm) between the tip of the sensor and the environment. Then the target configuration of the arm is computed by projecting the tip of the arm forward to the point where the tip of the torch would be 6.4 mm off the target cutting surface. Using this approach, it is possible to record as many points for the cutting task as desired. Figure 8 shows the standoff, measured with an ultrasonic sensor, during the cutting process, clearly demonstrating that the tracking performance is within the operational bounds of the torch (3 mm to 10 mm). While it may be possible to develop adaptive or nonlinear control algorithms to improve upon this performance, the reader must bear in mind two points. First, the kinematic resolution of the arm is approximately 0.8 mm at the range of operation (approximately 1.75 m from the base). Furthermore, most of the operations in which high accuracy are required are low speed. Thus, the dominant challenge to the control design is overcoming nonlinear friction.

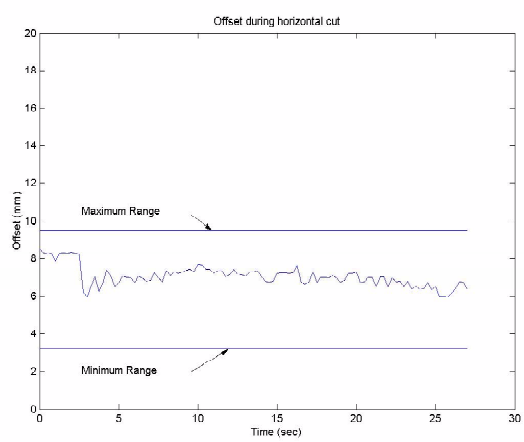

Figure 8: Standoff in mm.

Finally, Figures 9 through 11 show the results of both the horizontal cut (collected in the data above) and a vertical cut. Figure 9 shows a close up of the back side of the vertical cut, illustrating the resulting slag.

Figure 9: Close up of back of vertical cut.

Figure 10: Close up of front of vertical cut.

Figure 11: Resulting cuts.

Figures 9 through 11 should show the quality of the cut possible with a plasma torch and the existing manipulation system. The specific advantage of the plasma torch over conventional saws is the speed of the cut (~ 1 inch/sec), low wear rate, and impact on manipulator from interaction forces between a saw and environment. However, there are a number of disadvantages. Tight cutting tolerances for standoff and speed control make plasma cutting nearly impossible for purely teleoperated tasks. In addition, all visual cues are lost during the cutting process, as evident in Figure 12, due to the plume of light. These two challenges are the motivation for the telerobotic approach we have outlined in this paper. Also, cutting of some materials (such as stainless steel) emit toxic fumes. However, the specific D&D environments that these systems will operate in are tightly controlled and toxic fumes are one of the lower level hazards in the environment.

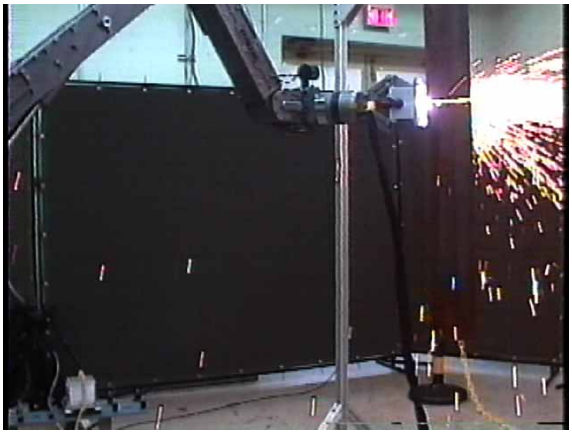

Figure 12: Torch cutting L-bracket.

Conclusions

The motivation for this paper was to describe a telerobotic testbed directed at the development and assessment of future telerobotic efforts directed at DOE D&D activities. We describe the basic components of this testbed and describe preliminary experiments (robotic tool exchange, teleoperated sensor assisted path planning with robotic path execution) directed at enabling technologies (metal cutting with plasma torch) that in the past was unavailable due to tight performance requirements not feasible in purely teleoperated control modes. In the next year we will address a number of additional issues. We are focusing on specific size reduction tasks, such as cutting structural members such as I- and H-beams, cutting curved surfaces (such as barrels and containment vessels) as well as preliminary integration with on-going university and industry developed telerobotics research.

References

1. Noakes, M. W., "CP5 Reactor Remote Dismantlement Activities: Lessons Learned in the Integration of New Technology in an Operations Environment," Advanced Robotics Beyond 2000, 29th International Symposium on Robotics, Birmingham, UK, April 27-May 1, 1998.

2. Sheridan, T. B., Telerobotics, *Automation, and Human Supervisory Control*, The MIT Press, 1992.

3. Ghosh, B. K., Xi, N., and Tarn, T. J., *Control in Robotics and Automation: Sensor-Based Integration*, Academic Press, 1999.

4. Vertut, J. and Coiffet, P. "Teleoperators and Robotics, Evolution and Development, Robot Technology," Vol. 3A, Hermes Publishing, 1985.

5. Chan, T. F., Dubey, R. V., and Noakes, M. W., "Generalized Bilateral Control for Dissimilar Kinematic Teleoperators and Application to D&D Type Tasks," American Nuclear Society Sixth Topical Meeting on Robotics and Remote Systems, Monterey, California, February 5-10, 1995.

6. Everett, S. E., "Human-Machine Cooperative Telerobotics Using Uncertain Sensor and Model Data." Ph.D. dissertation, University of Tennessee, 1998.

7. Xi, N., "Event-Based Motion Planning and Control for Robotic Systems." Ph.D. dissertation, Washington University, 1993.

8. Brady, K., Tarn, T., Xi, N., Love., L., Lloyd, P., Davis, H., and Burks, B., 1997, "Remote Systems for Waste Retrieval from the Oak Ridge National Laboratory Gunite Tanks," *International Journal of Robotics Research*, Vol.17, No.4, April 1998.

9. Love, L., Kress, R., Jansen, J., Kress, R., "Control of Hydraulically Actuated Flexible Robots with Prismatic Links," *IEEE Control Systems Magazine*, Vol. 180, No. 1, pp. 34-41, Feb. 1998.