The Advanced High-Temperature Reactor:
Matching Nuclear Power Systems to Thermochemical Hydrogen Production

Charles Forsberg
Oak Ridge National Laboratory
P.O. Box 2008
Oak Ridge, TN 37831-6179
Tel: (865) 574-6783
E-mail: forsbergcw@ornl.gov

Paul S. Pickard
Sandia National Laboratories
P.O. Box 5800
Albuquerque, NM 87185
Tel: (505) 845-3046
E-mail: pspicka@sandia.gov

Session 139: Hydrogen and Nuclear Power
American Institute of Chemical Engineers' Spring Meeting
American Institute of Chemical Engineers
New Orleans, LA
March 12, 2002

The submitted manuscript has been authored by a contractor of the U.S. Government under contract DE-AC05-00OR22725. Accordingly, the U.S. Government retains a nonexclusive, royalty-free license to publish or reproduce the published form of this contribution, or allow others to do so, for U.S. Government purposes. File name: AHTR.AIChE.2002

OAK RIDGE NATIONAL LABORATORY

Sandia National Laboratories

Outline

- Requirements for hydrogen (H_2) production
- The Advanced High-Temperature Reactor
- Nuclear–H_2 interface issues
- Conclusions

Requirements for Hydrogen Production

Temperatures >750°C

Low Pressures (Highly Desirable)

Isolation

Characteristics of Hydrogen from Natural Gas Steam Reforming

- Heat + methane (CH_4) + water (H_2O) ☑ hydrogen (H_2) + carbon dioxide (CO_2)
- Endothermic process
  - Natural gas is used today to provide the heat and some reduced hydrogen
  - Nuclear option replaces natural-gas heat source
- Heat input to 900°C

Hydrogen from Steam Reforming of Natural Gas Requires High-Temperature Heat (to 900°C) from the Reactor

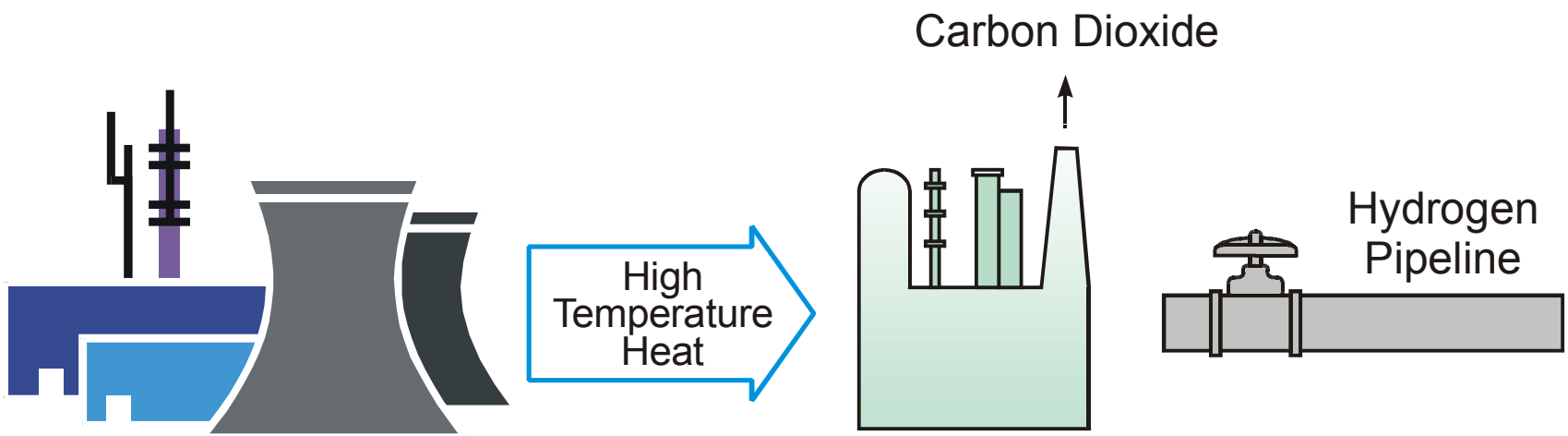

$$CH_4 + 2H_2O \rightarrow CO_2 + 4H_4$$

Characteristics of Hydrogen from Hot Electrolysis

- Heat + water + electricity ☑ hydrogen (H_2) + oxygen (O_2)
- Heat replaces some of the electric demand
- Heat input at 700 to 900°C

Hydrogen from Hot Electrolysis Requires High-Temperature Heat (700-900°C) and Electricity

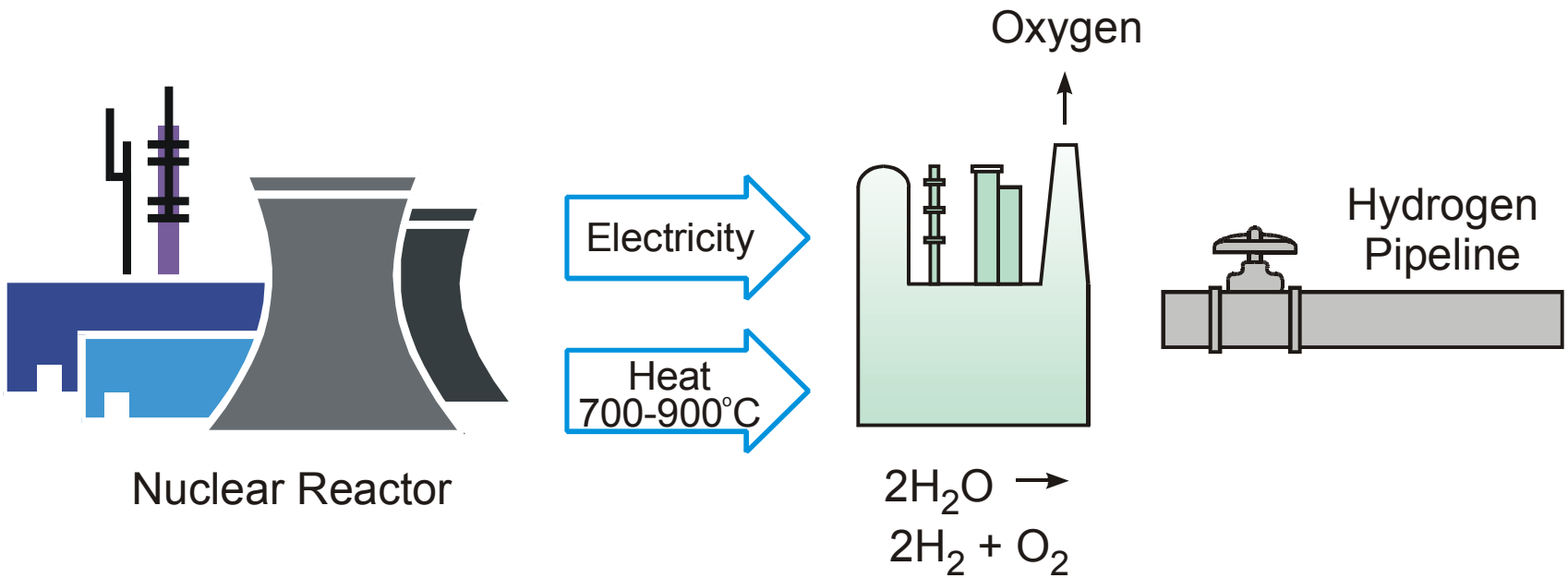

Characteristics of Hydrogen from Thermochemical Cycles

- Heat + water ☑ hydrogen (H_2) + oxygen (O_2)
- Heat input >750°C
- Leading candidate for nuclear H_2 production
  - Projected thermochemical efficiencies of >50%
  - Projected best long-term economics (60% of cold electrolysis)
    - Electrolysis: heat to electricity to H_2
    - Thermochemical: heat to H_2

Thermochemical Processes Convert High-Temperature Heat and Water to H_2 and Oxygen

(Example [leading candidate]: Iodine–Sulfur Process)

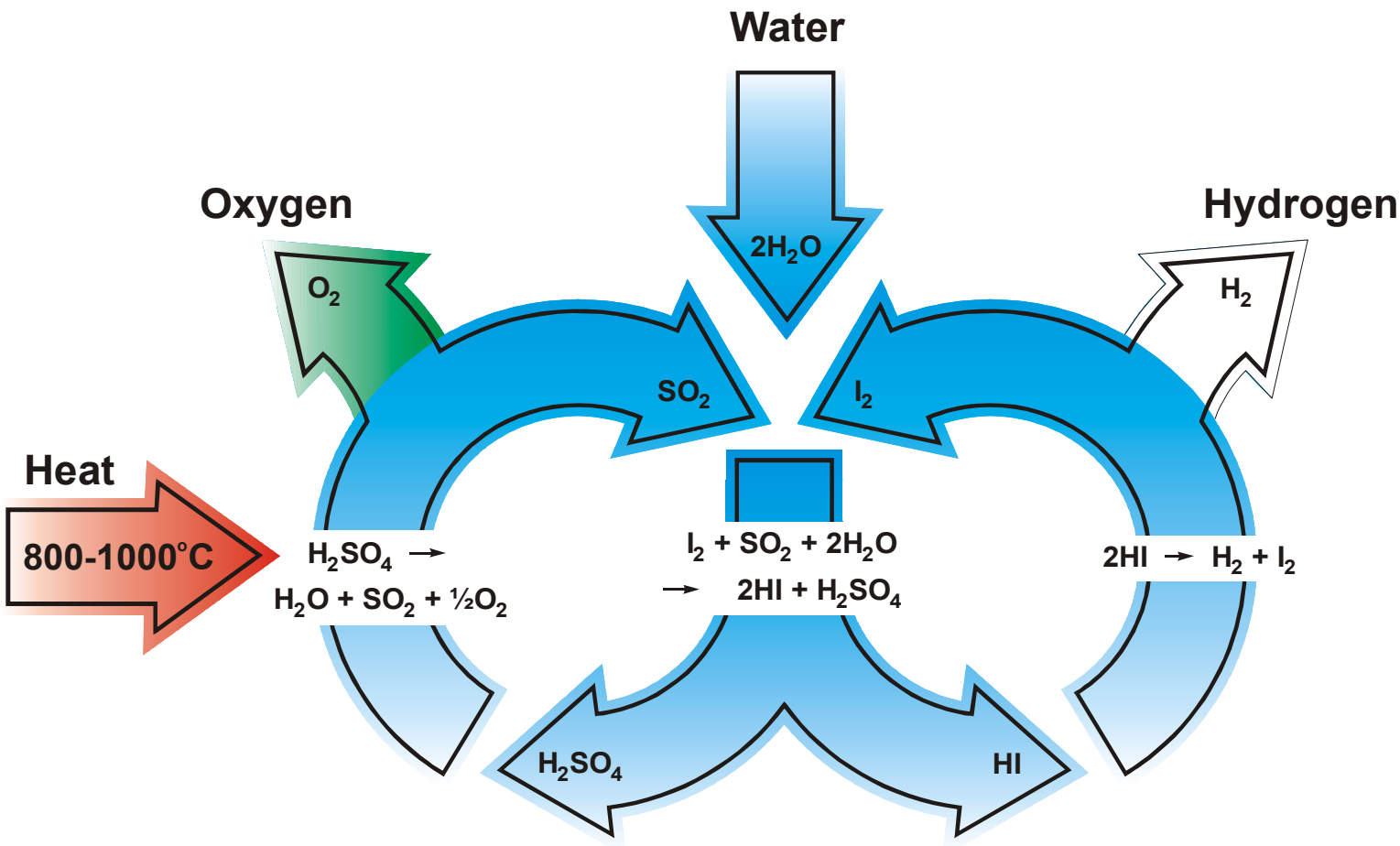

Hydrogen Production with Nuclear Heat Requires High Temperatures

Production Method	Temperature (°C)
Hot Electrolysis	700-900
Assisted Steam Reforming	To 900
Thermochemical	>750

Low-Pressure Operation Is Preferred

- Low pressures for H_2 production (thermodynamic equilibrium limits)
  - Gas volume increases with chemical reactions
  - Low pressure to maximize yield
- Minimize stress on high-temperature components
- Maximize safety
  - Hydrogen may not be the primary hazard
  - Other hazardous chemicals

The Advanced High-Temperature Reactor

High-Temperature Capabilities

Low-Pressure Operation

Advanced High-Temperature Reactor

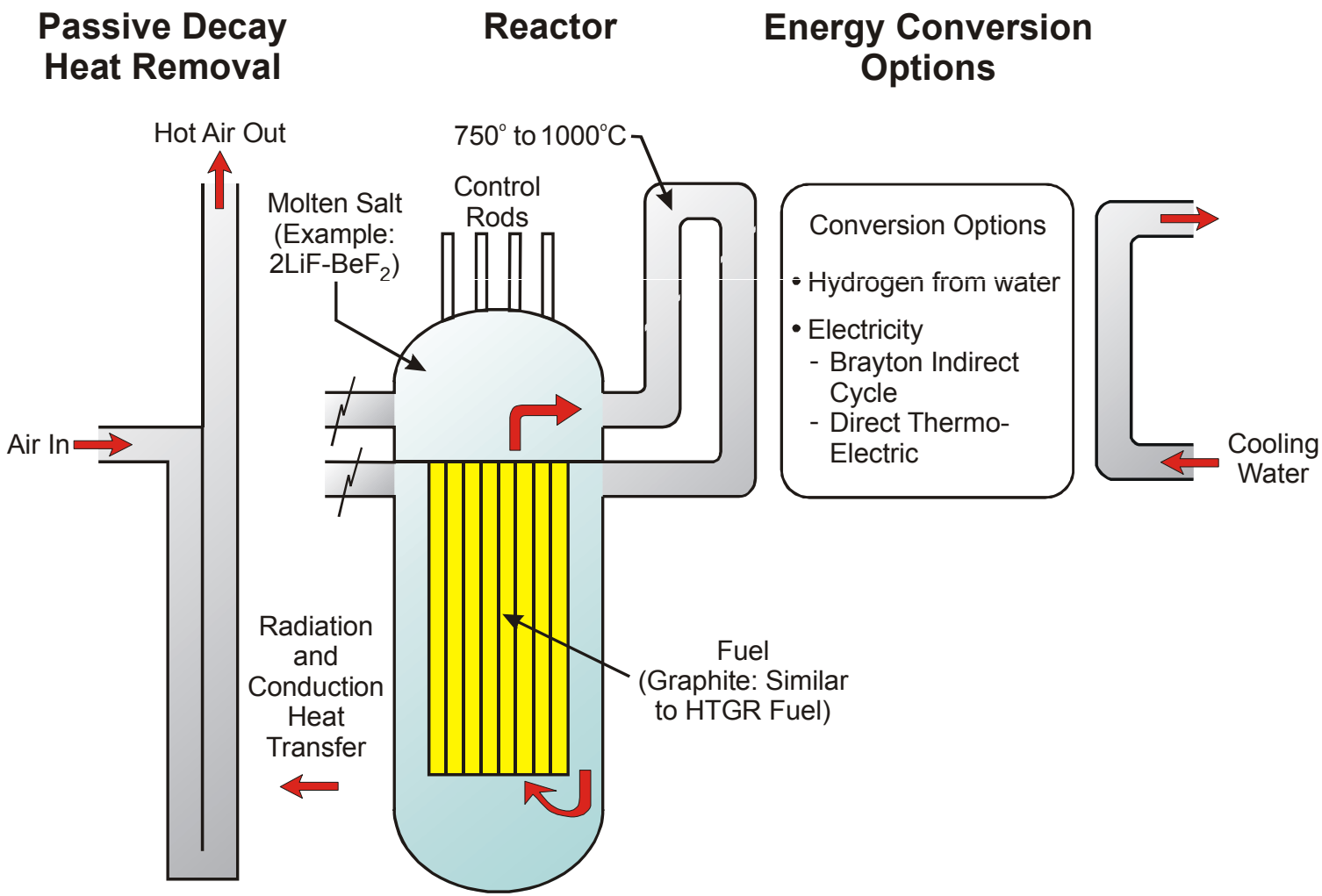

The AHTR Combines Two Technologies To Produce High-Temperature Heat

- **Coated-particle, graphite-matrix fuel**
  - Demonstrated temperature limit of ~1200ºC
  - Same fuel technology planned for modular high-temperature gas-cooled reactors
- **Molten fluoride salt coolant (examples: LiF/BeF_2, NaF/ZrF_4)**
  - Very low pressure (boils at ~1400ºC)
  - Efficient heat transfer
    - Similar to that of water
    - Significantly higher reactor coolant exit temperatures for the same fuel temperature limits compared with helium
  - Coolant for proposed fusion energy plants
  - Developed for the Aircraft Nuclear Propulsion Program

High-Temperature Engineering Test Reactor Fuel
(950ºC Helium Exit Temperatures; Japan)

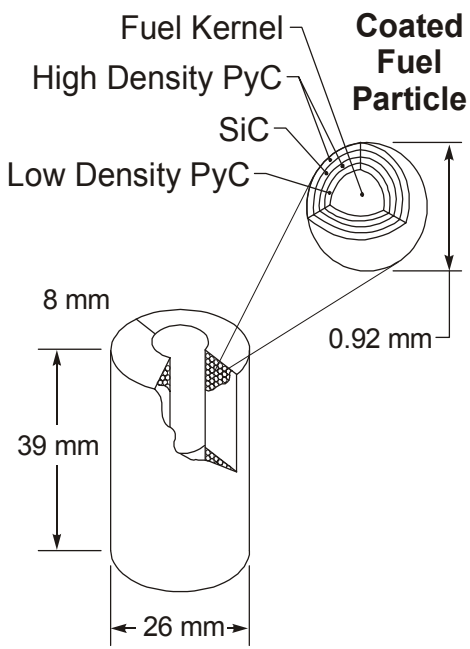

Fuel Compact

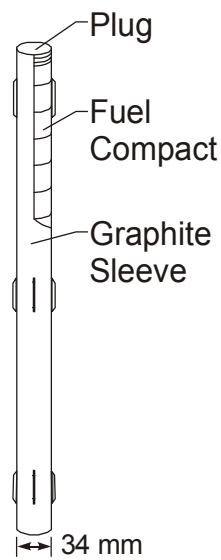

Fuel Rod

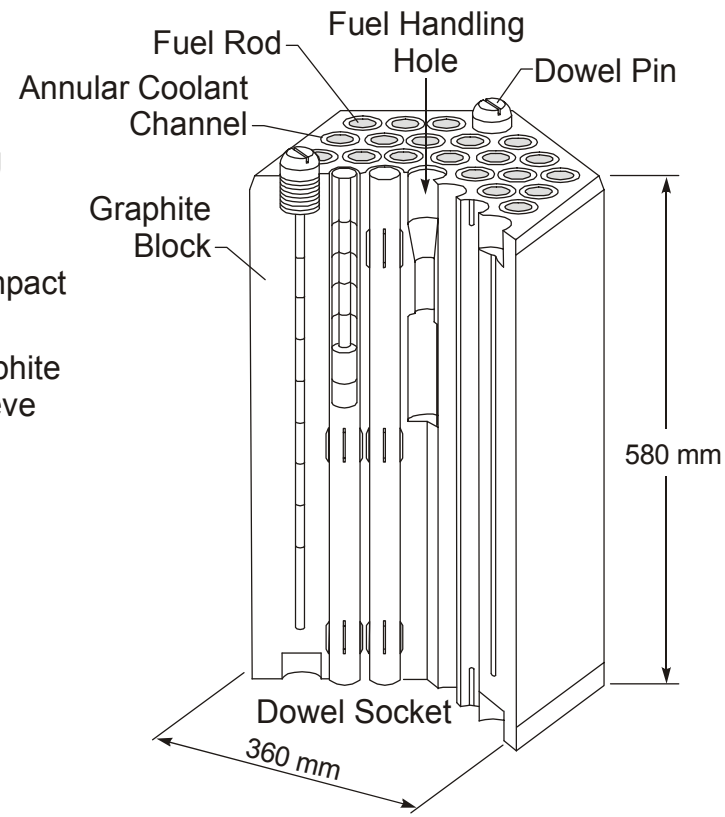

Fuel Block

Boiling Points of Alternative Reactor Coolants
(Molten Salts Allow Low-Pressure, High-Temperature Operations)

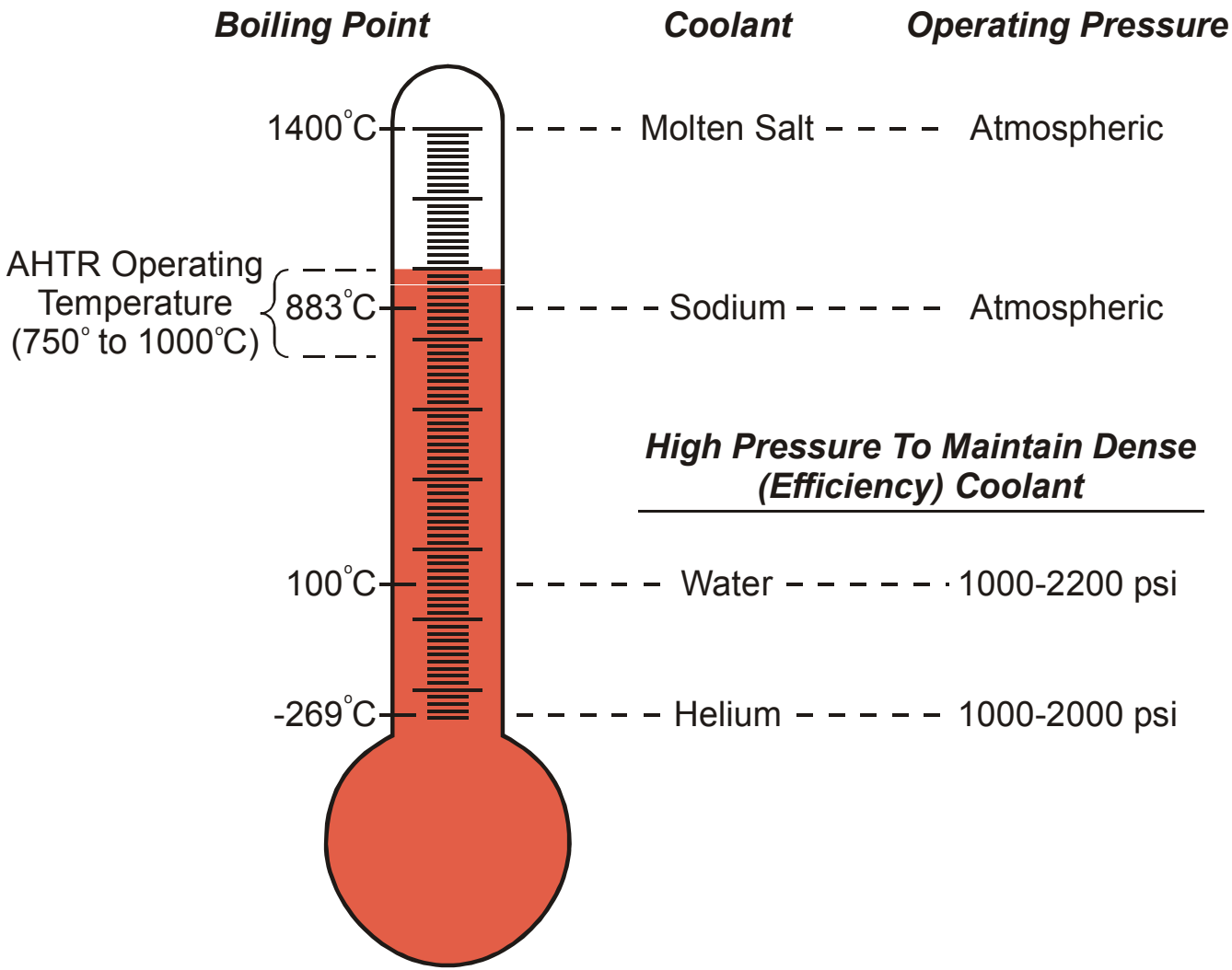

Low-Pressure Liquid Coolants Allow All the Heat To Be Delivered at High Temperatures

(Pumping Losses Restrict the Capability of Gas Coolants)

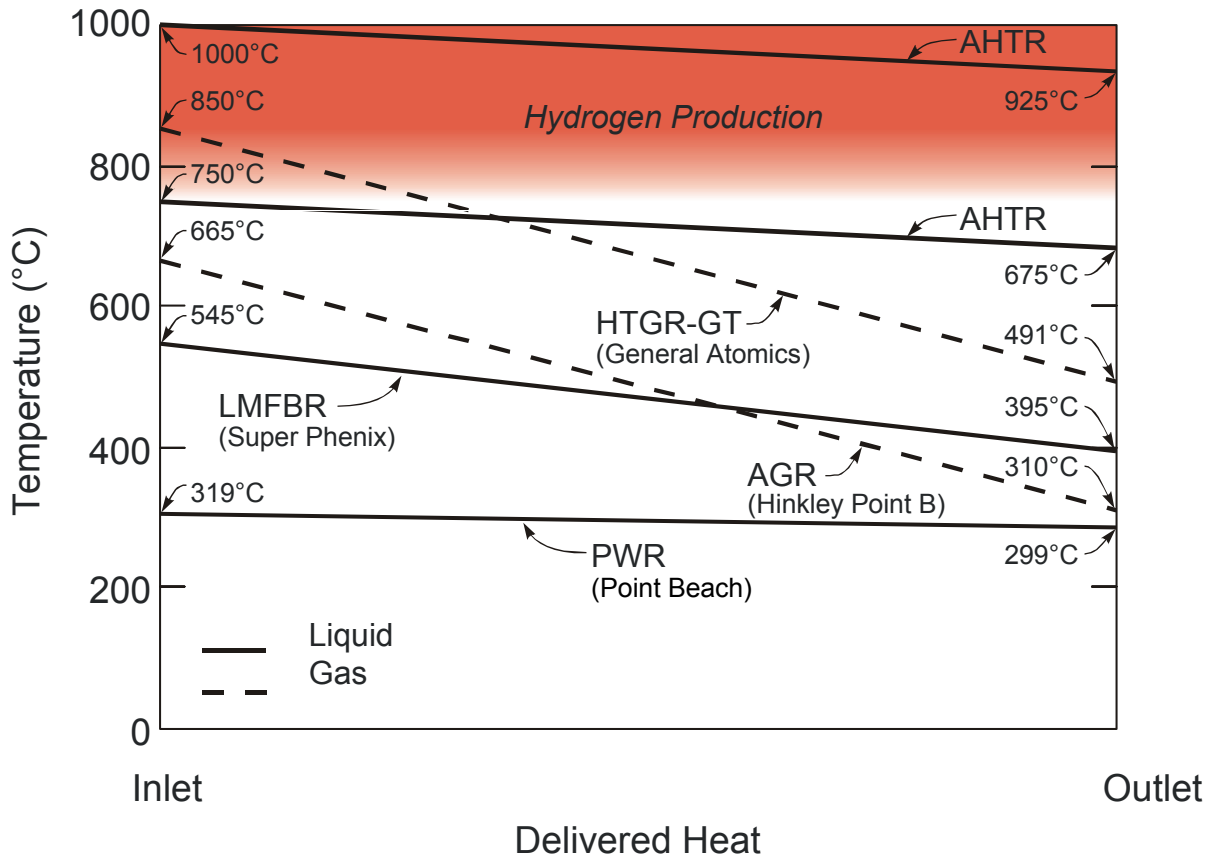

The Safety Case for the AHTR: Accident Control

- Low-pressure (subatmospheric) coolant
  - Escaping pressurized fluids provide a mechanism for radioactivity to escape from a reactor during an accident
  - Low-pressure (<1-atm) salt coolant minimizes accident potential for radioactivity transport to the environment
- Molten salt is a secondary barrier to prevent radionuclide releases to the environment (fission products and actinides dissolved in salt)
- Passive decay-heat-removal systems similar to those of proposed modular liquid-metal reactors

The AHTR and Proposed Modular Liquid-Metal Reactors Use the Same Decay-Heat-Removal Systems

Passive Decay Heat Removal

Reactor

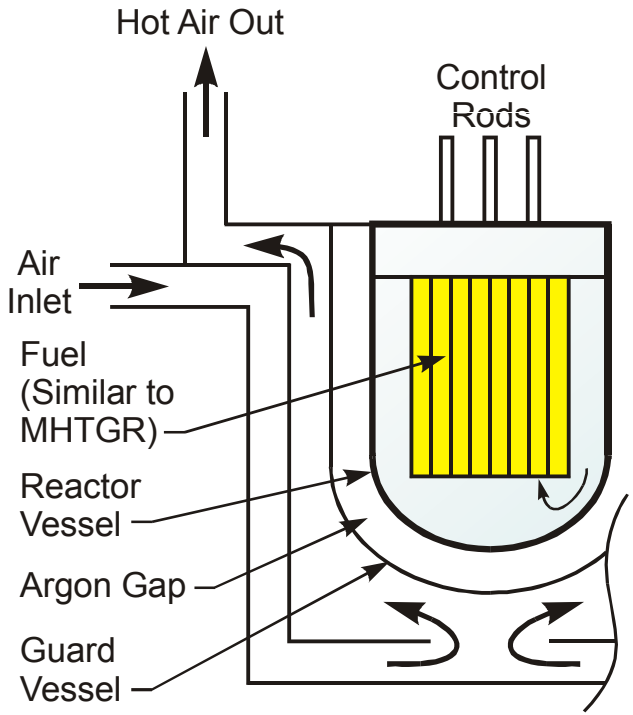

Decay-Heat Cooling System Characteristics

- Similar to GE S-PRISM (LMR)
- Argon Gap
  - Heat Transfer ~T^4
  - Thermal Switch Mechanism
- Heat Rejection Temperature Dependent
  - LMR: 500-550°C (~1000 Mw(th))
  - AHTR: 750-1000°C (>2000 Mw(th))

The Hydrogen-Nuclear Interface

Development of the Chemical Reactor for Hydrogen Production Is a Major Challenge

- Chemical reactor requirements
  - Transfer heat from nuclear system
  - Isolate reactor and chemical plant (both directions)
  - Drive chemical reactions
- Several options exist
  - Intermediate heat-transfer loop between reactor and chemical plant
  - Radiation heat exchanger
  - Other

Unique High-Temperature Requirements for Hydrogen Production May Require Unique Solutions

(Example: A Thermal-Radiation Heat Exchanger/Chemical Reactor for Heat Transfer, Independent Sizing of the Chemical Reactor, and Isolation)

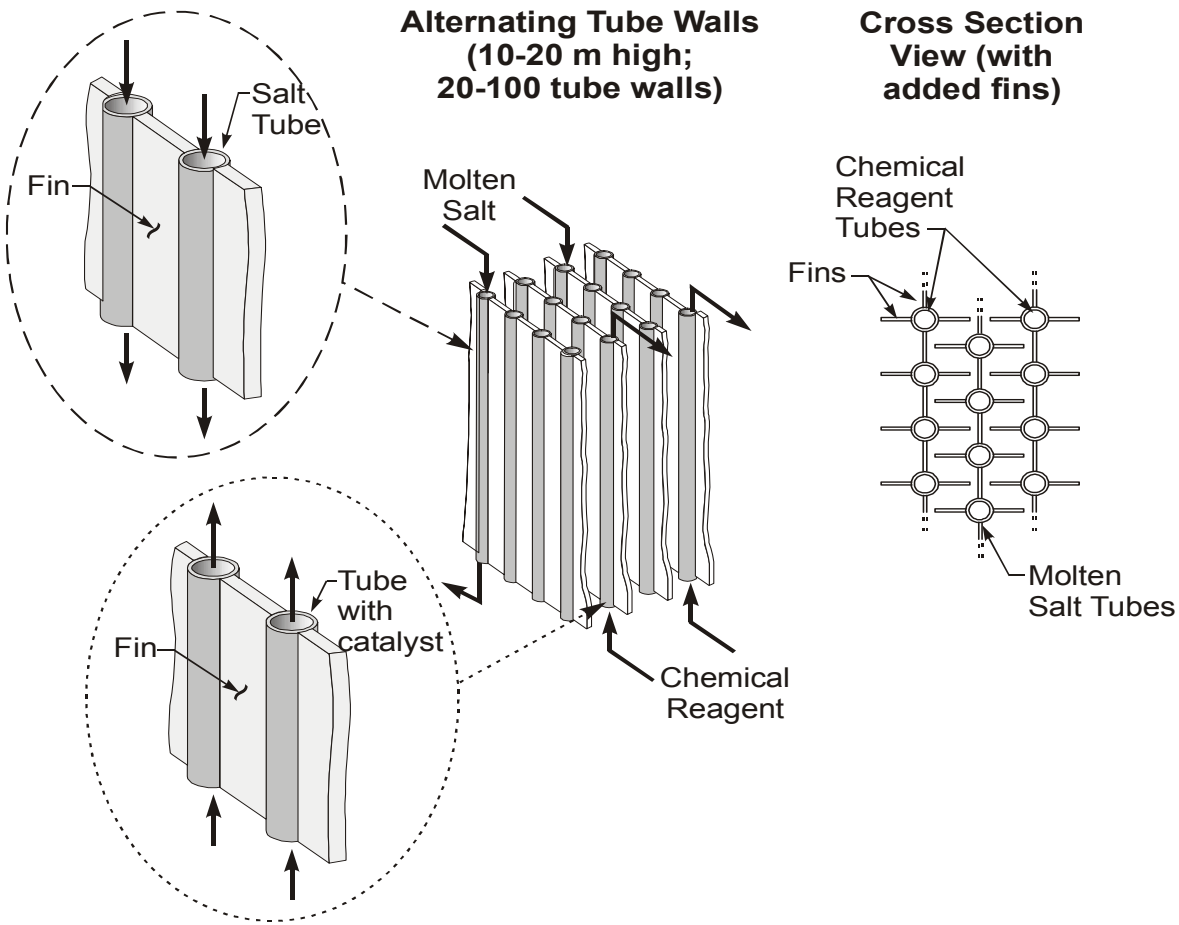

Conclusions

- Efficient H_2 production using nuclear energy places major demands on the reactor and the chemical plant
  - High temperature (>750°)
  - Isolation
  - Low pressure
- The Advanced High-Temperature Reactor is designed to match H_2 requirements
- Major R&D is required, and significant uncertainties exist