Nuclear Power Plant Implementation of a Johnson Noise Thermometer

Presented as part of the Joint U.S.—Korean Nuclear Energy Research Initiative Program

March 2002

David E. Holcomb
HolcombDE@ornl.gov

ORNL JNT Team

- David Holcomb - thermometry, nuclear plant implementation
- Roger Kisner - industrial electronic design
- Chuck Britton, Usha Jagadish - circuit design

Basic Johnson Noise System Components

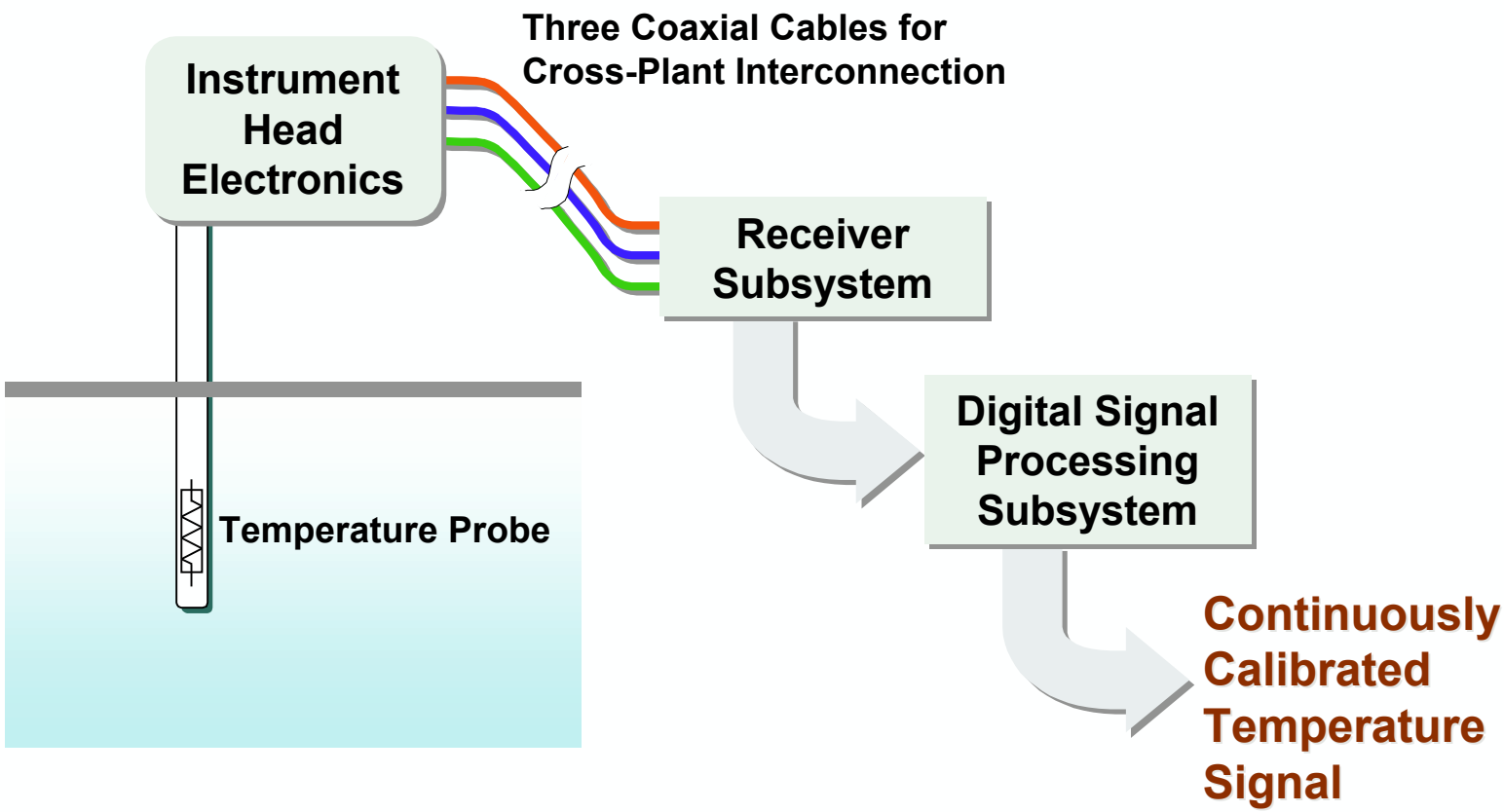

Two Temperature Measurement Methods Combine to Give One Accurate Value

Measurement Method	Positive Attribute	Negative Attribute
Resistance	• Fast Response • Industry standard	• Drift • Need to calibrate
Wideband Noise (Johnson)	• Fundamental temperature measurement • Needs no calibration	• Noise signal must be processed and integrated • Slow response

Unique System Formed by Several Technology Components

- **RTD Temperature measurement — *allows fast response to temperature change***
- **Fundamental noise signal from RTD provides continuous calibration of DC RTD value — *no drift***
- **Compensation by continuous AC calibration signal eliminates amplifier gain non-linearity and overall spectral response variation — *stability assured from preamp input to A/D converter***
- **Small electronics packages — *easy mounting, low power consumption, low cost, and high reliability***
- **Digital signal processing — removes plant, electronics, and interconnect noise and monitors instrument status**

JNT System Components

- Instrument Head
  - Resistance element and transmission line
  - Preamplifier circuit board
  - Shielded housing
- Coaxial Cable Interconnections (3)
- Receiver Subsystem
  - Filters
  - Mixers
  - A/D converters
- Real-Time DSP

Physics Behind the Measurement: a Resistance Generates Thermal Noise

- **Johnson noise is thermal noise**

$$\langle V^2 \rangle = 4 k_B T R \Delta f$$

$$d\overline{V^2} = \frac{4hf\,\mathrm{Re}(Z(f))}{e^{\frac{hf}{k_B T}} - 1} df$$

- **(Nyquist relation) … occurs in all conducting materials and is a consequence of random motion of electrons through a conductor. Each free flight of an electron, between collisions, constitutes a minute current.**
- **The sum of all these currents taken over a long period of time must be equal to zero. But their AC component is Johnson noise.**
- **JNT has been under development over 30 years**
  - **Applied in nuclear power applications**
  - **Can be inductively or directly measured**

We Analyze High Frequency Components of the Thermal Noise Spectrum

- Operating in 3 to 5 MHz range
- Away from plant EMI spectrum (most is under 1 MHz)
- Away from spectrums related to cable, amplifier, and other noise contributors
- Maintains wide spectral bandwidth for short integration times

JNT System Concept Diagram: Sensor Head

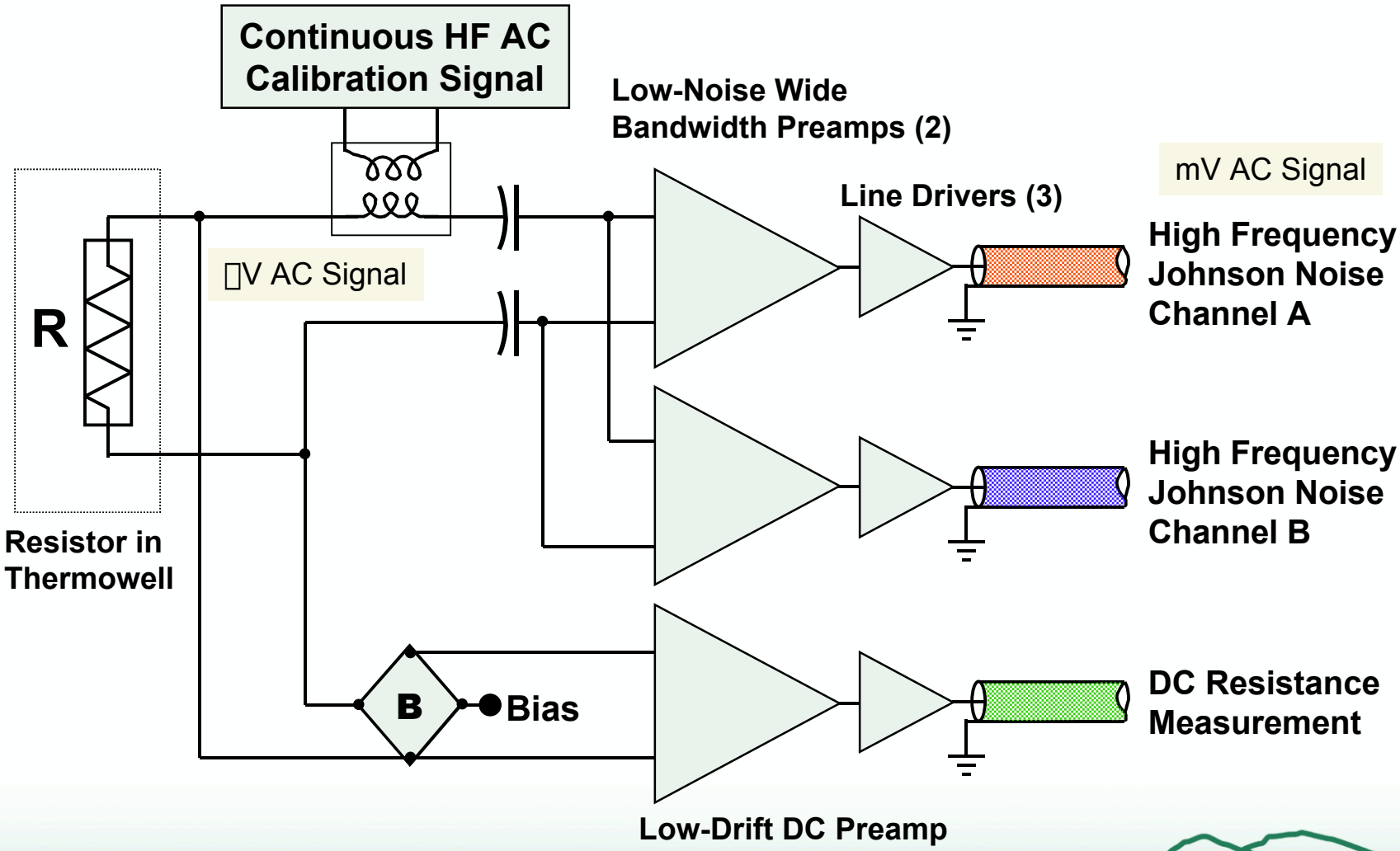

Preamplifier Circuit Board Supports Several Functions

- Low Noise Wide Bandwidth Johnson Noise Preamps (~2μV RMS for T=700K, R=1kΩ, Δf=100kHz)
- Two preamps for cross-correlation processing
- High Frequency AC Continuous Channel Calibration Signal
- Induction coupling of Channel Calibration Input
- Low Drift DC Preamp for Bridge Signal
- Bridge Balancing Network
- Voltage Regulators and Line Drivers
- Sensing resistor and electronics are Faraday shielded

Low-Noise Differential Split-Cascode Preamplifier Is a Proven Configuration

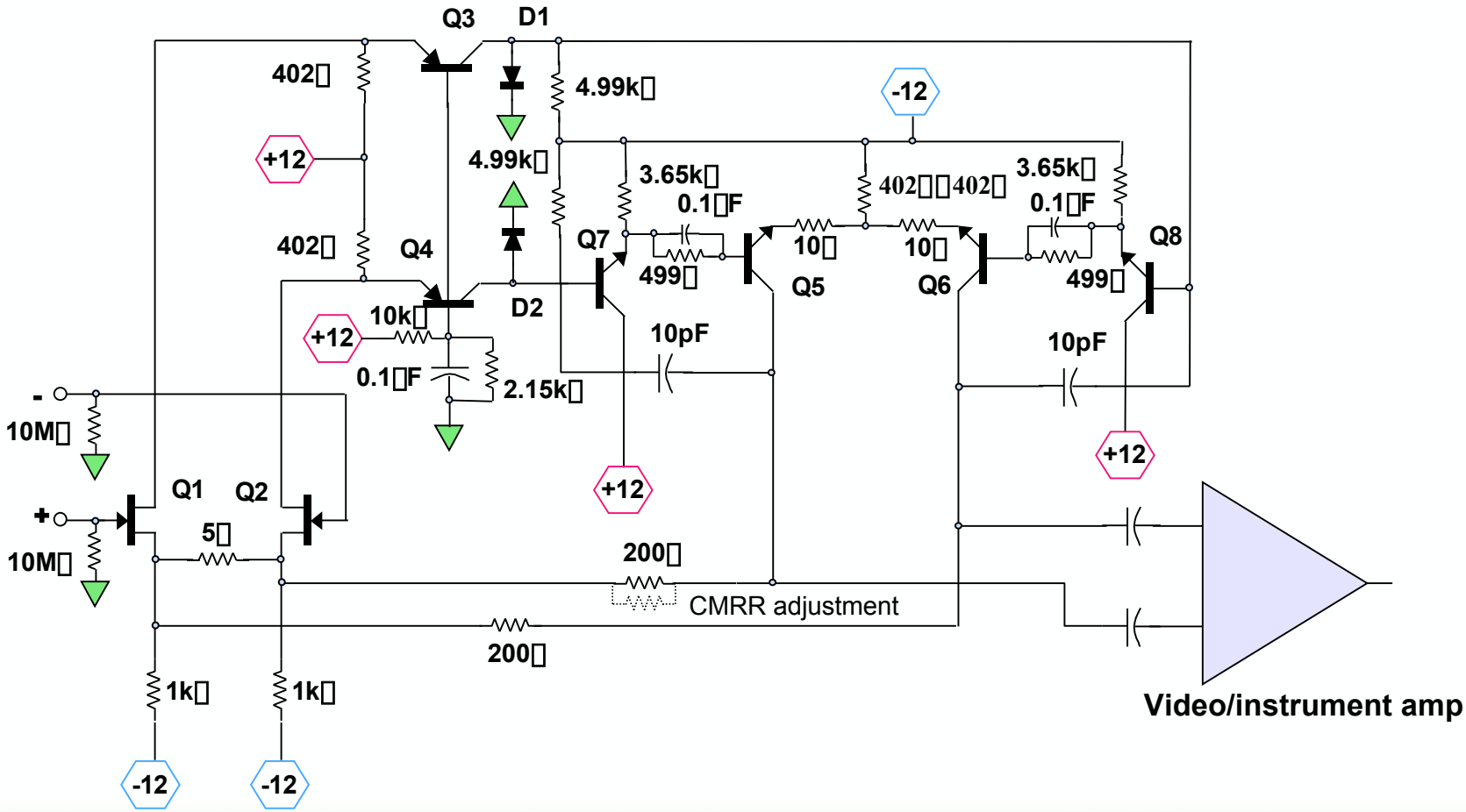

JNT System Concept Diagram: Receiver Subsystem

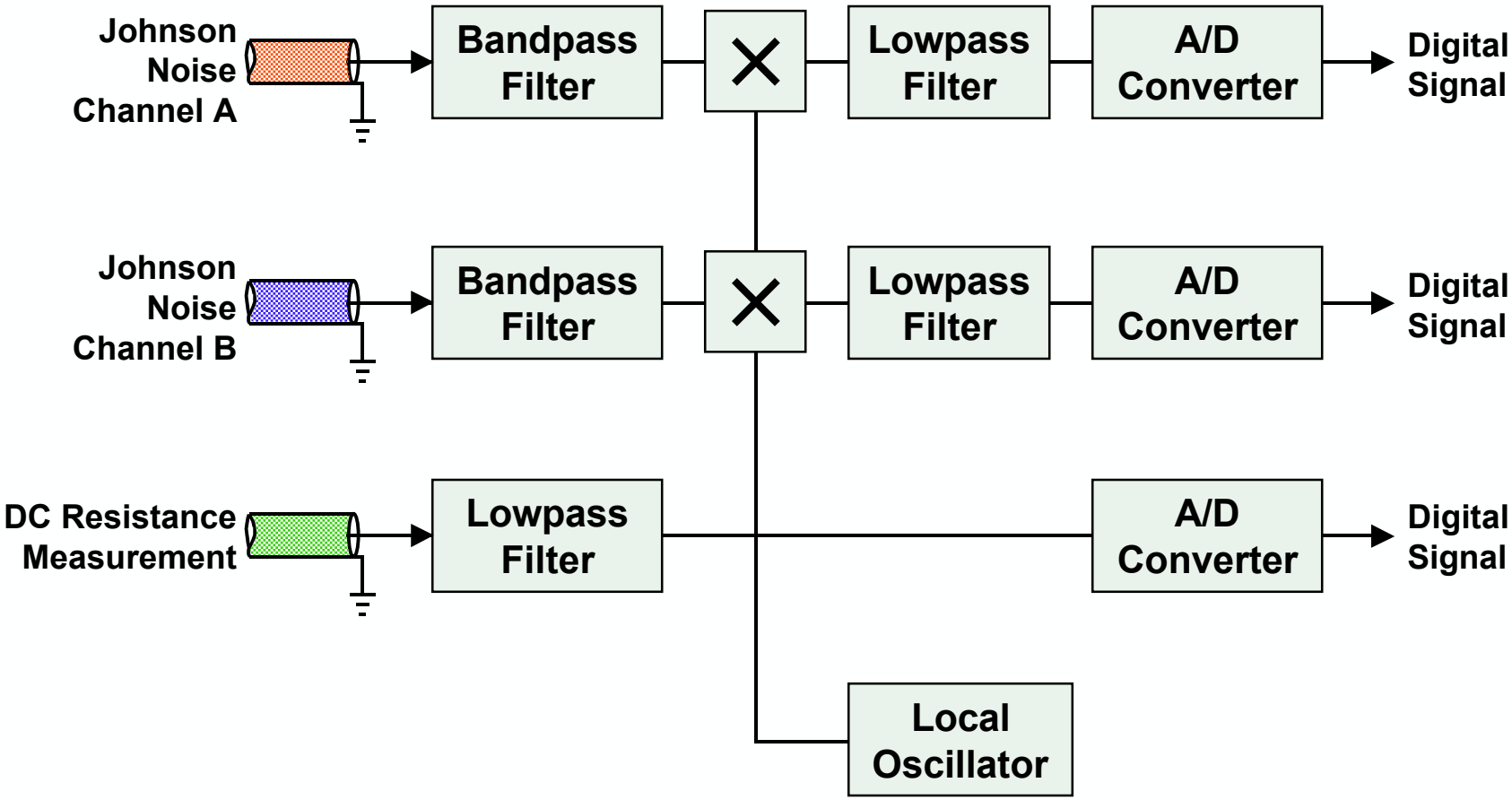

Receiver Subsystem Contains High-Frequency and DC Circuits

- **Johnson Noise Channels Mixer Circuit Board**
  - Two wideband amplifier channels
  - Anti-alias and low frequency rejection filtering (bandpass)
  - Multiplier (mixer shifts a 3 to 5 MHz, 100kHz bandwidth signal to baseband)
  - Lowpass filtering to further reject out-of-band noise
  - Additional gain (as needed for A/D input)
- **Local Oscillator** (must be stable)
- **DC Resistance Amplifier Circuit Board**
  - Noise filtering
  - Gain (as needed for A/D input)
- **A/D Converters** (three channels located in computer)
- **Power Supply**

Interconnection Coaxial Signal Cables Are Standard

- 3 cables required: Two HF noise and one DC voltage
- 10 MHz bandwidth on HF noise cables
- 50 Ohm characteristic impedance (standard)
- Power piggy-backed on HF signals
- Triboelectric and piezoelectric (microphonic) artifacts are eliminated by operating in the MHz spectrum
- Johnson noise is amplified and buffered to pass through long lengths of cable
  - Capacitance effects of cable are minimized
  - Signal levels are high (~1V peak)
  - Cable lengths of 300 meters (depending on line drivers)
  - Instrument head is enclosed in Faraday shield

Digital Signal Processing

- Calibrate Johnson noise channel
  - Extract continuous calibration signal
  - Apply non-linear gain correction to each noise channel using amplitude and harmonic spectral content of calibration signal
- Remove unrelated electromagnetic interference signals from Johnson noise signals
  - Cut spikes
  - Filter semi-periodic exogenous carriers
- Remove amplifier noise from resistance noise by cross-correlation
- Calculate absolute reference temperature from processed spectrum
- Periodically correct DC resistance measurement by applying absolute reference temperature

Temperature Uncertainty Is Reduced by Applying Johnson Noise and Other Synergistic Correction Factors

JNT System Feature	Uncertainty
1 Basic Resistance Measurement	5 Percent or more drift
2 Johnson Noise Calibration	1 Percent or less
3 Two-Channel Correlation	0.5 Percent or less
4 Two-Channel Gain Correction	0.3 Percent or less

BETTER

Johnson Noise Temperature Measurement Instrument for Reactor Coolant Leg

Target Specifications

- Temperature Measurement Range
  - 20 °C to 500 °C (limited by resistive material)
- Accuracy
  - 0.2%
- Power Requirements
  - Instrument head powered through coax cables
- Calibration
  - Completely self calibrating through Johnson noise reference
- Environmental Conditions
  - Instrument head ambient to 40 °C (limited by semiconductors)