Enhancement of coherence and intensity in a broad-area semiconductor laser array with injection locking

Y. Liu[1], G. Bitton[2], P. Cheinet[3], W. R. Garrett[1], H. K. Liu[1], and Y. Braiman[1]

[1]Center for Engineering Science Advanced Research
Computer Science and Mathematics Division
Oak Ridge National Laboratory, Oak Ridge, TN 37831-6355

[2]Glucon, K. Arye Petach-Tikva, Israel

[3]ESPCI, 10 rue Vauquelin, 75005 Paris, France

ABSTRACT

This paper describes a method of enhancing coherence and intensity of a broad-area laser array. An experimental scheme has been proposed to injection lock a single or multiple broad-area high-power lasers in a commercially available 19-laser array driven by a common current source. We experimentally demonstrate both the injection locking of each individual broad-area laser and the simultaneous injection of two broad-area lasers in a 19-laser array using a single-mode laser as the source of injection. The method and required conditions for the simultaneous locking of all 19 lasers have been discovered from the experimental results.

Keywords: laser diode array, broad-area laser, injection locking, phase locking, coherence, synchronization

1. INTRODUCTION

The need for high-power semiconductor laser sources has been considerably increasing in recent years because of potential application of high-power lasers to free-space optical communication, directed energy, and material processing.[1,2] Although broad-area lasers (and/or laser arrays) provide high-power output (on the order of tens of watts), high order transverse modes and an incoherent phase relationship among individual lasers largely deteriorate the beam quality and therefore limit the use of high-power lasers. To overcome this drawback, optical injection[3-10] and external cavity[11-14] techniques have been proposed. For example, injection locking of multiple stripe single-mode laser diode array with an overall array aperture of 100 μm ×1 μm and a total output power of less than 1.2W has been reported in the literature.[3-8] The injection locking of one single broad-area laser of an aperture up to 100 μm ×1 μm and a maximum output power up to 840 mW has also been demonstrated.[9,10]

In this paper, we describe a method of enhancing coherence and intensity of a broad-area laser array based on the injection locking. Experiments have been conducted on a commercially available broad-area 19-laser array (see Fig. 1). Each broad-area laser in the array has a cavity length of 1 mm and an emitting aperture of 150 μm×1 μm and is capable of emitting a maximum output power over 1W. The separation between any two adjacent lasers in the array is 500 μm and the total length of the array is 1 cm. The laser array is driven with a common current source. Our experimental design makes it possible to address each laser separately in the array. We experimentally demonstrate both injection locking of each individual broad-area laser and simultaneous injection of two broad-area lasers in a 19-laser array using a single-mode laser as the source of injection. The constant phase relationship between the injection-locked lasers suggests the possibility of achieving high intensity laser output by coherently coupling the broad-area lasers. The influence of the frequency matching between the injection light and the slave laser as well as the locking range have been investigated, which heuristically indicates that there might be a way to synchronize the whole broad-area laser array with injection locking.

2. EXPERIMENTAL SETUP

A schematic of experimental setup is shown in Fig. 1. A broad-area Coherent B1-20C 19-laser diode array is used in the experiment. As illustrated in the inset of Fig. 1, each broad-area laser in the array has an emitting aperture of 150 μm×1 μm and the separation between two adjacent lasers in the array is 500 μm. The overall aperture 1 cm ×1 μm of the laser array emits a far-field pattern subtended by 6°×50°. We use two cylindrical lenses (L1 and L2) with appropriate focal lengths to collimate the output beam from the laser array.

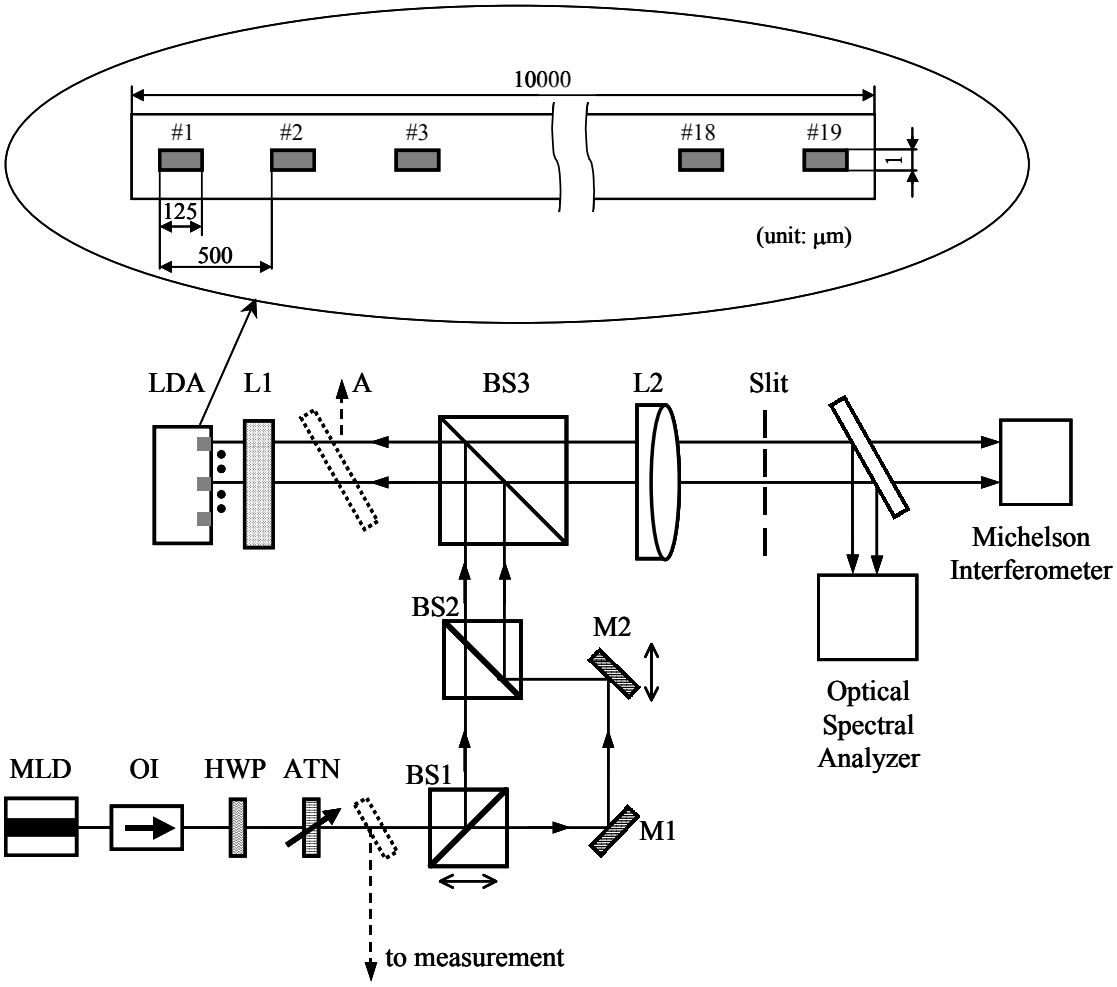

Fig. 1 Schematic of experimental setup. LDA: laser diode array, LDM: injection laser diode, L1: fast-axis cylindrical lens, L2: slow-axis cylindrical lens, OI: optical isolator, HWP: half-wave plate, ATN: optical attenuator, BS: beam splitter. Inset: configuration of the 19-laser array.

The single-mode master laser used in this experiment is a wavelength-tunable laser diode (TOPTICA DL-100) with a line width of a few MHz and a maximum output power of 100 mW. The wavelength is tunable between 800 and 810 nm with an external grating. An optical isolator with an isolation of 60 dB is used to block the light reflecting back into the master laser. An optical attenuator and a half-wave plate are used to respectively adjust the power and the polarization of the injection light. Since the separation between adjacent lasers in the array is 500 μm and the emitting width of each laser is 125 μm, to achieve an efficient injection, we need to direct the injection beam into each laser separately. As a

basic step, we split the injection light into two parallel beams with two sets of mirrors and beam-splitters as shown in Fig. 1. The spot size of the injection beam in front of the laser array is calculated to be about 100×10 μm. By shifting BS1 and M2 with translation stages, one can selectively direct the injection beams into any selected pair of lasers in the array. The light output of the laser array passes through the collimation lenses L1 and L2 and is selected by a thin slit. The spectrum of each broad-area laser was measured with an optical spectral analyzer (Agilent 86140B).

3. EXPERIMENTS ON SINGLE LASER INJECTION LOCKING

We have measured the optical spectrum of all 19 lasers in the free-running state. Figure 2 shows an example of the spectrum distribution of all 19 lasers at the drive current I_d=11 A. The vertical bars in Fig. 2 represent the experimentally measured wavelength span of lasers at the free-running state. Here, the wavelength span is defined as a range of wavelengths within 10 dBm of the peak wavelength. From Fig. 2, we found that: (1) the spectrum ranges of 19 broad-area lasers are different from each other, which indicates a large inhomogeneity of the laser array; (2) each broad-area laser has multiple longitudinal modes and the mode separation is measured to be about 0.08 nm.

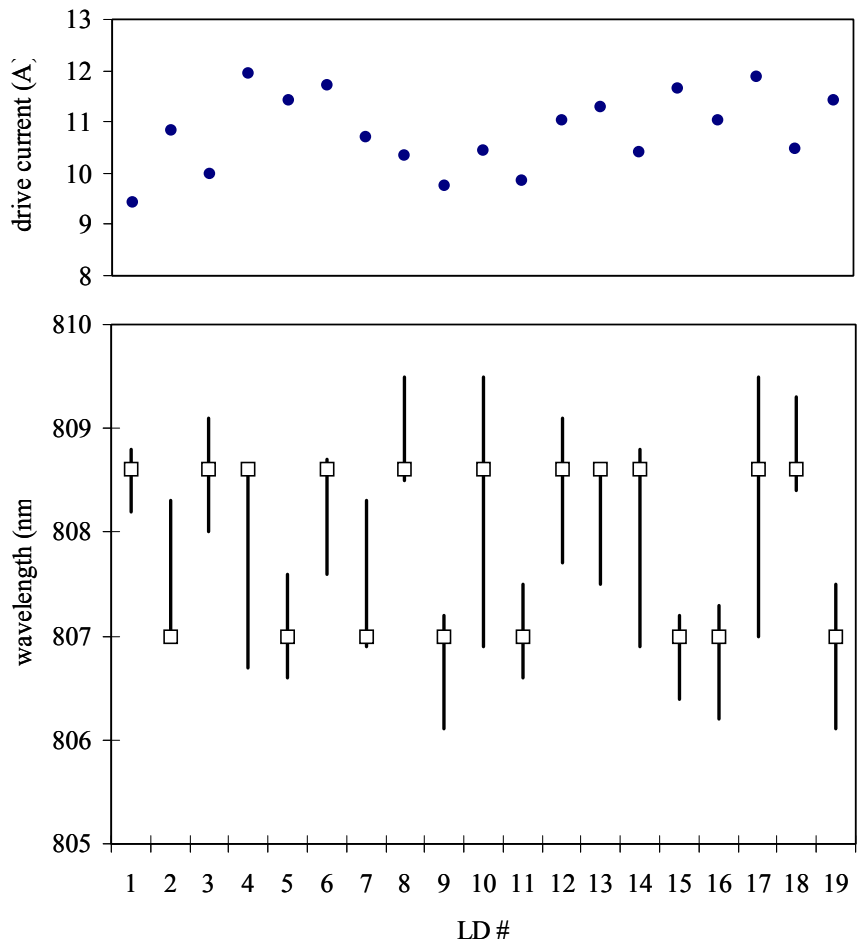

Fig. 2 Wavelength span of all 19 lasers in the array. Rectangle marks are injection wavelengths to which each laser was locked and black dots represent the drive currents when the optimum injection locking occurs.

Optical injection has been conducted for all 19 lasers. In our experiment, the injection locking is obtained only when the injection light frequency matches one of the longitudinal modes of the slave laser. Frequency matching between the

slave laser in the array and the master laser can be achieved by adjusting the drive current of the array. The dependence of the wavelength on the drive current was found to be 0.03 nm/A and the drive current could be tuned with an accuracy of 0.01 A. We have successfully injection locked all 19 lasers individually by appropriately matching the frequency between the slave laser and the master laser. The rectangles in Fig. 2 show the injection wavelengths at which each individual laser was locked. Here, two injection wavelengths: 807 nm and 808.6 nm are employed as injection wavelengths. The optimum drive currents for each broad-area laser are plotted as black dots at the top of Fig. 2.

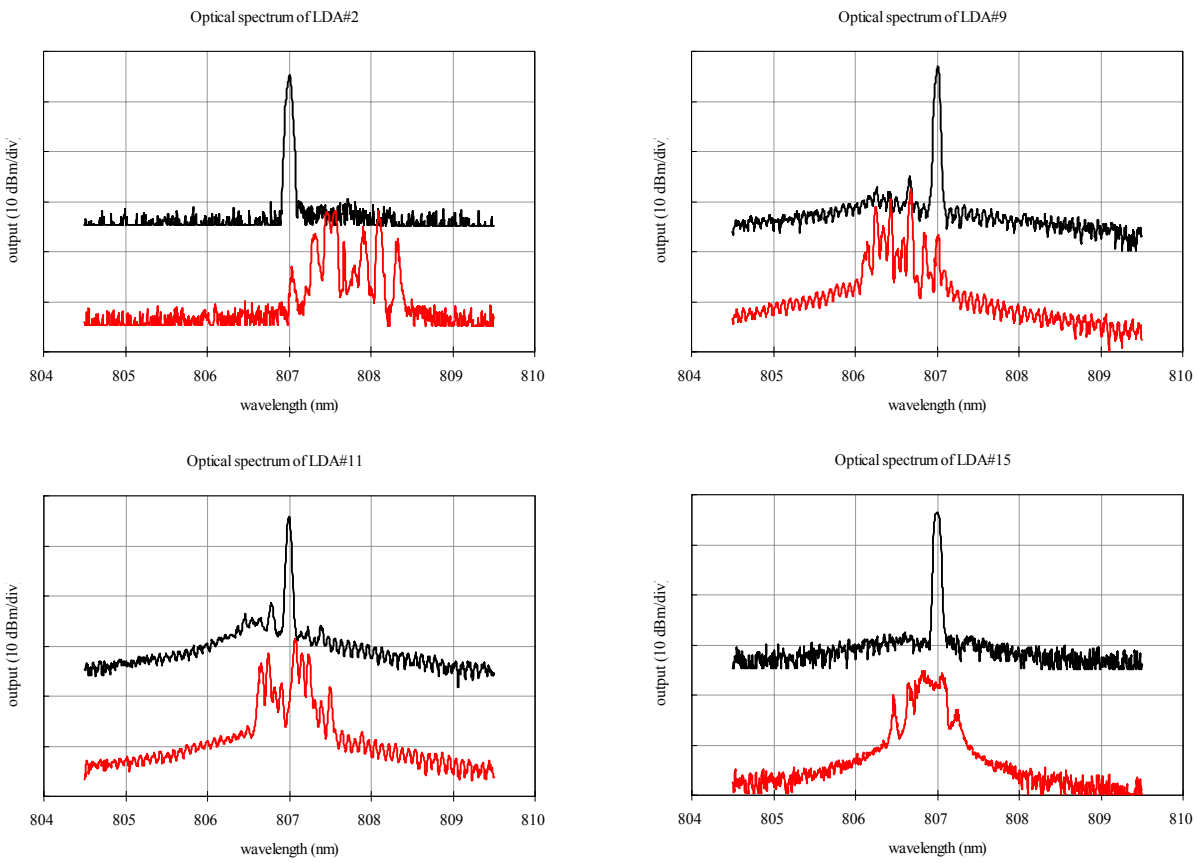

Fig. 3 Experimentally measured injection locking of individual broad-area lasers shown in Fig. 2. Lower trace: spectrum of free-running laser, upper trace: spectrum of injection-locked laser. The lower and upper traces are plotted with the same scale.

Some typical examples of the injection locking are plotted in Fig. 3. It is clearly demonstrated that the broad spectrum of the broad-area laser is locked to a narrow single frequency as a result of injection. We measured the spectrum bandwidth of the injection-locked lasers with a super cavity and the results show that the injection-locked laser has the similar spectrum bandwidth to the injection light. The output power of each broad-area laser ranges from 100 to 200 mW in this case. It is noted that there is no significant change in the light output power of the lasers with or without the injection locking.

4. SIMULTANEOUS INJECTION LOCKING OF TWO BROAD-AREA LASERS

Based on the above results, we attempted the simultaneous injection locking of a pair of broad-area lasers by first looking for a pair of lasers whose longitudinal modes are close to each other in the free-running state. Then we set the

injection light frequency to be close to a certain main longitudinal mode in the two slave lasers. The fine tuning of the frequency matching between the slave laser and the injection light is accomplished by adjusting the drive current of the slave laser array. In this way, we were successful in the simultaneous injection locking of several pairs of lasers in the array. A typical example of simultaneous injection locking of LD#4 and LD#7 is shown in Fig. 4. The injection light wavelength is 808.15 nm and the drive current of the laser array is 10.0 A. In each case, each pair of lasers is simultaneously locked to the same injection frequency.

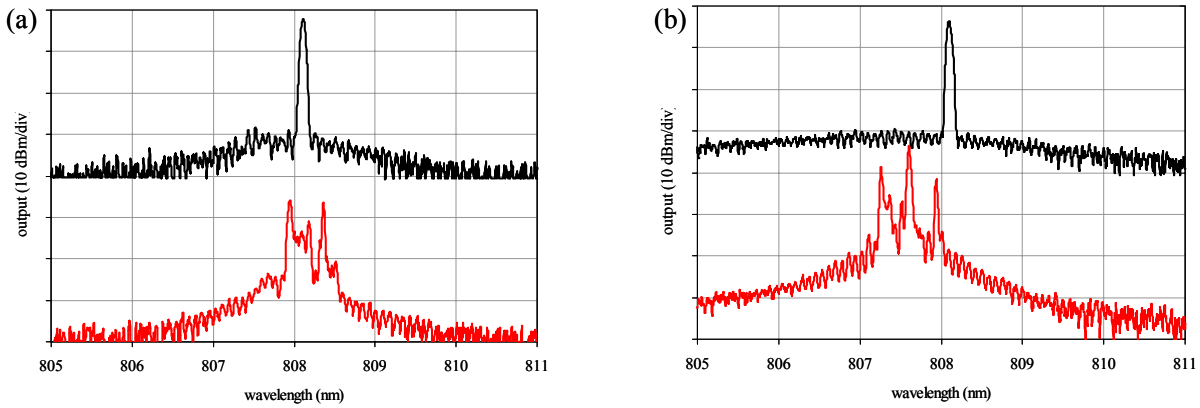

Fig. 4 Optical spectrum of (a) LD#4 and (b) LD#7 before (lower trace) and after (upper trace) the injection locking. The spectrum after the injection locking is vertically shifted for better exhibition. The lower and upper traces are plotted with the same scale.

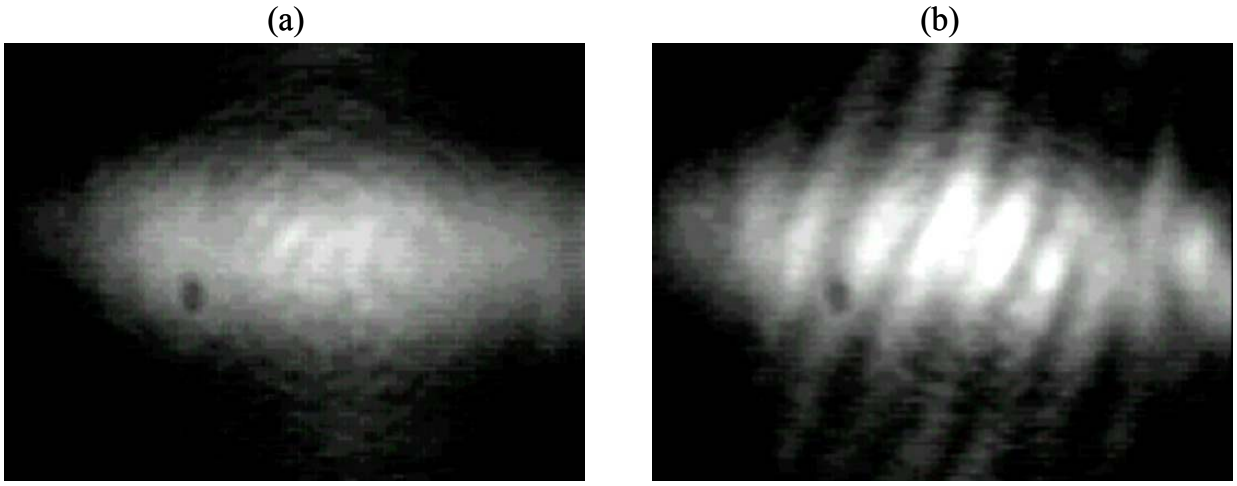

Fig. 5 Interference pattern between LD#4 and LD#7 before (a) and after (b) the injection locking.

To verify the constant phase relationship between the locked lasers, we measured the interference between the two injected laser outputs with a Michelson interferometric setup. The results are shown in Fig. 5. A clear interference pattern is obtained when the two lasers are injection locked. We have also investigated the influence of the reflection of the injection light from the facet of the laser array on the interference pattern. We found that a 3% change of the drive current of the slave laser from its optimum value will completely destroy the interference pattern. This fact clearly indicates that the observed interference pattern is only due to the light outputs of the injection-locked broad-area lasers.

The constant phase relationship is very important to the coherent coupling of lasers to form a high intensity light source.[15]

5. DISCUSSIONS

Injection locking of a broad-area laser depends mainly on two issues: (1) wavelength matching between the injection frequency and one of the longitudinal modes of the broad-area laser in the free-running state, and (2) injection power needed to achieve mode locking. These two issues are further related to each other as shown in Fig. 6. Note that the injection strength is defined as the square root of the injection power measured after the attenuator in Fig. 1. In general, the locking frequency range is linearly dependent on the injection strength. We observed that the injection-locking domain is not symmetrical with respective to the frequency detuning. Such property is due to the line width enhancement factor of the semiconductor laser as discussed in the injection characteristics of single-mode laser diodes. [16]

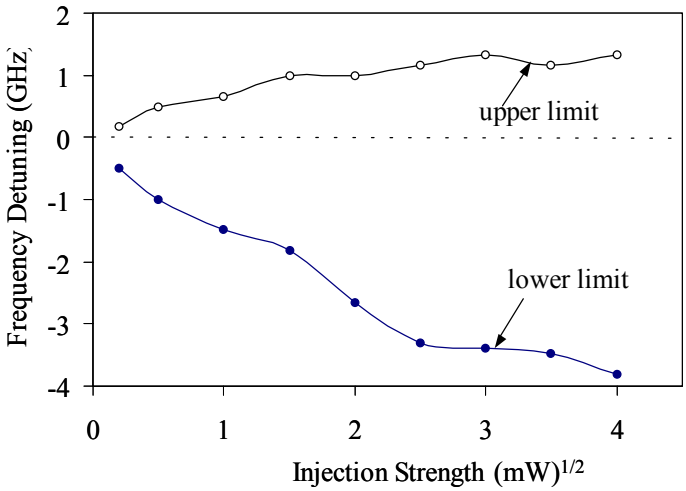

Fig. 6 Injection-locking range versus the injection strength.

We found that a laser with the output power up to 1 W can be injection locked with the injection power of 0.5 mW. Therefore, it is possible to lock a broad-area laser array with each individual laser output power up to one watt using a single longitudinal mode light. The problem of wavelength matching between the injection and the slave lasers can be solved by using a more homogeneous laser array or by using an array of lasers in which each individual laser diode can be driven separately. Research in this direction is in progress.

6. SUMMARY

In conclusion, we have proposed a method of enhancing coherence and intensity of a broad-area high-power laser array via optical injection locking. We have experimentally demonstrated both the injection locking of each individual broad-area laser and the simultaneous injection of two broad-area lasers in a 19-laser array using a single-mode laser as the source of injection. The influence of the frequency matching between the injection frequency and the slave laser and the injection power on the injection performance have been investigated, which revealed the necessary conditions for the simultaneous locking of 19 lasers. Our experiments suggest the feasibility of achieving high intensity diffraction limited coherent radiation from an array of broad-area lasers. The results are very important in the practical application of the injection locking technology to high-power broad-area lasers.

ACKNOWLEDGMENTS

Helpful discussions with J. Barhen and E. Garmire are kindly acknowledged. This research was supported in part by the U.S. Department of Energy, Office of Basic Energy Sciences, and by the Office of Naval Research. The Oak Ridge National Laboratory is managed for the U.S. DOE by UT-Battelle, LLC, under contract No. DE-AC05-00OR22725.

REFERENCES

1. D. Botez and D. R. Scifres, *Diode Laser Arrays*, Cambridge University Press, 1994.
2. N. W. Carlson, *Monolitic Diode-Laser Arrays*, Springer-Verlag, 1994.
3. L. Goldberg, H.F. Taylor, and J.F. Weller, "Injection locking of coupled-stripe diode laser arrays," *Appl. Phys. Lett*. **46**, pp. 236-238, 1985.
4. G. L. Abbas, S. Yang, V. W. S. Chan, and J. G. Fujimoto, "Injection behavior of high-power broad-area diode lasers," *Opt. Lett*. **12**, pp. 605-607, 1987.
5. M. K. Chun, L. Goldberg, and J. F. Weller, "Injection-beam parameter optimization of an injection-locked diode-laser array," *Opt. Lett*. **14**, pp. 272-274, 1989.
6. S. MacCormack, J. Feinberg, and M. H. Garrett, "Injection locking a laser-diode array with a phase-conjugate beam," *Opt. Lett*. **19**, pp. 120-122, 1994.
7. H. Tsuchida, "Tunable, narrow-linewidth output from an injection-locked high-power AlGaAs laser diode array," *Opt. Lett*. **19**, pp. 1741-1743, 1994.
8. L. Bartelt-Berger, U. Brauch, A. Giesen, H. Huegel, and Hans Opower, "Power-scalable system of phase-locked single-mode diode lasers," *Appl. Opt*. **38**, pp.5752-5760, 1999.
9. H. Horiuchi, T. Shimura, T. Omatsu, O. Matoba, K. Kuroda, "Narrow bandwidth operation of high-power broad-area diode laser using cascaded phase-conjugate injection locking," *Appl. Phys. B* **68**, pp. 1021-1025, 1999.
10. T. Pawletko, M. Houssin, M. Knoop, M. Vedel, F. Vedel, "High power broad-area diode laser at 794 nm injected by an external cavity laser," *Optics Commun*. **174**, pp. 223-229, 2000.
11. M. Lobel, P. M. Petersen, and P. M. Johansen, "Tunable single-mode operation of a high-power laser-diode array by use of an external cavity with a grating and a photorefractive phase-conjugate mirror," *J. Opt. Soc. Am. B* **15**, pp. 2000-2005, 1998.
12. V. V. Apollonov, S. I. Derzhavin, V. V. Kuzminov, D. A. Mashkovskii, A. M. Prokhorov, V. N. Timoshkin, and V. A. Filonenko, "Phase-locking of a linear array of high-power laser diodes," *Quantum Electronics* **29**, pp. 839-841, 1999.
13. V. Daneu, A. Sanchez, T.Y. Fan, H.K. Choi, G.W. Turner, and C.C. Cook, "Spectral beam combining of a broad-stripe diode laser array in an external cavity," *Opt. Lett*. **25**, pp.405-407, 2000.
14. B. Chann, I. Nelson, and T. G. Walker, "Frequency-narrowed external-cavity diode-laser-array bar," *Opt. Lett*. **25**, 1352-1354, 2000.
15. Y. Braiman, T. A. B. Kennedy, K. Wiesenfeld, and A. Khibnik, "Entrainment of solid-state laser arrays," *Phys. Rev. A* **52**, pp. 1500-1506, 1995.
16. J. M. Liu and T. B. Simpson, "Four-wave mixing and optical modulation in a semiconductor laser," *IEEE J. Quantum Electron*. **30**, pp. 957-965, 1994.