Stable Frequency Locking of Broad-Area Lasers By Optical Injection

Y. Liu, H. K. Liu, and Y. Braiman

Center for Engineering Science Advanced Research
Computer Science and Mathematics Division
Oak Ridge National Laboratory
Oak Ridge, TN 37831-6355

Abstract

Simultaneous frequency locking of two broad-area laser diodes in a high-power laser bar is experimentally demonstrated using optical injection. The interference between the injection-locked lasers is verified, and the visibility of the fringe shows a sensitive dependency on the frequency detuning.

Broad-area lasers received considerable attention due to their compactness, low cost, and high efficiency. However, poor beam quality and wide spectrum (that is characteristic to broad area lasers) significantly limits their applicability. To overcome this drawback, optical injection [1-3] and external cavity [4-5] techniques have been proposed. In this work, we report experimental results on the simultaneous injection locking of pairs of broad-area lasers in an array driven by a common current source. We obtained a single-mode behavior and constant phase relationship of different pairs of semiconductor lasers. The frequency and phase locking are verified from the interference pattern from the injection-locked lasers.

A scheme of a broad-area laser array with light injection is demonstrated in Fig. 1. Our laser array (Coherent B1-20C) has 19 In GaAsP broad-area laser diodes with total output power over 20 W. Each broad-area laser in the array has a cavity length of 1 mm and an emitting aperture of 150 μm×1 μm. A single diode is capable of emitting a maximum output power over 1 W. The spectrum of each laser is distributed between 805 and 810 nm with a bandwidth of about 2 nm. For the drive current above its threshold, each broad-area laser in the array exhibits multiple longitudinal modes with the mode separation around 0.083 nm. The overall aperture, 1 cm ×1 μm of the laser array, emits a far-field pattern subtended by 6°×50°. The single-mode master laser used in this experiment is a wavelength-tunable laser diode (TOPTICA DL-100) with a line width of 1 MHz and a maximum output power of 100 mW. Since the separation between adjacent lasers in the array is 500 μm and the emitting width of each laser is 125 μm, to achieve an efficient injection, we need to direct the injection beam into each laser separately. As a basic step, we split the injection light into two parallel beams with two sets of mirrors and beam-splitters as shown in Fig. 1. The spot size of the injection beam in front of the laser array is calculated to be about 100×10 μm. By shifting BS1 and M2 with translation stages, one can selectively direct the injection beams into any selected pair of lasers in the array.

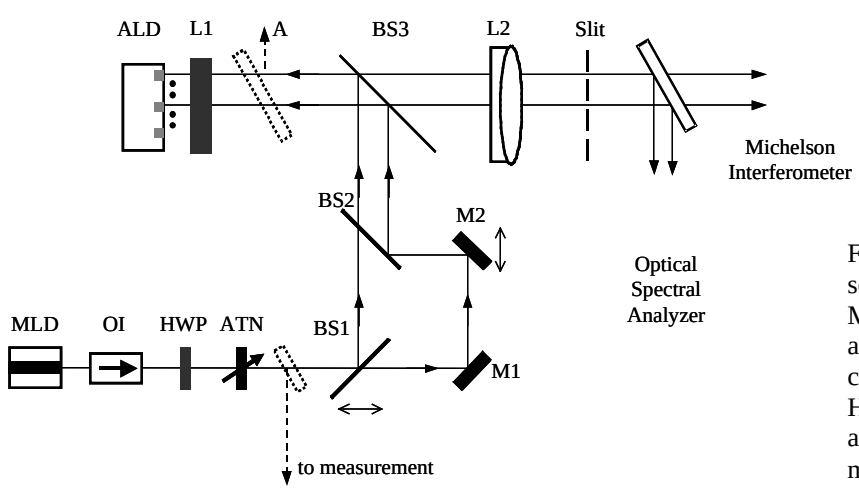

Fig. 1 Schematic experimental setup: ALD: array laser diode, MLD: master laser diode, L1: fast-axis cylindrical lens, L2: slow-axis cylindrical lens, OI: optical isolator, HWP: half-wave plate, ATN: attenuator, BS: beam splitter, M: mirror.

It is found that the injection locking is obtained when the injection light frequency matches one of the longitudinal modes of the slave laser. The frequency matching between the slave laser in the array and the master laser can be achieved by adjusting the drive current of the array. We verified that a broad-area laser with the output power over 1 W can be locked to a single mode with the injection power less than 1 mW [6]. By appropriately tuning the drive current of the laser array to optimize the optical frequency detuning between the injection and the slave lasers, we have achieved the simultaneous injection locking of several pairs of lasers in the array [7]. To show the stable phase-locking between the locked lasers, we measured the interference between the two injected laser outputs with a Michelson interferometric setup. A clear interference pattern is obtained when the two lasers are injection locked. We vary the drive current of the laser array from the optimum point and investigate the variation of the interference pattern. Fig. 2 shows the measured visibility of the interference fringe as a function of the frequency detuning. One observes a sensitive dependency of the visibility on the frequency detuning as expected. The result also clearly indicates that the observed interference pattern is only due to the light outputs of the injection-locked broad-area lasers rather than the reflection of the injection light from the laser array facet. The asymmetric distribution in Fig. 2 is related to the locking characteristics of a semiconductor laser [8].

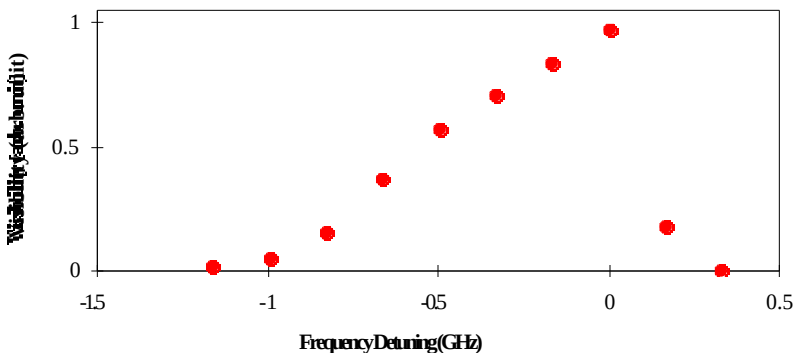

Fig.2 Visibility of the interference pattern between two locked lasers as a function of frequency detuning.

In conclusion, simultaneous injection locking of two broad-area lasers in a large aperture laser array has been experimentally demonstrated and the stable phase locking has been experimentally verified.

This research was supported in parts by the U.S. Department of Energy, Office of Basic Energy Sciences, and by the Office of Naval Research. The Oak Ridge National Laboratory is managed for the U.S. DOE by UT-Battelle, LLC, under contract No. DE-AC05-00OR22725.

References

[1] L. Goldberg, H.F. Taylor, J.F. Weller, “Injection locking of coupled-stripe diode laser array,” Appl. Phys. Lett., Vol. 46, 236-238 (1985).

[2] H. Horiuchi, T. Shimura, T. Omatsu, O. Matoba, K. Kuroda, “Narrow bandwidth operation of high-power broad-area diode laser using cascaded phase-conjugate injection locking,” Appl. Phys. B, Vol. 68, pp. 1021-1025 (1999).

[3] T. Pawletko, M. Houssin, M. Knoop, M. Vedel, F. Vedel, “High power broad-area diode laser at 794 nm injected by an external cavity laser,” Optics Commun. Vol. 174, pp. 223-229 (2000).

[4] V. Daneu, A. Sanchez, T.Y. Fan, H.K. Choi, G.W. Turner, and C.C. Cook, “Spectral beam combining of a broad-stripe diode laser array in an external cavity,” Opt. Lett., Vol. 25, 405-407 (2000).

[5] B. Chann, I. Nelson, and T. G. Walker, “Frequency-narrowed external-cavity diode-laser-array bar,” Opt. Lett., Vol. 25, 1352-1354 (2000).

[6] Y. Liu, G. Bitton, P. Cheinet, W. R. Garrett, and Y. Braiman, “Enhancement of coherence and intensity in a broad-area semiconductor laser array with injection locking,” SPIE Photonics West, 4632-19, Jan., 2002.

[7] Y. Liu, H. K. Liu, and Y. Braiman, "Simultaneous injection of two broad area semiconductor lasers driven by a common current source", submitted to Opt. Lett.

[8] J. M. Liu and T. B. Simpson, “Four-wave mixing and optical modulation in a semiconductor laser,” IEEE J. Quantum Electron., Vol. 30, 957-965 (1994).